C21_ Curriculum

DIPLOMA IN ARITIFICIAL INTELLIGENCE AND MACHINE LEARNING

OFFERED BY

STATE BOARD OF TECHNICAL EDUCATION & TRAINING,

TELANGANA: HYDERABAD

II SEMESTER

Sl No	Course Code	Course Name	Teaching Scheme				Credits	Examination Scheme						
			Instruction periods per week			Total Periods per semester		Continuous internal evaluation			Semester end examination			
			L	T	P			Mid Sem 1	Mid Sem 2	Internal evaluation	Max Marks	Min Marks	Total Marks	Min marks for Passing including internal
1	HU-201	Advanced English	3	2	0	75	3	20	20	20	40	14	100	35
2	SC-202	Engineering Mathematics	4	1	0	75	3	20	20	20	40	14	100	35
3	SC-203	Applied Physics	4	1	0	75	3	20	20	20	40	14	100	35
4	SC-204	Engineering Chemistry & Environmental	4	1	0	75	3	20	20	20	40	14	100	35
5	CS-205	Programming In C	3	2	0	75	3	20	20	20	40	14	100	35
6	ME-206	Advanced Engineering Drawing	1	0	2	45	1.5	20	20	20	40	20	100	50
7	ME-207	Advanced AutoCAD Lab	1	0	2	45	1.5	20	20	20	40	20	100	50
8	EC-208	Semiconductor Devices Lab	1	0	2	45	1.5	20	20	20	40	20	100	50
9	SC-209	Applied Science Lab	1	0	2	45	1.5	20	20	20	40	20	100	50
10	CS-210	Programming in C Lab	1	0	2	45	1.5	20	20	20	40	20	100	50
11	AI-211	Skill Upgradation	0	0	8	120	2.5	0	0	Rubrics			--	-
	Activities: student performance is to be assessed through Rubrics													

HU-201_Advanced English

Course Title	Advanced English	Course Code	HU-201
Semester	II	Course Group	Foundation
Teaching Scheme in Minutes (L:T)	4:1:0	Credits	3
Methodology	Communicative Language Teaching + Assignments	Total Contact Hours	75
CIE	60 Marks	SEE	40 Marks

Prerequisites: Basic knowledge of English Language and Listening, Speaking, Reading and Writing skills.

COURSE CONTENTS

MODULE 1: VOCABULARY

Periods: 12 (L-9 T-3)

1. How to Learn a New Word
   a) Spelling, pronunciation, syllabification, word class, inflections and the other forms of the word,
   b) Meanings, usage, derivatives, idiomatic expressions, context for using the word and compound words.
   c) Phrasal verbs, etymology, word families, collocations.
2. Synonyms, Antonyms and One Word Substitutes
3. Prefixes, Suffixes and Roots

MODULE 2: READING

Periods: 12 (L-8 T-4)

Unit 1:

Innovation, Science and Technology: Process, Cause and Effect, Problem Solution, Evaluation of ideas, reasons and conclusion. (Focus on One-word Substitutes / Scientific terms/ Analyses/ Application/ meanings/ synonyms)

Unit 2:

Descriptive: Biography, Travel Writing, Nature Writing and Journal (Focus on Analysis/ Vocabulary/ Noun / Verbs/ Adjectives / Chronological order).

Unit 3:

Reading for Pleasure: Story / Fable / Drama (Focus on factual, main idea, sequencing, inferring, morals and values).

NOTE: Each reading unit should contain the following word limit.

a) Paragraph should contain minimum 50 words for answering one mark question.
b) Paragraph should contain minimum 100 words for answering three one-mark questions.

c) Paragraph should contain minimum 150 words for answering five one-mark questions.

MODULE 3: SPEAKING

Periods: 12 (L-8 T-4)

1. Fixing, Cancelling and Rescheduling the Appointments.
   (Focus on using expressions to fix, cancel and reschedule an appointment)
2. Extending, Accepting and Declining Invitations.
   (Focus on using expressions in conversations)
3. Giving Instructions.
4. Asking for and Giving Directions.
5. Describing Objects.
   a) Use adjectives (Size, shape, colour, weight/ quantity, feel or touch, material, taste, state, purpose/uses)
6. Talking about the Past.
   a) Events, Incidents and Situations using past tense and passive voice.
7. Offering Help, Opinions and Suggestions.

MODULE 4: WRITING-I

Periods: 13 (L- 8 T-5)

1. Mechanics of Writing
   a) Spelling, punctuation, capitalization and special symbols.
   b) Fonts type, font size, bold, italics, underline, superscript, subscript, alignment, margins.

2. Data Interpretation -I

   a) Understand the information and analyze the flow charts and stating the main idea.
   b) Describe the process (events or chronological order) interpret flow chart.
   c) Use connectives and sequence markers, writing a meaningful paragraph.

3. Data Interpretation -II
   a) Understand the information in a tree diagram and analyze the data.
   b) State the main idea and describe the process from key word.
   c) Explain one branch completely and move to the branches down words and write horizontal direction.
   d) Use linkers and sequence markers.

4. Data Interpretation –III
   a) Understand the data given in a table and pie charts.
   b) Analyze and state the main idea of the table and pie charts.
   c) Identify the similarities, differences and mention figures.
   d) Use linkers.

MODULE 5: GRAMMAR **Periods: 14 (L-9 T-5)**

a. Reported Speech.
b. Conversion from Direct to Indirect speech but not vice versa.
c. Error Analysis on nouns, pronouns and verbs.
d. Error Analysis on articles, adjectives, adverbs, nouns, Prepositions, Spellings, Concord and Connectives.
e. Error Analysis on Questions, Vocabulary, Homophones and other kinds of

errors.

MODULE6: WRITING-II **Periods: 12 (L-8 T-4)**

1. Writing a Resume
   a) Different formats of a resume.
   b) Analyze strengths and weaknesses.
2. Writing a Cover Letter
   a) Importance of cover letter.
   b) Format of cover letter.
   c) Write a Cover letter as per given direction.
3. Note Making
   a) Understand the Benefits of Note-Making.
   b) Cue Method.
   c) Mind – Mapping or Pattern Note-Making.
   d) Cornell Method.
   e) Exercises should be given on how to make notes to practice in the classroom.
4. Writing a Report
   a) Understand the concept of report writing and formats of various reports.
   b) Report on an incident.
   c) Technical reports.
   d) Report on an industrial visit.
   e) General reports.
   f) Report on events.
   g) Revising and editing reports (features of good report writing).
5. Writing an Email
   a) Structure of personal e-mail.
   b) Composition and structure of professional e-mail (subject line, greetings, e-mail text, closing).
   c) Proof reading email.
   d) Strategies to write Email text.
   e) Do’s and don’ts of e-mail writing.

COURSE OUTCOMES

CO NO	At the end of the course the students will have the ability to
201.1	Learn vocabulary and use them in professional and social interactions.
201.2	Comprehend the main idea and minute details related to engineering courses.
201.3	Communicate effectively in English in terms of basic sciences, mathematics and engineering fundamentals.
201.4	Learn English grammar to speak and write flawlessly so as to interpret the data.
201.5	Learn the mechanics of writing to make the technical writing practical and meaningful.
201.6	Make notes, write resumes, prepare cover letters, write technical emails and draft reports.

CO-PO Matrix

CO	PO1	PO2	PO3	PO4	PO5	PO6	PO7	Mapping POs
201.1	-	-	-	-	3		3	5,7
201.2	-	-	-	-	3	2	3	5,6,7
201.3	-	-	-	-	3	3	3	5,6,7
201.4	-	-	-	-	2	2	3	5,6,7
201.5	-	-	-	-	2	2	3	5,6,7
201.6		-	--	--	2		3	5,7

Test	Units	Marks	Pattern
Mid Sem- I	1. Vocabulary 2. Reading	20	Part A: 4 short answer questions Part B: 2 short essay questions with internal choice Part C: 2 essay questions with internal choice
Mid Sem - II	1. Speaking 2. Writing-1	20	Part A: 4 short answer questions Part B: 2 short essay questions with internal choice Part C: 2 essay questions with internal choice
Slip Test 1	1. Vocabulary 2. Reading	5	2 questions out of 3 questions
Slip Test 2	1. Speaking 2. Writing-1	5	2 questions out of 3 questions
Assignment	One assignment per one semester	5	Different group assignments of higher order questions that develop problem solving skills and critical thinking should be given
Seminars	One seminar per one semester	5	Oral presentations using audio –visual equipment, charts, etc.
	Total	**60**	

MID SEM - I EXAM					
S. No.	Unit Name	R	U	A	Remarks
1	Unit - I	1, 2	5 (a) 5 (b)	7 (a) 7 (b)	
2	Unit - II	3, 4	6 (a) 6 (b)	8 (a) 8 (b)	
Total Questions		4	4	4	

MID SEM - II EXAM					
S. No.	Unit Name	R	U	A	Remarks
1	Unit - I	1, 2	5 (a) 5 (b)	7 (a) 7 (b)	
2	Unit - II	3, 4	6 (a) 6 (b)	8 (a) 8 (b)	
Total Questions		4	4	4	

SEMESTER END EXAM							
Sl. NO.	Unit No.	Question to be set for SEE					Remarks
		R			U	A	
1	I	4	1		9 (a)	13 (a)	
2	II						
3	III		2		10 (a)	14 (a)	
4	IV						
5	V		3	5, 6	9 (b)	13 (b)	
					11 (a)	15 (a)	
					11 (b)	15 (b)	
6	VI			7, 8	10 (b)	14 (b)	
					12 (a)	16 (a)	
					12 (b)	16 (b)	
Total Questions		8			8	8	

Legend:

Remembering: one mark
Understanding: three marks
Application: five marks

Suggested Learning Outcomes:
On completion of the course the students will be able to:

- Enhance their vocabulary.
- Learn synonyms, antonyms and use one-word substitutes.
- Read and understand main ideas and answer the questions.
- Communicate effectively in various situations.
- Fix, cancel and reschedule appointments.
- Extend, accept and decline invitations.
- Give instructions and directions.
- Describe objects.
- Talk about past incidents/experiences.
- Offer help, opinions and suggestions.
- Write in reported speech.
- Identify and correct common errors.
- Interpret data and write a paragraph.
- Learn to prepare cover letter and resume.
- Make notes, write reports and write emails.
- Confidently take diploma based competitive exams in terms of General English.

Suggested Student Activities:

- Practice conversation / dialogue / speech and answer the questions.
- Group Discussions.
- Seminars.
- Review a movie.
- Review a book.
- Narrating a story.
- Chain stories.
- JAM.
- Speak about incidents /events /memories /dreams /role model.
- Interview with famous personalities.
- Reading for main ideas and specific details.
- Summarizing.
- Picture description.
- Writing a recipe.
- Describing a process.
- Giving directions using maps.
- Surveys.
- Filling forms.
- e-mail etiquette.
- Preparing reports on field visits, experiments, projects.
- General English for competitive exams – Practice the previous year's question papers of SSC, RRB, TS TRANSCO, TSGENCO, etc.

REFERENCES:

1. Practical English Grammar by A.J Thomson and A.V. Martinet
2. A Course in Phonetics and Spoken English by J. Sethi and P.V Dhamija

3. Word Power Made Easy by Norman Lewis.
4. Keep Talking by Friederike Klippel.
5. More Grammar Games by Mario Rinvolucri and Paul Davis.
6. Essential English Grammar by Raymond Murphy.
7. Spoken English-A Self Learning Guide to Conversation Practice by V Sasi Kumar.

E-learning resources:

1. www.duolingo.com
2. www.bbc.co.uk
3. www.babbel.com
4. www.merriam-webster.com
5. www.ello.org
6. www.lang-8.com
7. youtube.com
8. Hello English (app)
9. mooc.org
10. https://onlinecourses.nptel.ac.in
11. https://www.indeed.com/career-advice/
12. Dictionary.com
13. Online Dictionaries
14. https://englishsentences.com
15. https://englishcub.com/vocabulary/dictionary-thesaurus.htm
16. TEDx talks.
17. Toastmasters International on YouTube.

BOARD DIPLOMA EXAMINATION (C-21)
II SEMESTER – MID EXAMINATION - I
HU-201 - ADVANCED ENGLISH

Time: 1 Hour **Total Marks: 20 Marks**

PART-A **4 X 1 = 4**

Instructions: *Answer all questions. Each question carries* ***one*** *mark.*

1. Write the other forms of the word for the following words.
   a) Impress
   b) Create
2. Write two examples of the root word "Tele" which means "far".
3. Read the following paragraph and answer the question that follows.

Each one of us must realize that the only future for India and her people is one of tolerance and co-operation which has been the basis of our culture from ages past. We have laid down in our constitution that India is secular state. This does not mean we are irreligious. It means equal respect for all faiths and equal opportunities for those profess faith.

   a) What is the basis of our culture?

4. Read the following paragraph and answer the question that follows.

The sun rises and sets at different times in different places. As the earth rotates from west to east, places in the east see the sun earlier than those in the west. If the earth were flat, the whole world would have sunrise and sunset at the same time. But we know this is not so.

   a) Why the places in the east see the sunrise earlier than the places in the west?

PART-B **2 X 3 = 6**

Instructions*: Answer the following questions. Each question carries* ***three*** *marks.*

5. i) Use the following idioms in your own sentences.
   a. once in a blue moon
   b. beyond wildest dreams
   c. turn a deaf ear

(OR)

ii) Form antonyms for the given words using prefixes.
   a) Loyal
   b) Legal
   c) necessary

6. i) Read the following paragraph and answer the questions that follow.

Punctuality helps us to plan our work in advance and also enables us to do a lot of work. On the other hand, if we are unpunctual or the others are not punctual, everything gets upset and we are not able to do much of a work in a day. Our mood is upset. When others are unpunctual, we curse them and vice versa. If we are punctual, we make things smooth for ourselves and others and so we earn the appreciation and respect of others. So, punctuality is a quality that should be cultivated by every Indian. The derisive expression "Indian Punctuality" should go, once and for all, from usage.

   a) How does punctuality help us?
   b) Write the antonym of the word 'curse'.
   c) When do we earn the appreciation and respect of others?

(Or)

ii) Read the following passage and answer the questions that follow.

Incredible innovations in robotics are taking place in Japan, in attempt to make the lives of the aged more comfortable. One company is developing a bed that transforms into a wheelchair. The bed splits in half, with one half folding into a chair and removing the need to lift someone out of the bed and into a wheelchair. Another company has developed Robear, a high-tech robot which uses 'paws' to help elderly people to get up or lift them out of bed into a wheelchair. These robots are prohibitively expensive at present, but the costs are expected to decrease over the years.

a) What is the synonym of the word incredible?
b) How does Robear help elderly people?
c) What is the antonym of the word expensive?

PART-C **2x5 = 10**

***Instructions**: Answer the following questions. Each question carries **five** marks.*

7. i) Write five things you learn from a word with suitable examples.

(OR)

ii)) Write one- word substitutes of the following definitions.

a. A study of some one's life written by another person.
b. People who work in the same organization or office.
c. Confinement to one place to prevent the spread of infection.
d. One who looks at bright side of things.
e. A person who fits and repairs water pipes.

8. i) Read the following passage and answer the questions that follow.

Stephen Hawking was born in Oxford on 8th Jan 1942. He joined the University College, Oxford where he studied Physics, as a subject of his first choice, Mathematics was unavailable. He pursued his Ph.D., despite being diagnosed with amyotrophic lateral sclerosis (ALS), a rapid progressive disease that cripples all nerves and muscles, in 1985, he became ill with pneumonia and since then he was required 24-hour nursing care. Through his incredible determination and with the help of his family and associates, he continued to pursue research, write books, give lectures, travel widely and inspired millions of persons. His research on black holes, and his books like "A brief History of Time", "Black Holes", "Baby Universe ", bear testimony to the fact that he is a unique person with extraordinary mind.

a. What did Stephen Hawking study in Oxford?
b. What did Hawking want to study actually?
c. Name the disease Hawking was diagnosed with when he was just a student.
d. What happened because of his illness in 1985?
e. Name two of Hawking's books and the area of his research.

Or

ii) Read the following passage and answer the questions that follow.

Nelson Mandela was born on 18th July 1918 in South Africa. He had thirteen siblings by the same father but different mothers. His father died when he was nine. He was the first member of his family who was sent to school. In 1941 he was expelled from university because he led a group of students on a political strike.

Mandela was sent to prison for life in 1962 for protesting the poverty, in equality and racism against black people in South Africa during apartheid. The apartheid was when people were divided by their race and forced to live separately. Black people could not do the same things as white people, such as going to certain places or voting. Mandela stayed in Prison for 27 years of his life

until 1990, when there was greater political freedom in South Africa, and he was set free. He received the Noble Peace Prize in 1993 and in 1994 he was elected as the first black South African president. He lived a simple life, donated lots of money to charity. He retired from public life in 2004. He passed away on 5th December 2013. He will be remembered as a man who encouraged people to live more loving lives and who took a stand against injustice.

a. Why was Nelson Mandela expelled from university?
b. Why was he sent to prison for life?
c. How many years did he stay in the prison?
d. How is he remembered by the people?
e. Select the word from the passage that gives the meaning “a person’s brothers or sisters”.

BOARD DIPLOMA EXAMINATION (C-21)
II SEMESTER – MID EXAMINATION - II
HU-201- ADVANCED ENGLISH

Time: 1 Hour **Total Marks: 20 Marks**

PART-A **4 X 1=4**

Instructions: *Answer all questions. Each question carries* ***one*** *mark.*

1. How do you fix an appointment with a doctor on phone? Write in a sentence.
2. How do you invite your friend to your sister's marriage? Write in a sentence.
3. Write a short paragraph based on the pie chart given below.

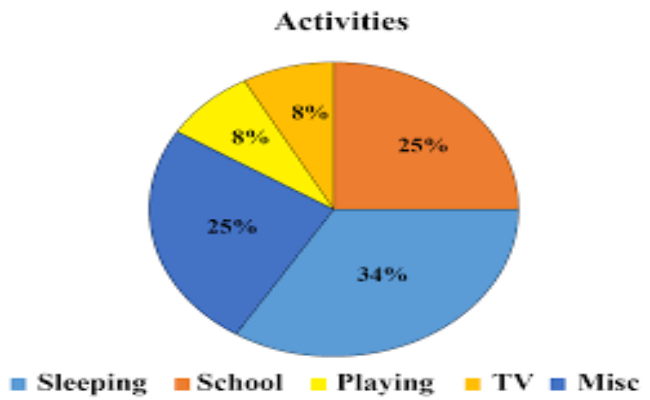

4. Rewrite the following sentence using appropriate punctuation marks and capital letters.
   (i) he said to rohit did you buy english textbook

PART-B **2X3=6**

Instructions*: Answer the following questions. Each question carries* ***three*** *marks.*

5. a) Write a short paragraph on a memorable incident or event of your school days.

(OR)

b) Describe desk top computer using appropriate words.

6. a) Rewrite the following sentences using appropriate punctuation marks and capital letters.
   (ii) this is my cousins phone.
   (iii) i have an xmas tree.
   (iv) Do you believe in god.

(OR)

b) Write a short paragraph on the following tree diagram.

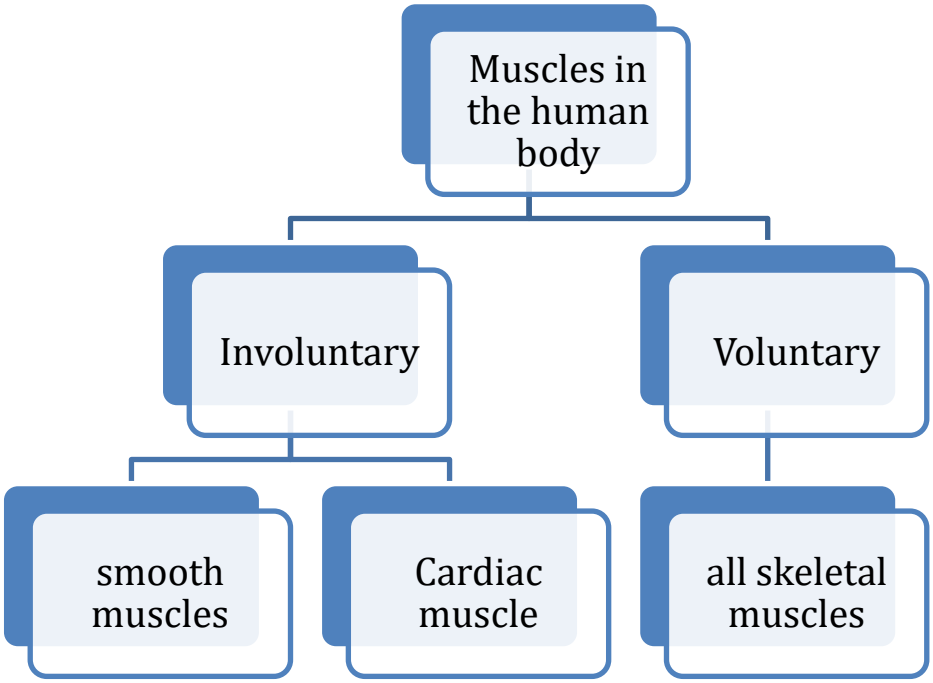

PART-C **2x5 = 10**

Instructions*: Answer the following questions. Each question carries* ***five*** *marks.*

7. a) Write instructions for opening an account in a bank.

(OR)

b) Give suggestions to your brother on how to improve English communication skills.

8. a) Write a paragraph using the information in the following table.

Human Teeth

Incisors	**Canine**	**Premolars**	**Molars**
Cut and bite food	Hold and tear food	Crush and grind food	Grind food

(OR)

b) Draw a flow chart of sending an e-mail and write a paragraph on it.

BOARD DIPLOMA EXAMINATION (C-21)
II SEMESTER - SEMESTER END EXAMINATION
HU-201- ADVANCED ENGLISH

Time: 2 Hours **Total Marks: 40 Marks**

PART-A **8 X 1 = 8**

Instructions: *Answer all questions. Each question carries **one** mark.*

1. Write one- word substitutes of the following definition
   a) Great lover of books.
   b) Something cannot be read.
2. You saw that your friend was suffering from fever and unable to go to hospital. (Offer help)
3. Subha said, "I can sing songs". (Change it into indirect speech)
4. Write the correct spelling of the following words.
   a) Enthuciastic
   b) Challenje
5. Correct the following sentences.
   a) I bought seven goldfishes.
   b) Ramana prefers coffee than tea.
6. Correct the following sentences.
   a) When did she visit her grandmother?
   b) It is very hot.
7. What will you write under skills/tools section in your resume?
8. What do you write under closing section in a professional email?

PART-B **4x3 = 12**

Instructions: *Answer the following questions. Each question carries **three** marks.*

9. a) Explain the following features of any word and give one example to each feature.
   (i) Meanings
   (ii) Inflections
   (iii) Compound words

(OR)

   b) Correct the following sentences.
   (i) Pavani is a cleverest girl in our institute.
   (ii) Latha has bought books three days ago.
   (iii) He works hardly.

10. a) Describe your smart phone using six describing words.

(OR)

   b) Write your strengths and limitations.

11. a) Change the following sentences into indirect speech.
   (i) Vimala said, "the sun rises in the East".
   (ii) Robert said to Ajay, "When will you pay the examination fee?"
   (iii) Hari said, "I have seen Charminar".

(OR)

   b) Correct the following sentences.
   (i) We discuss about tenses.

(ii) He is awaiting for the orders.
(iii) Mount Everest is the most highest peak in the world.

12. a) Read the following paragraph and make notes using Cue Method.

We all knew that "we are what we eat". So, a healthy diet may improve optimal health. In nutrition, diet is the sum of food consumed by a person or other organism. The word diet often implies the use of specific intake of nutrition for health or weight-management reasons. Complete nutrition requires ingestion and absorption of vitamins, minerals, essential amino acids from protein and essential fatty acids from fat-containing food, also for energy in the form of carbohydrate, protein and fat. Dietary habits and choices play a significant role in the quality of life, health and longevity. Many surveys recommend that people maintain a normal weight by limiting consumption of energy-dense foods and sugary drinks, eating plant- based food, red meat and alcohol intake. A particular diet may be chosen to promote weight loss or weight gain. If a person is overweight or obese, changing to a diet and lifestyle that allows them to burn more calories than they consume may improve their overall health by preventing diseases.

(OR)

b) Write an e-mail to your friend requesting him or her to help you in completing your project work.

Part-C

5 X 4 = 20M

Instructions: *Answer the following questions. Each question carries* ***five*** *marks.*

13. a) Read the following paragraph and answer the questions that follow.

Florence Nightingale rendered a unique service when the call came to her from the government to help the wounded and the suffering in the hospital at Scutari during the Crimean War. The conditions in the hospital were horrible. There was dust, indifference and inefficiency. There was hospitality to a woman who was assuming such a great pubic responsibility. It was an insult to the vanity of men. They raised all possible obstacles in the way. But she was an autocrat. She bore down and swept away all opposition.

The hospital became an ideal place and the wounded soldiers worshipped her like an angel. The 'lady with the lamp', as the soldiers lovingly called her, became a national heroine. The nation showed its gratitude to her by raising a huge sum for her benefit, but Florence showed herself to be greater by contributing that sum for the setting up of an institution for the training of nurses. Her ambition was not merely to build a profession of nurses but an entire nation of nurses. And she succeeded admirably in her mission.

Questions:

(i) Why did government call Florence Nightingale?
(ii) How were the conditions in the hospital?
(iii) What was her ambition?
(iv) Write the synonym of the word 'unique'.
(v) Write one word substitute for the following definition:
A ruler who has absolute power.

(OR)

b) Correct the following sentences:

(i) The book is belonging to him.

(ii) The price of gold is more expensive than silver.
(iii) When you are coming?
(iv) Kamala sat besides Vinaya.
(v) I requested the clerk to refund back my deposit.

14. a) Read the table and write a paragraph based on the details.

Year	Female Literacy	Male Literacy	Literacy rate
1961	15.35%	40.45%	28.30%
1971	21.97%	45.96%	34.45%
1981	29.76%	56.38%	43.57%
1991	39.29%	63.13%	52.21%
2001	54.67%	75.26%	64.84%
2011	65.46%	82.14%	74.04%

(OR)

(b) Write a resume to apply for the post of Sub-Engineer in TSGENCO.

15. a) Change the following into indirect speech.
(i) Ganesh says, “I am coming”.
(ii) Madhu said to Sahasra, “I prefer Science fiction”.
(iii) Hari said, “ I shall learn English language”.
(iv) Ravi said to Srikara, “Why did you go to Hyderabad yesterday?”
(v) Hanuma said to Bhoomika, “Are you a teacher?”

(OR)

b) Read the following paragraph and make necessary corrections.

Myself is Abhay. My age is 16 years old. Every day I am getting up in the morning at 6.00 a.m. I am eaten breakfast at 7:30 a.m. I go to Polytechnic by walk. Umesh is my cousin brother. Umesh and me play cricket in the evening. We both drinks coffee at 6:30 p. m. He taught physics every day at 7:00p.m. I see television for an hour in the night.

16. a) Write a cover letter to the Managing Director, Nagarjuna Cements, Karimnagar, applying for the post of Assistant Executive Engineer.

(OR)

b) Write a report to your Head of the section on an industry you visited

SC-202 - ENGINEERING MATHEMATICS

Course Title	Engineering Mathematics	Course Code	SC-202
SEMESTER	II	Course Group	Foundation
Teaching Scheme in periods (L : T : P)	4:1: 0	Credits	3 Credits
Methodology	Lecture + Tutorial	Total Contact Periods	75
CIE	60 Marks	SEE	40 Marks

Pre requisites:

This course requires the basic knowledge of Algebra, Trigonometry in Mathematics at Secondary school level and Basic Engineering Mathematics at Diploma 1st Semester level

Course Outcomes: COs

At the end of the course, the student will have the ability to:

CO 1	Formulate the equations of Straight Line, Circle and Conic Sections
CO 2	Evaluate the Limits of different Functions
CO 3	Determine the Derivatives of Various Functions
CO 4	Find the Successive Derivatives and Partial Derivatives of Functions
CO 5	Use Differentiation in Geometrical Applications
CO 6	Use Differentiation in real life applications and for finding Maxima and Minima.

Course Contents:

Co-ordinate geometry

Unit – I

Duration: 12Periods (L: 9– T: 3)

1. **Straight lines:** Write the different forms of a straight line – point slope form, two point form, intercept form, normal form and general form - Find distance of a point from a line, acute angle between two lines, intersection of two non-parallel lines and distance between two parallel lines - perpendicular distance from a point to a line - Solve simple problems on the above forms
2. **Circle:** Define locus of a point, circle and its equation. Find equation of the Circle given (i) Centre and radius, (ii) two ends of a diameter (iii) Centre and a point on the circumference (iv) three non collinear points and (v) Centre and tangent equation - general equation of a circle - finding Centre, radius - tangent, normal to circle at a point on it - simple problems.

Unit – II

Duration: 10Periods (L: 8 – T:2)

1. **Conic Sections:** Define a conic section, focus, directrix, eccentricity, axes and latus rectum – Find equation of a conic when focus, directrix and eccentricity are given. Properties of parabola, ellipse and hyperbola - standard forms with Vertex (Centre) at the Origin and Axis (Axes) along Co – Ordinate Axes only – Simple Problems.

Differential Calculus
Unit-III

Duration: 14Periods (L: 12– T:2)

1. **Functions &Limits :** Concept of Limit- Definition- Properties of Limits and Standard Limits (without proof) - $\lim_{x\to a}\frac{x^n-a^n}{x-a}$, $\lim_{x\to 0}\frac{\sin x}{x}$, $\lim_{x\to 0}\frac{\tan x}{x}$, $\lim_{x\to 0}\frac{a^x-1}{x}$, $\lim_{x\to 0}\frac{e^x-1}{x}$, $\lim_{x\to 0}(1+x)^{\frac{1}{x}}$, $\lim_{x\to\infty}\left(1+\frac{1}{x}\right)^x$ - Simple Problems. Evaluate the limits of the type $\lim_{x\to l}\frac{ax^2+bx+c}{\alpha x^2+\beta x+\gamma}$ and $\lim_{x\to\infty}\frac{f(x)}{g(x)}$

2. **Differentiation – I: Concept** of derivative - definition from first principle as $\lim_{h\to 0}\frac{f(x+h)-f(x)}{h}$ - different notations - derivatives of elementary functions like x^n a^x, e^x, log x, sin x, Cos x, Tan x, Sec x, Cosec x and Cot x .Derivatives of sum, product, quotient, scalar multiplication of functions - problems. Derivative of function of a function (Chain rule) with illustrative examples such as

   (i) $\sqrt{t^2+\frac{2}{t}}$ **(ii)** $x^2\sin 2x$ **(iii)** $\frac{x}{\sqrt{x^2+1}}$ **(iv)** $\log\left(\sin(\cos x)\right)$.

Unit – IV **Duration: 10Periods (L: 8 – T: 2)**

1. **Differentiation – II:** Derivatives of inverse trigonometric functions, derivative of a function with respect to another function, derivative of parametric functions, derivative of hyperbolic, implicit functions, logarithmic differentiation – problems in each case. Higher order derivatives - examples – functions of several variables – partial differentiation, Euler's theorem-simple problems.

Applications of Derivatives:

Unit – V **Duration: 14Periods (L: 11– T:3)**

1. **Geometrical Applications:** Geometrical meaning of the derivative, equations of Tangent and normal to a curve at any point on the curve. Lengths of tangent, normal, sub tangent and subnormal to the curve at any point on it. Angle between two intersecting curves - problems.

Unit – VI **Duration: 15Periods (L:12– T:3)**

1. **Physical Applications:** Physical applications of the derivative – Explain the derivative as a rate of change in distance-time relations to find the velocity and acceleration of a moving particle with examples. Explain the derivative as a rate measure in the problems where the quantities like volumes, areas vary with respect to time- illustrative examples– Simple Problems.

2. **Maxima & Minima:** Applications of the derivative to find the extreme values – Increasing and decreasing functions, finding the maxima and minima of simple functions - problems leading to applications of maxima and minima.

References

1. Co - Ordinate Geometry – by S.L. Loney
2. Thomas Calculus, Pearson Addison – Wesley Publications
3. Calculus – I By Shanti Narayan and Manicavachagam Pillai, S.V Publications.
4. NCERT Mathematics Text Books of Class XI, XII.
5. Intermediate Mathematics Text Books (Telugu Academy)

Suggested E-Learning references

1. www.freebookcentre.net/mathematics/introductory-mathematics-books.html
2. E- books : www. mathebook.net

Suggested Learning Outcomes

At the end of the course, the student will have the ability to:

Coordinate Geometry

Unit – I

1.0 Solve the problems on Straight lines:

1.1 Understand the different forms of a straight line – point slope form, two point form, intercept form, normal form and general form

1.2 Solve simple problems on the above forms

1.3 Find distance of a point from a line, acute angle between two lines, intersection of two non-parallel lines and distance between two parallel lines.

Solve the problems on Circles:

1.4 Define locus of a point, circle and its equation.

1.5 Find the equation of a circle given

(i) Centre and radius

(ii) Two ends of a diameter

(iii) Centre and a point on the circumference

(iv) Three non collinear points

(v) Centre and tangent

1.6 Write the general equation of a circle and find the centre and radius.

1.7 Write the equation of tangent and normal at a point on the circle.

1.8 Solve the problems to find the equations of tangent and normal.

Unit – II

2.0 Appreciate the properties of Conics in engineering applications:

2.1 Understand the concept of a conic section.

2.2 Understand the terms focus, directrix, eccentricity, axes and latus rectum of a conic with illustrations.

2.3 Find the equation of a conic when focus, directrix and eccentricity are given

2.4 Describe the properties of Parabola, Ellipse and Hyperbola

2.5 Solve problems in simple cases of Parabola, Ellipse and Hyperbola.

Differential Calculus

UNIT - III

3. Use the concept of Limit for solving the problems

3.1 Understand the concept of limit and meaning of $\lim_{x\to a} f(x)=l$ and state the properties of limits.

3.2 Mention the Standard limits $\lim_{x\to a}\frac{x^n-a^n}{x-a}$, $\lim_{x\to 0}\frac{\sin x}{x}$, $\lim_{x\to 0}\frac{\tan x}{x}$, $\lim_{x\to 0}\frac{a^x-1}{x}$, $\lim_{x\to 0}\frac{e^x-1}{x}$, $\lim_{x\to 0}(1+x)^{\frac{1}{x}}$, $\lim_{x\to\infty}\left(1+\frac{1}{x}\right)^x$

3.3 Solve the problems using the above standard limits

3.4 Evaluate the limits of the type $\lim_{x\to l}\frac{ax^2+bx+c}{\alpha x^2+\beta x+\gamma}$ and $\lim_{x\to\infty}\frac{f(x)}{g(x)}$

3.0 Appreciate Differentiation and its meaning in engineering situations

3.5 Understand the concept of derivative of a function y = f(x) – definition, first principle as $\lim_{h\to 0}\frac{f(x+h)-f(x)}{h}$ and also provide standard notations to denote the derivative of a function.

3.6 Know the significance of derivative in scientific and engineering applications.

3.7 Find the derivatives of elementary functions like x^n, e^x, a^x, log x, sin x, cos x, tan x, Sec x, Cosec x and Cot x using the first principles.

3.8 Find the derivatives of simple functions from the first principle.

3.9 Use the rules of differentiation of sum, difference, scalar multiplication, product and quotient of functions to solve simple problems.

3.10 Find the derivatives using the method of differentiation of a function of a function (Chain rule)

Unit – IV

4.0 Appreciate Differentiation and its meaning in engineering situations

4.1 Find the derivatives of Inverse Trigonometric functions.

4.2 Understand the method of differentiation of a function with respect to another function and also differentiation of parametric functions.

4.3 Find the derivatives of hyperbolic functions.

4.4 Use the above procedures for finding the derivatives of implicit function with examples.

4.5 Use logarithms for differentiating some functions with examples like [f(x)]g(x).

4.6 Use the concept of the higher order derivatives of second and third order to solve problems in engineering.

4.7 Use the concept of functions of several variables, partial derivatives to solve simple examples.

4.8 Use Euler's theorem for homogeneous functions to solve simple problems of partial derivatives.

Applications of Differentiation

UNIT - V

5.0 Understand the Geometrical Applications of Derivatives

5.1 State the geometrical meaning of the derivative as the slope of the tangent to the curve y=f(x) at any point on the curve.

5.2 Use the concept of derivative to find the slope of tangent and to find the equation of tangent and normal to the curve y = f(x) at any point on it.

5.3 Find the lengths of tangent, normal, sub-tangent and sub normal at any point on the curve y=f(x)

5.4 Use the concept of angle between two curves and procedure for finding the angle between two given curves with illustrative examples.

Unit – VI

6. Understand the Physical Applications of Derivatives

6.1 Explain the derivative as a rate of change in distance-time relations

6.2 To find the velocity and acceleration of a moving particle using the derivative. Use derivative as a rate measurer in the problems where the quantities like volumes, areas vary with respect to time.

6.0 Use Derivatives to find extreme values of functions

6.3 Identify the increasing and decreasing functions.

6.4 Use the conditions to find points where the given function is increasing or decreasing.

6.5 Find the extreme values (maxima or minima) of a function of single variable – Solve simple problems yielding maxima and minima.

6.6 Solve problems on maxima and minima in applications like finding areas, volumes, etc.

Suggested Student Activities

1. Student visits Library to refer Standard Books on Mathematics and collect related material.
2. Quiz
3. Group discussion
4. Surprise tests
5. Seminars
6. Home assignments.
7. Mathematics for preparing competitive exams . Solving old question papers on arithmetical ability.

CO / PO - MAPPING

CO	PO1	PO2	PO3	PO4	PO5	PO6	PO7	Mapped POs
CO1	3	1					3	1,2,7
CO2	3	2					3	1,2,7
CO3	3	2	2				3	1,2,7
CO4	3	2	2				3	1,2,7
CO5	3	2	2				3	1,2,7
CO6	3	2	3				3	1,2,7

MID SEM-I EXAM

S.No	Unit Name	R	U	A	Remarks
1	Unit-I		5(a) 5(b)	7(a) 7(b)	
2	Unit-II	3, 4	6(a) 6(b)	8(a) 8(b)	
Total Questions		4	4	4	

MID SEM –II EXAM

S.No	Unit Name	R	U	A	Remarks
1	Unit-III	1, 2	5(a) 5(b)	7(a) 7(b)	
2	Unit-IV	3, 4	6(a) 6(b)	8(a) 8(b)	
Total Questions		4	4	4	

Semester End Examination

Sl No	Unit No.	Questions to be set for SEE					Remarks
		R			U	A	
1	I	4	1		9(a)	13(a)	
2	II						
3	III		2		10(a)	14(a)	
4	IV						
5	V		3	5, 6	9(b) 11(a) 11(b)	13(b) 15(a) 15(b)	
6	VI			7,8	10(b) 12(a) 12(b)	14(b) 16(a) 16(b)	
Total Questions		8			8	8	

Legend:	Remembering (R)	1 Mark
	Understanding (U)	3 Marks
	Application (A)	5 Marks

BOARD DIPLOMA EXAMINATIONS (C21)
MID SEMESTER EXAMINATIONS – I
SC-202- ENGINEERING MATHEMATICS

TIME: 1: 00 Hour **Max. Marks: 20**

PART-A

Instructions: 1. Answer **ALL** questions 04 X 01 = 04

2 Each question carries **ONE** mark

1. Write the equation of a straight line in intercept form.
2. Write the equation of circle whose centre (h, k) and radius r given.
3. Define conic section.
4. Find the latus rectum of the parabola $y^2 = 6x$

PART-B

Instructions: 1. Answer any **TWO** questions 02 X 03 = 06
2. Each question carries **THREE** marks

5. a) Find the distance between parallel lines 3x + 4y + 5 = 0 and 3x +4y + 8 = 0

OR

b) Find the centre and radius of the circle $x^2 + y^2 - 6x + 4y - 12 = 0$.

6. a) Find the vertex, focus, equation of directrix and length of latus-rectum of the parabola $y^2 = 20x$

OR

b) Find the centre, vertices and foci of Ellipse $\frac{x^2}{36} + \frac{y^2}{25} = 1$

PART C

Instructions: 1. Answer any **TWO** questions 2 X 05 = 10
2. Each question carries **FIVE** marks

7. a) Find the angle between the lines 2x – y + 3 = 0 and x + y – 2 = 0

OR

b) Find the equation of the Circle passing through the points (0, 0), (1, 0) and (0,2)

8. a) Find the equation of the Parabola with focus at (2, -3) and whose directrix is 3x – 4y + 16 = 0

Or

b) Find the Centre, Vertices, Eccentricity, Foci, Lengths of axes, Length of Latus Rectum, and equations of directrices of the Hyperbola $\frac{x^2}{16} - \frac{y^2}{9} = 1$

@@@

BOARD DIPLOMA EXAMINATIONS (C21)
MID SEMESTER EXAMINATIONS - II
SC-202- ENGINEERING MATHEMATICS

TIME: 1: 00 Hour **Max. Marks: 20**

PART-A

Instructions: 1. Answer **ALL** questions 04 X 01 = 04
2 Each question carries **ONE** mark

1. Evaluate $\underset{x\to 0}{Lt}\dfrac{2x^3-3x^2+1}{9x^2+8x+7}$
2. Differentiate $3\log x + \sec x$ w. r. t. x
3. Differentiate log (sin x) w..r..t x
4. Find $\frac{\partial u}{\partial x}$ $if\ U = 2x^2 + 3y^2$

PART-B

Instructions: 1. Answer any **TWO** questions 02 X 03 = 06
2. Each question carries **THREE** marks

5. a) Evaluate: $\lim_{\theta\to 0}\left(\frac{1-cos\theta}{\theta sin\theta}\right)$

OR

b) If y = x sin x then find $\dfrac{dy}{dx}$

6. a) Find $\frac{dy}{dx}$ $if\ y = \sin^{-1}(3x-4x^3)$

OR

b) If $2x^2 + 3y^2 + xy = 5$, then find $\dfrac{dy}{dx}$

PART C

Instructions: 1. Answer ALL questions 02 X 05 = 10
2. Each question carries **FIVE** marks

7. a) Find $\dfrac{dy}{dx}$, If$x^y = e^{x-y}$

OR

b) If $x = a(\theta - sin\theta), y = a(1-cos\theta)$, $find\ \frac{dy}{dx}$

8. a) If $y = Sin(logx)$, $prove\ that\ x^2y_2 + xy_1 + y = 0.$

OR

b) If $U = Sin^{-1}\left(\frac{x^2+y^2}{x+y}\right)$ $then\ prove\ that\ x\frac{\partial u}{\partial x} + y\frac{\partial u}{\partial y} = tanu$

@@@

BOARD DIPLOMA EXAMINATION (C-21)
SEMESTER END EXAMINATIONS
SC-202-ENGINEERING MATHEMATICS

Time: 2 hours [Total Marks: 40]

PART-A

Instructions: 1. Answer **ALL** questions 08 X 01 = 08

2 Each question carries **ONE** mark

1. Write the equation of a straight line in slope intercept form.
2. Evaluate : $\lim_{x\to 3}\frac{x^3-27}{x-3}$
3. Write the conditions for an increasing function and a decreasing function of $f(x)$ in the interval $[a, b]$
4. Write the equation of a circle whose end points of diameter are (x_1, y_1) and (x_2, y_2)
5. Write the slope of a curve $y = f(x)$ at the point (x_1, y_1).
6. Define orthogonal curves.
7. Write the conditions for a point to be a maximum point on the curve $y = f(x)$.
8. Write the quantities to denote the rate of change of volume and area with respect to t.

PART-B

Instructions: 1. Answer any **FOUR** questions 04 X 03 = 12

2. Each question carries **THREE** marks

9. (a) Find the perpendicular distance of the point (2, 4) from the line $4x - 3y - 6 = 0$.

OR

(b) Find the lengths of the tangent, normal to the curve $y = x^2 + 2x + 1$ at (1, 4).

10. (a) $If\ y = (\tan^{-1} x)^2\ \ than\ find\ \frac{dy}{dx}$

OR

(b) A particle is moving along a line such that $s = \frac{1}{3}t^3 - 3t^2 + 8t + 5$. find its velocity and acceleration at $t = 3sec$.

11. (a) Find the equation of the normal to the curve $y = x^2 + 4x - 10$y at (2, 2).

OR

(b) Find the equation of the tangent to the curve $y = x^3 - 2x + 5$ at (1,4).

12. (a) Find the rate of change of Area of the circle with respect to the radius when $r = 4cm$.

OR

(b) Find the minimum value of $x^3 - 6x^2 + 9x + 1$

PART C

Instructions: 1. Answer any **FOUR** questions 04 X 05 = 20

2. Each question carries **FIVE** marks

13. (a) Find the equation of the parabola whose focus is the point (3, -4) and directrix is the line $x - y + 5 = 0$.

OR

(b) Find the angle between the curves $y^2 = 2x$, x + y = 8 at their point of intersection (2, 2)

14. (a) Find $\frac{dy}{dx}, if\ x = a(cos\theta + sin\theta), y = a(sin\theta - \theta cos\theta)$.

OR

(b) The sum of two numbers is 24. Find them if their product is maximum

15. (a) Find the lengths of the tangent, normal, sub tangent and sub normal to the curve $y = x^3 - 3x + 2\ at\ (0,2)$

OR

(b) Show that the curves $y^2 = x\ and\ y = \frac{k}{x}$ cut at right angles if $8k^2 - 1 = 0$.

16. (a) A circular metal plate expands by heat so that its radius is increasing at the rate of 0.02 cm/sec. At what rate its area is increasing when the radius is 10 cm.

OR

(b) A wire of length 40 cm is bent so that to has to form a rectangle. Find the maximum area that can be enclosed by the wire.

SC-203 - APPLIED PHYSICS

Course Title	Applied Physics	Course Code	SC-203
Semester	Semester-II	Course Group	Foundation
Teaching Scheme in Pds (L:T:P)	4:1:0	Credits	3
Type of course	Lecture + Tutorial	Total Contact Periods	75
CIE	60 Marks	SEE	40 Marks

Pre requisites: High School Science and Mathematics.

Course Objectives: After studying this course, the student will be able to understand and appreciate the role of Physics in different areas of engineering and technology.

Course outcomes: On successful completion of the course, the student will have the ability to attain below Course Outcomes (CO):

Course Outcomes	
CO1	Apply the knowledge of Simple Harmonic Motion to solve engineering problems
CO2	Understand the characteristics of waves, sound, Doppler effect, noise pollution and apply to engineering problems
CO3	Apply principles of magnetism and electricity as tools in engineering
CO4	Apply various electromagnetic radiations to engineering problems
CO5	Understand the principles of Laser, Optical fiber and nano technology and apply to engineering problems.
CO6	Apply the knowledge of Semiconductors to diodes and rectifiers.

CO	**PO1**	**PO2**	**PO3**	**PO4**	**PO5**	**PO6**	**PO7**
CO1	**3**	**1**	**-**	**-**	**-**	**-**	**2**
CO2	**3**	**1**	**-**	**1**	**-**	**-**	**2**
CO3	**3**	**1**	**-**	**-**	**-**	**-**	**2**
CO4	**3**	**1**	**-**	**1**	**-**	**-**	**2**
CO5	**3**	**1**	**-**	**1**	**-**	**-**	**2**
CO6	**3**	**1**	**-**	**-**	**1**	**-**	**2**
	3	**1**		**1**	**1**		**2**

SC-203 - APPLIED PHYSICS
Course Contents

1. **UNIT – 1 SIMPLE HARMONIC MOTION**

Duration: 12 periods

Periodic motion - Simple Harmonic Motion (SHM)– definition – examples, Conditions for SHM, Time period, frequency, amplitude and phase of a particle in SHM, Expressions for Displacement, Velocity, Acceleration, Time period and frequency of a particle executing SHM – derivations, Ideal simple pendulum – time period of simple pendulum –derivation – application of simple pendulum to determine the acceleration due to gravity experimentally, laws of simple pendulum, Second's pendulum- related numerical problems

2. **UNIT – 2 SOUND**

Duration: 13 periods

Wave motion – definition and characteristics, audible range – infrasonic and ultrasonic, longitudinal and transverse waves – examples, Relation among wavelength, frequency and velocity of a wave – derivation, Stationary waves, beats - applications of beats, echo – definition - applications - relation between time of echo and distance of obstacle, Doppler effect in sound (no derivation, formulae only) – list the applications – ultrasound and radar in medicine and engineering- –derivation- Reverberation and time of reverberation - Sabine's formula - Free and forced vibrations - Resonance - Conditions of good auditorium, noise pollution – causes, effects and methods to minimize noise pollution, related numerical problems.

3. **UNIT – 3 MAGNETISM AND ELECTRICITY**

Duration: 13 periods

Basics of magnetism, Coulomb's inverse square law in magnetism, moment of couple on a bar magnet placed in a uniform magnetic field – derivation, expression for magnetic induction field strength at a point on the axial line of a bar magnet –derivation, Kirchhoff's laws in electricity, Wheatstone bridge – balancing condition, application of Wheatstone bridge –Meter bridge, Concept of electromagnetic induction - self-induction and mutual induction, Faraday's Laws, Lenz's law, principle and working of transformer-types of transformers, types of magnetic materials – dia, para and ferromagnetic materials, related numerical problems.

4. **UNIT – 4 OPTICS**

Duration: 12 periods

Electromagnetic spectrum – various types of electromagnetic radiations (gamma rays, x-rays, uv, visible, infrared, microwave and radio waves)-wavelength range-applications (microwave oven, microwave communication, x-rays in medicine, uv lamps, infrared remote controllers), Light theories-dual nature, reflection, refraction, and interference, Photo

electric effect - Einstein's photo electric equation – Work function and threshold frequency - laws of photo electric effect - applications of photo electric effect – photo cell.

5. UNIT – 5 MODERN PHYSICS

Duration: 12 periods

LASER – definition, Spontaneous emission and Stimulated emission –principle and working of LASER, characteristics of LASER- types of LASER, applications of LASER, Total internal reflection, critical angle, conditions for total internal reflection, Principle and working of Optical fiber –types- Applications of optical fiber –Nanotechnology, nano particles and nano materials-applications and devices, Superconductivity-basic concept-applications of Superconductors.

6. UNIT -6 SEMICONDUCTOR PHYSICS

Duration: 13 periods

Energy bands in solids- valence band- conduction band – forbidden gap – Energy band diagram of conductors, insulators and semiconductors – concept of Fermi level - Intrinsic semiconductors - examples - Concept of holes in semiconductors - Doping - Extrinsic semiconductors - P-type and N-type semiconductors, PN Junction diode – Forward Biasing and Reverse Biasing - Volt-Ampere (V-I) characteristics - Applications of PN diode - Diode as rectifier (half wave rectifier), Light Emitting Diode – principle and working, solar cell – principle and working.

LEARNING OUTCOMES:

Upon completion of the course the student shall be able to

SIMPLE HARMONICMOTION

1.1 Define periodic motion and Simple Harmonic Motion (SHM).
1.2 List the examples of SHM.
1.3 List the conditions of Simple Harmonic Motion.
1.4 Define the terms time period, frequency, amplitude and phase of a particle in SHM.
1.5 Develop the expressions for Displacement, Velocity, Acceleration, Time period and Frequency of a particle executing in SHM.
1.6 Define Ideal simple pendulum and develop the expression for time period of simple pendulum.
1.7 Make use of simple pendulum to determine the acceleration due to gravity at a place.
1.8 Develop the laws of simple pendulum.
1.9 Define second's pendulum.
1.10 Solve related numerical problems

SOUND

2.1 Define wave and outline the characteristics of wave (frequency, wavelength, amplitude, and time period).
2.2 Explain audible range, infrasonic and ultrasonic waves.
2.3 Explain longitudinal and transverse wave motion with examples.
2.4 Develop the expression relating wave velocity, frequency and wavelength.
2.5 Explain stationary waves with neat diagram.
2.6 Explain the phenomenon of beats and list the applications of beats.
2.7 Explain echo and list the applications of echo.
2.8 Apply principle of echo to find the distance of an obstacle from the observer.
2.9 Explain Doppler Effect in sound (no derivation, formulae only-source and observer in relative motion-toward and away from each other).
2.10 List the applications of Doppler Effect.
2.11 Apply Doppler Effect as a tool in medicine (ultrasound) and engineering (radar).
2.12 Explain Reverberation, reverberation time and outline Sabine's formula.
2.13 Define free and forced vibrations and resonance with examples.
2.14 List the conditions of a good auditorium.
2.15 Explain noise pollution and list the causes, effects and methods to minimize noise pollution.
2.16 Solve related numerical problems.

MAGNETISM AND ELECTRICITY

3.1 Summarize magnetic field, magnetic lines of force and magnetic induction field strength.
3.2 Explain Coulomb's inverse square law of magnetism.
3.3 Develop an expression for moment of couple on a bar magnet placed in a uniform magnetic field.

3.4 Develop an expression for magnetic induction field strength at a point on the axial line of a bar magnet.
3.5 Explain Kirchhoff's laws in electricity.
3.6 Explain Wheatstone's bridge with legible sketch.
3.7 Apply Kirchhoff's laws to develop formula for balancing of Wheatstone's bridge.
3.8 Apply principle of Wheatstone's bridge to Meter Bridge.
3.9 Explain Faraday's laws of electromagnetic induction.
3.10 Explain self-induction and mutual induction.
3.11 Explain Lenz's law.
3.12 Explain the principle and working of Transformer.
3.13 Explain types of transformers (Step up and Step down).
3.14 Explain types of magnetic materials (dia, para and ferro magnetic materials).
3.15 Solve related numerical problems.

OPTICS

4.1 Explain various frequency/wavelength windows of electromagnetic spectrum (gamma rays, x-rays, uv, visible, infrared, microwave and radio waves).
4.2 Summarize the emission process of electromagnetic radiation.
4.3 Apply electromagnetic radiations to microwave oven, microwave communication, x-rays in medicine, uv lamps and infrared remote controllers.
4.4 Outline light theories (Newton's Corpuscular theory, Huygen's Wave theory, Maxwell's Electromagnetic wave theory and Planck's Quantum theory).
4.5 Explain reflection, refraction and interference.
4.6 Explain dual nature of light.
4.7 Explain Photo electric effect.
4.8 Explain Einstein's photo electric equation, work function and threshold frequency.
4.9 Summarize laws of photo electric effect.
4.10 List the applications of photo electric effect.
4.11 Explain the working of photocell.

MODERN PHYSICS

5.1 Define LASER.
5.2 Explain concept of energy levels (Ground state, excited state and Meta stable state).
5.3 Explain Spontaneous emission and Stimulated emission.
5.4 Explain principle and working of LASER.
5.5 List the characteristics of LASER.
5.6 List the types of LASER.
5.7 Utilize LASER in Engineering and Medicine (Bar code reading, Laser welding and cutting, Laser eye surgery).
5.8 Explain Total internal reflection.
5.9 Define Critical angle.
5.10 List the conditions of total internal reflection.
5.11 Explain the principle and working of Optical fiber.

5.12 Explain types of optical fiber (Step index and Graded index).
5.13 List the applications of optical fiber.
5.14 Define Nano scale and properties at nano scale.
5.15 Explain Nano particles and Nano materials (zero, one, two and three dimensional).
5.16 Outline Nano technology-based devices and application (Nano tubes, Ultra-high-definition displays, drug delivery, energy applications for clean environment)
5.17 Explain basic concept of Superconductivity.
5.18 List the applications of Superconductors.

SEMICONDUCTOR PHYSICS

6.1 Explain Valence band, Conduction band and Forbidden energy gap in solids.
6.2 Explain Conductors, Insulators and Semiconductors on the basis of energy band diagram.
6.3 Explain the concept of Fermi level.
6.4 Explain Intrinsic semiconductors.
6.5 List the examples of intrinsic semiconductors.
6.6 Explain the concept of hole and doping in semiconductors.
6.7 Explain Extrinsic semiconductors - P-type and N-type semiconductors.
6.8 Explain PN Junction Diode.
6.9 Explain Forward bias and Reverse bias of PN diode (biasing and flow of majority and minority carriers with diagram).
6.10 Summarize Volt-Ampere (V-I) characteristics of PN Diode.
6.11 List the applications of PN Diode.
6.12 Explain the principle of diode as a Rectifier – half wave rectifier.
6.13 Explain working principle of Light Emitting Diode (LED).
6.14 Explain the working principle of Solar cell.

References:

1. Principles of Physics by N. Subrahmanyam and Brijlal, S. Chand & Co, New Delhi, edition, 1982
2. Engineering. Physics by R.K. Gaur, S.L. Gupta, Dhanpatrai Publications, New Delhi.
3. ISC Physics, Book I&II, P. Vivekanandan, DK Banerjee, S Chand, New Delhi.
4. Intermediate Physics, Vol. I&II, Telugu Academy, TS, Hyderabad.
5. Fundamentals of Physics by Halliday and Resnick.

E-learning resources:

1. Hyper Physics website: http://hyperphysics.phy-astr.gsu.edu/

MID SEM-I EXAM

S.No	Unit Name	R	U	A	Remarks
1	Unit-I	1, 2	5(a) 5(b)	7(a) 7(b)	
2	Unit-II	3, 4	6(a) 6(b)	8(a) 8(b)	
Total Questions		4	4	4	

MID SEM –II EXAM

S.No	Unit Name	R	U	A	Remarks
1	Unit-III	1, 2	5(a) 5(b)	7(a) 7(b)	
2	Unit-IV	3, 4	6(a) 6(b)	8(a) 8(b)	
Total Questions		4	4	4	

Semester End Examination

Sl No	Unit No.	Questions to be set for SEE					Remarks
		R			U	A	
1	I	4	1		9(a)	13(a)	
2	II						
3	III		2		10(a)	14(a)	
4	IV						
5	V		3	5, 6	9(b) 11(a) 11(b)	13(b) 15(a) 15(b)	
6	VI			7,8	10(b) 12(a) 12(b)	14(b) 16(a) 16(b)	
Total Questions		8			8	8	

Legend:	Remembering (R)	1 Mark
	Understanding (U)	3 Marks
	Application (A)	5 Marks

BOARD DIPLOMA EXAMINATION, (C-21)
MID SEM-I
SECOND SEMESTER EXAMINATION
SC- 203 - APPLIED PHYSICS

Time: 1 Hour Total Marks: 20

PART-A 4 X 1 = 4

Instructions: 1. Answer **ALL** questions.
2. Each question carries **ONE** mark.

1. Define Simple harmonic motion.
2. Define Ideal simple pendulum.
3. Define wave.
4. Define resonance.

PART-B 2 X 3= 6

Instructions: 1. Answer **ALL** questions.
2. Each question carries **THREE** marks.

5 (a) Explain the conditions for SHM.

(OR)

5 (b) Explain the laws of simple pendulum

6 (a) Explain longitudinal and transverse wave motion with examples.

(OR)

6 (b) List three applications of beats

PART-C 2 X 5=10

Instructions: 1. Answer **ALL** questions.
2. Each question carries **FIVE** marks.

7 (a) Develop the expressions for velocity and acceleration of a particle executing SHM

(OR)

7 (b) Develop the expression for time period of a simple pendulum

8 (a) Explain echo and apply principle of echo to find the distance of an obstacle from the observer.

(OR)

8 (b) List five causes of noise pollution.

** ** **

BOARD DIPLOMA EXAMINATION, (C-21)
MID SEM-II
SECOND SEMESTER EXAMINATION
SC-203 - APPLIED PHYSICS

Time: 1 Hour Total marks: 20

PART-A 4 X 1 = 4

Instructions: 1. Answer **ALL** questions.
2. Each question carries **ONE** mark.

1. Define magnetic field
2. Define magnetic lines of force.
3. What is refraction?
4. Define work function in photoelectric effect.

PART-B 2 X 3= 6

Instructions: 1. Answer **ALL** questions.
2. Each question carries **THREE** marks.

5(a) Explain Faradays laws of electromagnetic induction.

(OR)

5(b) Explain Lenz's law.

6(a) Summarize the laws of photo electric effect

(OR)

6(b) Summarize the emission process of electromagnetic radiation.

PART-C 2 X 5=10

Instructions: 1. Answer **ALL** questions.

2. Each question carries **FIVE** marks.

7(a) Develop an expression for balancing condition of Wheatstone bridge with legible sketch.

(OR)

7(b) Explain the principle of working of transformer.

8(a) Outline light theories.

(OR)

8(b) Explain the working of photocell.

** ** **

BOARD DIPLOMA EXAMINATION, (C-21)
FIRST SEMESTER EXAMINATION
SC-203 - APPLIED PHYSICS

Time: 2 Hours Total marks :40

PART-A 8 X 1 = 8

Instructions: 1. Answer **ALL** questions.
2.Each question carries **ONE** mark

1. Define ultrasonic sound.
2. Define magnetic field.
3. Define critical angle.
4. Define Simple Harmonic Motion.
5. Define Nano scale.
6. Define superconductivity.
7. What is forbidden gap?
8. What is doping in semiconductors?

PART-B 4 X 3 = 12

Instructions: 1. Answer **ALL** questions.
2. Each question carries **THREE** marks.

9(a)Develop the laws of simple pendulum.

(OR)

9(b)Explain concept of meta stable state.

10(a) Explain Coulomb's inverse square law of magnetism.

(OR)

10(b)Explain the concept of Fermi level.

11(a)List the characteristics of LASER.

(OR)

11(b)List the applications of superconductors.

12(a)Explain P-type and N-type semiconductors.

(OR)

12(b) List the applications of PN Diode.

PART-C 4 X 5 = 20

Instructions: 1. Answer **ALL** questions.
2. Each question carries **FIVE** marks.

13(a) Explain echo and apply principle of echo to find the distance of an obstacle from the observer.

(OR)

13(b) Explain working principle of LASER.

14(a)Derive the expression for magnetic induction field strength at a point on the axial line of a bar magnet.

(OR)

14(b)Explain forward and reverse bias of PN diode

15(a) Explain the principle and working of optical fiber.

. (OR)

15(b)Explain Nano particles and zero, one, two- and three-dimensional Nano materials.

16(a)Explain the principle of diode as a rectifier.

(OR)

16(b)Explain working principle of Light Emitting Diode (LED).

SC-204 - Engineering Chemistry and Environmental Studies

Course Title	Engineering Chemistry and Environmental Studies	Course Code	SC-204
Semester	II	Course Group	Foundation
Teaching Scheme in Periods (L:T:P)	4:1:0	Credits	3
Methodology	Lecture +Tutorial	Total Contact Periods	75
CIE	60 Marks	SEE	40 Marks

Prerequisite:
Basic knowledge of Chemistry in Secondary Education.

Course Objectives: After studying this course the student will be able to understand and appreciate the role of chemistry and environmental studies in different spheres of industries.

Course Outcome:
On successful completion of the course, the students will have ability to attain below Course Outcomes (CO):

CO1	Understand and explain the different metallurgical processes and apply the knowledge to solve engineering problems.
CO2	Understand and explain the various corrosion processes, protection methods and apply the knowledge to reduce the corrosion in new equipment and constructions.
CO3	Understand and explain the different methods of preparation, moulding and industrial uses of organic polymers and apply the knowledge to select suitable polymer for domestic and industrial use.
CO4	Understand the concept of calorific value, gaseous fuels, explosives and lubricants and apply the knowledge to use the relevant fuel and lubricant for domestic and industrial applications.
CO5	Understand and explain construction and applications of Galvanic Cell, Batteries and Cells and apply the knowledge to identify and compare the materials best suited for construction of Battery and Fuel Cells.
CO6	Explain the causes, effects and controlling methods of air pollution, water pollution and soil pollution and apply relevant methods to solve domestic and industrial problems.

CO -PO Matrix:

CO	PO1	PO2	PO3	PO4	PO5	PO6	PO7
CO1	3	-	-	-	-	-	2
CO2	3	-	-	-	1	-	2
CO3	3	-	-	-	-	-	2
CO4	3	1	-	-	1	-	2
CO5	3	1	-	-	1	-	2
CO6	3	-	-	-	3	-	3

ENGINEERING CHEMISTRY AND ENVIRONMENTAL STUDIES
COURSE CONTENTS

UNIT - I: MTALLURGY:

12 Periods

Characteristics of metals - Distinguish between metals and non metals - Mineral, Ore, Gangue, Flux, Slag - Concentration of ore - Construction and operation of Reverboratory furnace and Blast furnace - Methods of extraction of crude metal - Roasting, Calcination, Smelting – Alloys-Purpose of making alloys – Composition and uses of Brass, German Silver, Nichrome, Stainless Steel and Duralumin.

UNIT – II: CORROSION:

12 Periods

Corrosion - Factors influencing the rate of corrosion – Dry and wet theories of corrosion – Composition cell, Stress cell and Concentration cell - Rusting of iron and its mechanism - Prevention of corrosion – Protective coatings, - Cathodic protection - Paints – Constituents of paint – Functions of constituents of paint.

UNIT – III: POLYMERS:

13 Periods

Polymers - Polymerization - Types of polymerization – Addition polymerization, Condensation polymerization - Plastics - Types of plastics - Advantages of plastics over traditional materials - Disadvantages of using plastics - Preparation and uses of the following plastics: 1. Polythene 2. PVC 3.Teflon 4. Polystyrene 5.Urea formaldehyde 6. Bakelite - Compounding and moulding of plastics – Natural rubber – Vulcanization of natural rubber - Elastomers – Preparation and uses of Butyl rubber, Buna-s, Neoprene rubber - Fibre -Preparation and uses of Nylon 6,6, and Polyester (Polyethylene terephthalate) - Biodegradable polymers and their general applications.

UNIT – IV: FUELS AND LUBRICANTS:

12 Periods

Definition and classification of fuels- Characteristics of good fuel - Calorific value - HCV and LCV - Calculation of oxygen required for combustion of methane and ethane – Preparation method, composition, calorific value, and uses of gaseous fuels- a) CNG b) LPG c) Water gas, d) Producer gas, e) Coal gas, and f) Bio gas – Explosives – Classification of explosives – Applications of explosives – Lubricants – Classification and functions of lubricants.

UNIT – V: ELECTROCHEMICAL CELL – BATTERIES:

13 Periods

Galvanic cell – Standard electrode potential – Reference electrodes – Types of reference electrodes - Electro chemical series - EMF of cell – Batteries -Types of batteries - Fuel cells.

UNIT – VI: ENVIRONMENTAL STUDIES:

13 Periods

Introduction- Classification of air pollutants based on origin and states of matter-Air pollution – Causes, effects, and controlling methods of air pollution - Water pollution – Causes, effects, and controlling methods of water pollution – Soil pollution – Causes of soil pollution – General effects of soil pollution - Controlling methods of soil pollution – Carbon Trading.

Reference Books:

1. Engineering chemistry – Jain & Jain – DhanpatRai Publishing Company.
2. A Text book of Engineering Chemistry – S.S.Dara – S.Chand Publications.
3. Environmental Studies – A.K.De.
4. Environmental Studies, R. Rajagopalan, 2nd Edition, 2011, Oxford University Press
5. Intermediate Chemistry I and II – Telugu Academy TS
6. Engineering chemistry – Prasanta Rath, B. Ramadevi, Ch. Venkataramana Reddy& Subhendu Chakroborty – CENGAGE

E learning links:

https://iupac.org/
https://www.khanacademy.org/
www.nptel.ac.in
Specific Learning Outcomes
Upon completion of the course, the student will have ability to

UNIT – I: METALLURGY

1.1 List the characteristics of metals.

1.2 Distinguish between metals and non metals

1.3 Define and explain the terms 1. Mineral, 2. Ore, 3. Gangue, 4. Flux and 5. Slag

1.4 List the minerals and ores of iron, aluminium and copper.

1.5 Apply the Hand picking, Levigation, Froth floatation and Electromagnetic methods for the concentration of ore.

1.6 Explain the construction and operation of Reverboratory furnace and Blast furnace

1.7 Explain the following methods involved in extraction of crude metal- Roasting, Calcination, Smelting.

1.8 Define an alloy

1.9 Explain the purpose of making of alloys

1.10 Write the composition of the following alloys: i) Brass, ii) German silver, iii) Nichrome iv) Stainless Steel, v) Duralumin

1.11 List the uses of following alloys: i) Brass, ii) German Silver, iii) Nichrome, iv) Stainless Steel, v) Duralumin.

UNIT – II: CORROSION

2.1 Define the term corrosion

2.2 Explain the factors influencing the rate of corrosion based on i) Nature of metal ii) Nature of environment of metal.

2.3 Explain the dry and wet theories of corrosion.

2.4 Describe the formation of a) Composition cell, b) Stress cell c) Concentration cell

2.5 Define rust and explain the mechanism of rusting of iron with chemical reactions.

2.6 Explain the following methods of prevention of corrosion:

a) Proper designing
b) Modification of environment.
c) Protective coatings i) Metallic coatings (Anodic coating and Cathodic coating) ii) Inorganic coatings iii) Organic coatings
d) Cathodic protection -Sacrificial anode method and Impressed voltage method.

2.7 Define the term paint.

2.8 Write the characteristics of good paint.

2.9 List the constituents of paint (pigment, vehicle or drying oil, thinner, drier, filler and plasticizers) and state the functions of constituents of paint.

UNIT – III: POLYMERS

3.1 Define polymerization

3.2 State and explain the types of polymerization (Addition polymerization and Condensation polymerization) with examples.

3.3 Define the term plastic

3.4 List the characteristics of plastics.

3.5 State and explain the advantages of plastics over traditional materials

3.6 State the disadvantages of using plastics.

3.7 Explain the types of plastics with examples.

3.8 Distinguish between thermoplastics and thermosetting plastics

3.9 Explain the methods of preparation and uses of the following plastics:

1. Polythene, 2. Polyvinyl chloride, 3.Teflon, 4.Polystyrene 5.Urea formaldehyde
6. Bakelite (Only flow chart for Bakelite i.e. without chemical equations).

3.10 Explain the concept of compounding of plastic.

3.11 List the types of additives (Fillers, Binders, Plastisizers, Stabilizers and Colouring materials with examples) used in compounding of plastic and their impact on properties of plastic.(Elementary level only)

3.12 Explain the types of moulding of plastics (Compression moulding, Injection moulding and Extrusion moulding)

3.13 Define the term natural rubber

3.14 Explain processing of natural rubber from latex.

3.15 Write the structural formula of natural rubber

3.16 List the characteristics of natural rubber

3.17 Explain the process of vulcanization

3.18 List the characteristics of vulcanized rubber

3.19 Define the term elastomer

3.20 Describe the preparation and uses of the following synthetic rubbers a) Butyl rubber, b) Buna-s and c) Neoprene rubber.

3.21 Define fibre.

3.22 Explain the preparation and uses of fibres–Nylon 6,6 and Polyethylene terephthalate (PET)

3.23 Define biodegradable polymers and state their general applications

UNIT – IV: FUELS AND LUBRICANTS

4.1 Define the term fuel.

4.2 Classify the fuels based on physical state - solid, liquid and gaseous fuels with examples.

4.3 Classify the fuels based on occurrence- primary and secondary fuels with examples.

4.4 List the characteristics of a good fuel

4.5 Explain the advantages of gaseous fuels

4.6 Define Calorific value - HCV and LCV.

4.7 Explain the terms i) Knocking ii) Octane number and iii) Cetane number

4.8 Calculate the oxygen required for the combustion of methane and ethane.

4.9 State the method of preparation (Without description), composition, calorific value and uses of the following gaseous fuels:

a) CNG b) LPG c) Water gas, d) Producer gas,

e) Coal gas, and f) Bio gas

4.10 Define and understand the term explosive.

4.11 Classify the explosives (Primary explosives (Detonators), Low explosives (Propellants) and High explosives with examples).

4.12 State the constructive and destructive applications of explosives.

4.13 Define the term lubricant.

4.14 Classify the lubricants.

4.15 Explain the functions of lubricants.

UNIT – V: Electrochemical cell – Batteries

5.1 Define galvanic cell

5.2 Explain the construction and working of galvanic cell

5.3 Distinguish between electrolytic cell and galvanic cell

5.4 Explain standard electrode potential

5.5 Understand the need of reference electrode and types of reference electrodes.

5.6 Explain primary reference electrode (standard hydrogen electrode) and Secondary reference electrode (Calomel electrode).

5.7 Define electrochemical series and explain its significance.

5.8 Define and explain EMF of a cell.

5.9 Solve the numerical problems on EMF of cell

5.10 Define battery and explain the types of batteries with examples

5.11 Explain the construction, working and applications of Dry cell (Leclanche cell), Lead storage battery, Ni-Cd cell

5.12 Explain the construction, working and advantages of Hydrogen - Oxygen fuel cell

UNIT – VI: ENVIRONMENTAL STUDIES

6.1 Define air pollution

6.2 Classify the air pollutants- based on origin and states of matter

6.3 Explain the causes of air pollution

6.4 Explain the effects of air pollution on human beings, plants and animals

6.5 Explain the Green house effect - Ozone layer depletion and Acid rain

6.6 Explain the controlling methods of air pollution

6.7 Define water pollution

6.8 Explain the causes of water pollution

6.9 Explain the effects of water pollution on living and non living things

6.10 Explain the methods of control of water pollution.

6.11 Explain the process of sewage treatment.

i) Primary treatment (Coagulation)

ii) Secondary treatment (Trickling filters and Activated sludge process)

iii) Tertiary treatment (Brief note on tertiary treatment)

6.12 Define soil pollution.

6.13 State and explain the causes of soil pollution.

6.14 List the general effects of soil pollution.

6.15 Explain the controlling methods of soil pollution.

6.16 Understand the concept of Carbon Credits and Carbon Trading (Elementary level only)

6.17 Understand the advantages and disadvantages of Carbon Trading

Blue Print

MID SEM-I EXAM

S.No	Unit Name	R	U	A	Remarks
1	Unit-I	1, 2	5(a) 5(b)	7(a) 7(b)	
2	Unit-II	3, 4	6(a) 6(b)	8(a) 8(b)	
Total Questions		4	4	4	

MID SEM –II EXAM

S.No	Unit Name	R	U	A	Remarks
1	Unit-III	1, 2	5(a) 5(b)	7(a) 7(b)	
2	Unit-IV	3, 4	6(a) 6(b)	8(a) 8(b)	
Total Questions		4	4	4	

Semester End Examination

Sl No	Unit No.	Questions to be set for SEE					Remarks
		R			U	A	
1	I	4	1		9(a)	13(a)	
2	II						
3	III		2		10(a)	14(a)	
4	IV						
5	V		3	5, 6	9(b) 11(a) 11(b)	13(b) 15(a) 15(b)	
6	VI			7,8	10(b) 12(a) 12(b)	14(b) 16(a) 16(b)	
Total Questions		8			8	8	

Legend:	Remembering (R)	1 Mark
	Understanding (U)	3 Marks
	Application (A)	5 Marks

BOARD OF DIPLOMA EXAMINATIONS (C21)
MID SEM EXAMINATION – I
SC-204 - ENGINEERING CHEMISTRY AND ENVIRONMENTAL STUDIES

Time: 1 Hour **Max. Marks: 20**

PART – A

Instructions: Answer **all** questions. Each question carries **one** mark 4 X 1 = 4 marks

1. Define the terms mineral and ore.
2. Define an alloy.
3. Define corrosion.
4. What is paint?

PART – B

Instructions: Answer the **following** questions. Each question carries **three** marks 2 x 3 =6 Marks

5. a. List any six characteristics of metals.

   (OR)

   b. Explain the process of roasting of ore with an example.
6. a. List any six factors influencing the rate of corrosion.

   (OR)

   b. Explain the formation of stress cell with an example.

PART – C

Instructions: Answer the **following** questions. Each question carries **five** marks 2 x 5 =10 Marks

7. a. Explain the froth floatation process of concentration of ore .

   (OR)

   b. Explain the construction and operation of Reverboratory furnace
8. a. Explain the mechanism of rusting of iron with chemical equations.

   (OR)

   b. Explain sacrificial anode method of prevention of corrosion with a neat diagram.

BOARD OF DIPLOMA EXAMINATIONS (C21)
MID SEM EXAMINATION – II
SC-204 - ENGINEERING CHEMISTRY AND ENVIRONMENTAL STUDIES

Time: 1 Hour **Max. Marks: 20**

PART – A

Instructions: Answer **all** questions. Each question carries **one** mark. 4 X 1 = 4 marks

1. What is the chemical name of natural rubber?
2. Define polymerization.
3. What are fuels?
4. Mention any two characteristics of good fuel.

PART – B

Instructions: Answer the **following** questions. Each question carries **three** marks

2 x 3 =6 Marks

5. a. Write any three advantages of plastics over traditional materials.

   (OR)

   b. Write any three differences between thermoplastic and thermosetting plastic.
6. a. Define calorific value and differentiate lower and higher calorific values.

   (OR)

   b. Classify the fuels based on their physical state.

PART – C

Instructions: Answer the **following** questions. Each question carries **five** marks

2 x 5 =10 Marks

7. a. What is vulcanization of rubber and explain with chemical equations.

   (OR)

   b. Explain Compression Moulding, and Injection Moulding of plastics
8. a. Write the composition and uses of water gas and producer gas.

   (OR)

   b. Calculate the mass and volume of the oxygen required for the complete combustion of 8 grams of CH_4.

BOARD OF DIPLOMA EXAMINATIONS (C21)
END SEMESTER EXAMINATION
SC-204 - ENGINEERING CHEMISTRY AND ENVIRONMENTAL STUDIES

Time: 2 Hours **Max. Marks: 40**

PART – A

Instructions: Answer **all** questions. Each question carries **one** mark. 8 X 1 = 8 marks

1. Define gangue.
2. What are the different types of plastics?
3. Define Galvanic cell.
4. What is the chemical formula of rust?
5. What is electrochemical series?
6. What are the different types of batteries?
7. Define air pollution.
8. Define water pollution.

PART – B

Instructions: Answer the **following** questions. Each question carries **three** marks

4 x 3 =12 Marks

9. a. Write any three differences between metals and non-metals.

(OR)

b. Write any three significances of electrochemical series.

10. a. Write a method of preparation and two uses of polystyrene.

(OR)

b. Classify the pollutants based on origin and give examples.

11. a. Write any three differences between electrolytic cell and galvanic cell.

(OR)

b. Write the electrode reaction of lead storage battery during discharging.

12. a. Write a short note on Green house effect.

(OR)

b. Write a note on Ozone layer depletion.

PART – C

Instructions: Answer the **following** questions. Each question carries **five** marks

4 x 5 =20 Marks

13. a. Explain the formation of composition cell and stress cell.

(OR)

b. Describe the construction and working principle of Leclanche cell.

14. a. Calculate the mass and volume of oxygen required for the complete combustion of 15 gm of ethane(C_2H_6).

(OR)

b. Explain the controlling methods of water pollution.

15. a. Explain the construction and functioning of Galvanic cell.

(OR)

b. Explain working principle of H_2-O_2 fuel cell.

16. a. Explain the control methods of air pollution.

(OR)

b. What is Carbon Trading? Explain the advantages of Carbon Trading

CS – 205 - PROGRAMMING IN C

Course Title	Programming in C	Course Code	CS-205
Semester	II	Course Group	Core
Teaching Scheme in Periods (L:T:P)	4:1:0	Credits	3
Methodology	Lecture +Tutorial	Total Contact Periods	75
CIE	60 Marks	SEE	40 Marks

Prerequisites

Knowledge of basic mathematics and IT skills.

Course Outcome

Upon completion of the course the students shall be able to:

Course Outcome	
CO1	Write Algorithms and draw flow charts for given problems
CO2	Use data types and classify operators
CO3	Develop programs using Decision making and looping statements
CO4	Create arrays and know usage of strings
CO5	Develop programs using different types of functions
CO6	Develop programs using Structures and Files

COURSE CONTENTS:

1. Programming Methodology and Introduction to C Language

Duration: 10 Periods

Steps involved in problem solving - Define Algorithm - Characteristics of algorithm - Steps involved in algorithm development - Algorithms for simple problems - Define flowchart - Symbols used in flowchart - Flowcharts for simple problems - Differentiate algorithm and flowchart - Define Program - Differentiate between algorithm and program - Define High level language and low level language- Define Compiler, Assembler, Linker and Loader - Define source code, assembly code, object code, machine code - importance of C language –- structure of C program – different stages in converting the C program source code into an executable code - steps in executing the C program.

2. Understand Constants, Variables and Data Types in C and Understand Operators and Expressions in C

Duration: 10 Periods

Character set - C Tokens - Keywords and Identifiers- Constants and Variables - data types and classification - declaration of a variable - Assigning values to variables - Define operator -Classify operators - List and explain various arithmetic operators with examples -Illustrate the concept of relational operators - List logical operators - various assignment operators - Increment and decrement operators - List bitwise operators - Conditional operator - List various special operators - precedence and associatively of operators - Define expression - Evaluation of Arithmetic expressions - Evaluation of Logical expressions - Evaluation of Relational expressions - type conversion techniques – Know Preprocessor directives – Know Header Files - Reading and writing characters - formatted input and output.

3. Decision making and Looping statements

Duration: 14 Periods

Decision making in C programming - simple if statement – *if-else* statement – nested if statement - *else-if* ladder – break and continue statements - Switch statement - Classification of various loop statements- while loop – *do-while* loop - for loop - nesting of loops- Comparisons of different loop statements - Infinite loop and steps to avoid it.

4. Arrays and Strings

Duration: 14 Periods

Arrays – definition, declaration and initialization of One Dimensional -Array -Accessing the elements in the Array - 'accessing array out of bounds' problem - Reordering an array in ascending order – average of elements in an array – largest element in an array - Declaration and initialization of two Dimensional Arrays - sample programs on matrix addition and matrix multiplication, transpose- Strings – Definition, Declaration and initialization of String variables - Reading of strings from terminal - writing strings to screen - String handling functions with sample programs

5. User defined functions

Duration: 13 Periods

Function – Definition - Need for user defined functions - Advantages of functions - elements of function - Return values and their types - function prototype - function call - function definition – Scope, visibility and lifetime of variables in functions- Local and External variables -Global variable-Functions with no arguments and no return values - functions with arguments with no return values - functions with arguments with return values - functions with no arguments with return values - Recursion - sample programs on recursion - passing arrays to functions .

6. Structures and Unions and File Management

Duration: 14 Periods

Structures and Unions Structure- Definition - Creating a structure - Declaring structure variables - Accessing the structure members - Concept of structure assignment - Find size of a structure - Nested structure - Structure as function arguments - Array of structures - Structure containing arrays - array of structures containing arrays - Union and illustrate usage of a union – difference between Structures and Union.

Files management File – Definition - Declare file pointer to a file - file opening modes - Concept of closing of a file - Input / Output operations on a file - Random access to files.

REFERENCE BOOKS

1. Let Us C -- Yeshwanth Kanetkar BPB Publications
2. Programming in ANSI C -- E. Balaguruswamy Tata McGrawHill
3. Programming with C -- Gottfried Schaum'outline
4. C The complete Reference -- Schildt Tata McGraw Hill

Specific Learning Outcomes:

Upon completion of the course the student shall be able to

1.0 Programming Methodology and Introduction to C Language

1.1. State different steps involved in problem solving

1.2. Define algorithm and know its characteristics

1.3. State the steps involved in algorithm development

1.4. Develop algorithms for simple problems.

1.5. Define flowchart and know symbols used in drawing flowcharts

1.6. Draw flowchart for simple problems.

1.7. Differentiate algorithm and flowchart

1.8. Define program and differentiate between program and algorithm

1.9. Define High level language and low level language

1.10. Define Compiler, Assembler, Linker and Loader

1.11. Define source code, assembly code, object code, machine code.

1.12. state the importance of C language

1.13. Explain the structure of C program

1.14. List and Explain different stages in converting the C program source code to executable code.

1.15. Explain the steps involved in executing the C program

2.0 Constants, Variables , Data Types in C and Operators and Expressions and Input , Output functions in C

2.1 Describe character set, C Tokens-Keywords, Variables, Identifiers, Constants and Variables.

2.2 Define Data type. Classify data types and explain with examples

2.3 Explain declaration of a variable and assigning values to variables

2.4 Define operator.

2.5 Classify and Explain operators with examples

2.6 Describe precedence and associativity of operators

2.7 Define expression

2.8 Describe evaluation of Arithmetic, Relational and logical expressions

2.9 Illustrate type conversion techniques.

2.10 Define and List Pre-processor directives

2.11 Discuss #include and #define Pre-processor directives.

2.12 Define Header file and discuss stdio.h, conio.h, math.h, string.h Header files.

2.13 Illustrate getchar(),putchar(),scanf(),printf() with programs.

3.0 Decision making , Looping statements

3.1 Discuss decision making in programming and

3.2 Explain decision making statements- if , if-else, nested if, else-if ladder - with syntax and programs

3.3 Discuss break and continue statements.

3.4 Explain decision making statement- switch statement - with syntax and programs

3.5 Define looping and list loop statements

3.6 Explain the loop statements – while, do- while, for statement- with syntax and programs

3.7 Define nesting of loops and implement it

3.8 Compare different loop statements

3.9 Know about Infinite loop and steps to avoid it

4.0 Arrays and Strings

4.1 Define Array. Describe declaration and initialization of One Dimensional Array with syntax and program

4.2 Explain about ‘accessing array out of bounds’ problem

4.3 Explain reading elements of an array, accessing the elements and display them with program

4.4 Explain sorting elements in an array in ascending order

4.5 Explain finding the average of elements in an array and finding the largest element in an array

4.6 Explain declaration and initialization of two Dimensional Arrays

4.7 Illustrate the concept of two dimensional arrays with sample programs on matrix addition, subtraction, matrix multiplication and transpose of a matrix

4.8 Define String and know about declaration and initialization of a String variable.

4.9 Know about reading & writing of strings with programs

4.10 Explain about various String handling functions with sample programs.

5.0 User defined functions and Applications

5.1 Define function, state the need for user defined functions, advantages of functions

5.2 Know the elements of function and return values.

5.3 Define and discuss function prototype, function call, and function definition with syntax and program.

5.4 Discuss the scope, visibility and lifetime of variables in functions

5.5 Differentiate Local and Global variables

5.6 Illustrate functions with no arguments and no return values with programs

5.7 Illustrate functions with no arguments and with return values with programs

5.8 Illustrate functions with arguments and with no return values with programs

5.9 Illustrate functions with arguments and with return values with programs

5.10 Illustrate passing arrays to functions with programs

5.11 Define recursion and Illustrate recursion with programs

6.0 **Structures and Unions and File Management**

Structures and Unions

6.1 Define structure
6.2 Illustrate creating a structure tag and declaring structure variables,
6.3 Explain accessing structure members and structure assignment
6.4 Know size of a structure.
6.5 Discuss nested structure concept.
6.6 Illustrate array of structures, structures containing arrays, arrays of structures containing arrays.
6.7 Illustrate structure as function arguments and returning of structure variables as function values.
6.8 Define Union and illustrate usage of a union.
6.9 Know the differences between Structure and Union

Files management

6.10 Define file
6.11 Know how to declare file pointer to a file
6.12 Illustrate the concept of file opening in various modes
6.13 Illustrate the concept of closing of a file
6.14 Illustrate the concept of Input / Output operations on a file
6.15 Illustrate the concept of random access to files

Suggested Student Activities:

Student activity like mini-project, surveys, quizzes, etc. should be done in group of 5-10students.

1. Each group should do any one of the following type of activity or any other similar activity related to the course with prior approval from the course coordinator and programme coordinator concerned.
2. Each group should conduct different activity and no repetition should occur.
3. Explore and analyse topics to improve the level of creativity and analytical skill by taking Quiz/ tests/ assignments. Documents have to be maintained as a record.
4. Create a power point presentation on the topic relevant to course or advanced topic as an extension to the course to improve the communication skills. Documents have to be maintained as a record.
5. Visit different sites relevant to topics. Listen to the lectures and submit a handwritten report
6. Coding competitions

Suggested E-learning links:

1. http://www.tutorialspoint.com/cprogramming/
2. http://www.indiabix.com/online-test/c-programming-test/
3. https://www.w3schools.in/c-tutorial/
4. https://nptel.ac.in/courses/106/104/106104128/
5. https://onlinecourses.nptel.ac.in/noc19_cs42/preview

CO-PO Mapping Matrix:

Course Outcome		CL	Linked PO	Teaching Hours
CO1	Write Algorithms and draw flow charts for given problems	**R, U, A**	**1,2,3,4,7**	**10**
CO2	Use data types and classify operators	**R, U, A**	**1,2,3,4,7**	**10**
CO3	Develop programs using Decision making and looping statements	**U, A**	**1,2,3,4,7**	**14**
CO4	Create arrays and know usage of strings	**U, A**	**1,2,3,4,7**	**14**
CO5	Develop programs using different types of functions	**U, A**	**1,2,3,4,7**	**13**
CO6	Develop programs using Structures and Files	**R, U, A**	**1,2,3,4,7**	**14**
		Total Sessions		**75**

MID SEM – I Exam

S.No	Unit Name	R	U	A	Remarks
1	Unit-I	1, 2	5(a) 5(b)	7(a) 7(b)	
2	Unit-II	3, 4	6(a) 6(b)	8(a) 8(b)	
Total Questions		4	4	4	

MID SEM – II Exam

S.No	Unit Name	R	U	A	Remarks
1	Unit-I	1, 2	5(a) 5(b)	7(a) 7(b)	
2	Unit-II	3, 4	6(a) 6(b)	8(a) 8(b)	
Total Questions		4	4	4	

Semester End Examination

S.No	Unit Name	R			U	A	Remarks
1	Unit-I	4	1		9(a)	13(a)	
2	Unit-II						
3	Unit-III		2		10(a)	14(a)	
4	Unit-IV						
5	Unit-V		3	5,6	9(b) 11(a) 11(b)	13(b) 15(a) 15(b)	
6	Unit-VI			7,8	10(b) 11(a) 11(b)	14(b) 16(a) 16(b)	
Total Questions		8			8	8	

Legend:	Remembering (R)	1 Mark
	Understanding (U)	3 Marks
	Application (A)	5 Marks

MODEL QUESTION PAPER
BOARD DIPLOMA MID-SEM-1 EXAMINATION (C-21)
CS-205– PROGRAMMING IN C

TIME: 1 HOUR **MAXIMUM MARKS: 20**

PART-A ***MARKS: 4 X1=4***

NOTE: 1. Answer all questions.
2. Each question carries one mark.

1. List any two differences between algorithm and flowchart.
2. Define Low level language
3. List various types of constants.
4. Define an expression.

PART-B ***MARKS: 2 X 3=6***

NOTE: 1. Answer any one question from 5 and 6.
2. Each question carries three marks.

5.a)Write any three differences between algorithm and flowchart
(OR)
b)Write any three differences between high level language and low level language
6.a)How to declare variable in C ? Give examples.
(OR)
b)Evaluate an expression (2+5)*(10-4)%10.

PART-C ***MARKS: 2 X 5=10***

NOTE: 1. Answer any one question from 7 and 8.
2. Each question carries five marks.

7. a)Draw a flowchart to find factorial of given number N.
(OR)
b) Draw a flowchart to find biggest of three numbers.
8. a)Explain different data types in C with examples.
(OR)
b)Explain operators in C with examples.

MODEL QUESTION PAPER
BOARD DIPLOMA MID-SEM-2 EXAMINATION (C-21)
CS-205– PROGRAMMING IN C

TIME: 1 HOUR **MAXIMUM MARKS: 20**

PART-A ***MARKS: 4 X1=4***

NOTE: 1. Answer all questions.
2. Each question carries one mark.

1. Give the syntax of if statement in C.
2. Give the syntax of while statement in C.
3. Define an array.
4. Give the syntax for declaring and initializing of one dimensional array.

PART-B ***MARKS: 2 X3=6***

NOTE: 1. Answer any one question from 5 and 6.
2. Each question carries three marks.

5. a)Write any three differences between break and continue statements.

(OR)

5. b) Write any three differences between while and do-while statements.
6. a)Write a C program to find largest number in array.

(OR)

6. b)Explain any three String handling functions .

PART-C ***MARKS: 2 X 5=10***

NOTE: **1. Answer any one question from 7 and 8.**
2. Each question carries five marks.

7. a) Explain do-while statement with syntax and sample program

(OR)

7. b) Explain switch statement with syntax and sample program .
8. a)Write a C program to find the multiplication of two matrices.

(OR)

8. b) Write a C program to find the addition of two matrices.

MODEL QUESTION PAPER
BOARD DIPLOMA END SEMESTER EXAMINATION (C-21)
CS-205– PROGRAMMING IN C

TIME: 2 HOURS **MAXIMUM MARKS: 40**

PART-A ***MARKS:* 8 X 1=8**

NOTE: 1. Answer all questions.
2. Each question carries one mark.

1. List any two differences between algorithm and flowchart..
2. Give the syntax of if statement in C.
3. List any two advantages of functions.
4. Give the syntax for declaring and initializing of one dimensional array.
5. Define function.
6. Define recursion.
7. What is a structure?
8. What is a file?

PART-B

NOTE: 1. Answer any one question from 9, 10, 11 and 12. ***MARKS: 4 X 3=12***
2. Each question carries three marks.

9. a) Write any three differences between algorithm and flowchart.

(OR)

9. b)Write a C program to find factorial of a number using recursion.

10. a) Write any three differences between break and continue statements.

(OR)

10. b) Write any three differences between structure and union statements.

11. a) Explain elements of function in C.

(OR)

11. b) Write any three differences between local variable and global variable statements.

12. a)Explain various modes to open a file.

(OR)

12. b) Explain how to access structure members.

PART-C

NOTE: 1. Answer any one question from 13, 14, 15 and 16 MARKS: 4 X 5=20

2. Each question carries five marks.

13. a) Draw a flowchart to find biggest of three numbers.

(OR)

13. b)Write a C program to illustrate functions without arguments and without return values.

14. a) Write a C program to find the multiplication of two matrices.

(OR)

14. b) Explain random handling functions.

15. a) Write a C program to illustrate functions with arguments and without return values.

(OR)

15. b) Write a C program to illustrate functions with arguments and with return values.

16. a) Write a C program to implement nested structures.

(OR)

16. b) Write a C program to implement array of structures.

ME-206 ADVANCED ENGINEERING DRAWING

(This Course is Common to all programs of Diploma in Level offered by the State Board of Technical Education, Hyderabad, Telangana State)

Course Title	Advanced Engineering Drawing	Course Code	ME-206
Semester	II	Course Group	Core
Teaching Scheme in Periods (L:T:P)	1:0:2	Credits	1.5
Methodology	Teaching + Practice	Total Contact Periods:	45
CIE	60 Marks	SEE	40 Marks

Pre-requisites: Knowledge of Basic Engineering Drawing pictorial intelligence to learn this course.

COURSE OUTCOMES (CO)

Upon successful completion of the course, the students will be able to

Course Outcome		**CL**	**Linked Program Objectives (PO)**
CO1	Apply the principles of Projection of solids also draw the projections of solids.	**R / U / A**	**1, 2, 3, 4, 7**
CO2	Appreciate the need of Sectional views also draw the sectional views and true sections of the engineering components.	**R / U / A**	**1, 2, 3, 4, 7**
CO3	Escalate the need of auxiliary views and draw the auxiliary views of the given engineering components.	**R / U / A**	**1, 2, 3, 4, 7**
CO4	Gain the knowledge of Isometric views of engineering components also draw the isometric views of given components.	**R / U / A**	**1, 2, 3, 4, 7**
CO5	Grasp the knowledge and draw the development of surfaces of different engineering components	**R / U / A**	**1, 2, 3, 4, 6,7**
CO6	Appraise the drawing principles and appreciate its applications in engineering field.	**R / U / A**	**1, 2, 3, 4, 7**

BLUEPRINT OF MARKS FOR SEE

Unit No	Name of the Unit	Periods	Questions to be set for SEE		
			R	U	A
			PART-A (2M Questions)		PART-B (6 M Questions)
1	Projection of Solids	08	Q1		Q9(a)
2	Sectional Views	08	Q2		Q9(b)
3	Auxiliary views	06	Q3		Q10(a)
4	Pictorial drawing	09	Q4		Q10(b)
5	Development of surfaces	14	Q5, Q6, Q7, Q8		Q11(a), Q11(b), Q12(a), Q12(b)
Total Periods / Total Questions		**45**	**8**		**4**

[R: Remembering, U: Understanding – 2 Marks] [A: Application – 6 Marks]

Note: Question Paper consists PART – A and PART-B, Total Marks: 40, Time: 2 Hours

PART – A consists of 8 and student have to answer ALL questions, each question carries 2 marks (8x2 = 16)

PART – B consists of 4 questions and student have to answer ALL questions, each question carries 6 marks (4x6=24)

CIE Question Paper Pattern and Syllabus

Unit No	Unit Name	Questions to be set for CIE		
		R	U	A
		2M Questions		6M Questions
Mid Semester - I				
1	Projection Solids	Q1, Q2		Q5(a), Q5(b),
2	Sectional Views	Q3, Q4		Q6(a), Q6(b)
	Total	4		2
Mid Semester - II				
3	Auxiliary views	Q1, Q2		Q5(a), Q5(b),
4	Pictorial drawing	Q3, Q4		Q6(a), Q6(b)
	Total	4		2
[R: Remembering, U: Understanding – 2 Marks] [A: Applying – 6 Marks]				
CIE Question Paper Pattern: Total Marks : 20, Time: 1 Hour Maximum Marks: 20, Time: 1 Hour Part A: Consists of 4 Short questions, students have to attempt ALL questions and each question carries 2 Marks.(4 x 2 = 8 Marks) Part B: Consists of 2 Essay type questions, students have to attempt ALL questions and each questior carries 6 Marks.(2 x 6 = 12 Marks)				

COURSE CONTENT

1.0 Projection of solids

(08 periods)

Projection of regular solids

a) Axis perpendicular to one of the planes
b) Axis parallel to VP and inclined to HP and vice versa.

2.0 Sectional views

(08 periods)

Need for drawing sectional views – what is a sectional view - Location of cutting plane – Purpose of cutting plane line – Selection of cutting plane to give maximum information (vertical and offset planes) - Hatching – Section of regular solids inclined to one plane and parallel to other plane

3.0 Auxiliary views (06 periods)

Need for drawing auxiliary views -Explanation of the basic principles of drawing an

auxiliary views - explanation of reference plane and auxiliary plane -Partial auxiliary view.

4.0 Pictorial Drawings

(09 periods)

Brief description of different types of pictorial drawing viz., Isometric, oblique, and perspective and their use - Isometric drawings: Iso axis, angle between them, meaning of visual distortion in dimensions - Need for an isometric scale, difference between Isometric scale and ordinary scale difference between Isometric view and Isometric projection - Isometric and non-Isometric lines -Isometric drawing of common features like rectangles, circular shapes, non-isometric lines - Use of box and offset methods.

5.0 Development of Surfaces

(14 periods)

Need for preparing development of surface with reference to sheet metal work - Concept of true length of a line with reference to its orthographic projection when the line is (i) parallel to the plane of projection (ii) inclined to one principal and parallel to the other -Development of simple solids like cubes, prisms, cylinders, cones, pyramid (sketches only) -Types of development: Parallel line and radial line development -Procedure of drawing development, drawings of trays, funnels, elbow pipes and rectangular ducts.

REFERENCE BOOKS

1. Engineering Drawing by Kapil dev – (Asian Publisher)
2. Engineering Drawing by Basant Agarwal&C.M Agarwal - (McGraw-hill)
3. Engineering Drawing by N.D.Bhatt. (Charotar Publishing House Pvt. Ltd.)
4. A Textbook on Engineering Drawing by P. Kannaiah, K. L. Narayana, K. Venkata Reddy

ONLINE RESOURCES

1. https://nptel.ac.in/courses
2. www.slideshare.net/shameem.mist/engineering-drawing
3. https://www.powershow.com/viewfl/76303a OWI5M/Engineering_Drawing_powerpoint_ppt_presentation
4. https://www.powershow.com/view0/91a2bf N2Q2N/Basic_engineering_drawing_solved_question_powerpoint_ppt_presentation

SPECIFIC LEARNING OUTCOMES

1.0 Apply Principles of Projection of solids

1.1. Draw the projections of solids to axis of solids parallel to one plane.

1.2. Draw the projections of solids to axis of solid inclined to other plane.

2.0 Appreciate the need of Sectional Views

2.1 Explain the need to draw sectional views.

2.2 Select the section plane for a given component to reveal maximum information.

2.3 Explain the positions of section plane with reference planes

2.4 Differentiate between true shape and apparent shape of section

2.5 Draw sectional views and true sections of regular solids discussed in 6.0

2.6 Apply principles of hatching.

3.0 Understand the need of auxiliary views

3.1 State the need of Auxiliary views for a given engineering drawing.

3.2 Draw the auxiliary views of a given engineering component

3.3 Differentiate between auxiliary view and apparent view

4.0 Prepare pictorial drawings

4.1 State the need of pictorial drawings.

4.2 Differentiate between isometric scale and true scale.

4.3 Prepare Isometric views for the given orthographic drawings.

5.0 Interpret Development of surfaces of different solids

5.1 State the need for preparing development drawing.

5.2 Prepare development of simple engineering objects (cubes, prisms, cylinders, cones, pyramid) using parallel line and radial line method.

5.3 Prepare development of surface of engineering components like trays, funnel, 90^0 elbow & rectangular duct.

COURSE-PO ATTAINMENT MATRIX

CO	PO1	PO2	PO3	PO4	PO5	PO6	PO7
CO1	3	2	1	3	-	-	3
CO2	3	2	1	2	-	-	3
CO3	3	1	1	2	-	-	2
CO4	3	1	2	3	-	-	2
CO5	3	2	2	3	-	1	1
CO6	3	1	3	3	-	-	3

ME-206

BOARD DIPLOMA EXAMINATION, (C-21)
DME – II SEMESTER
MID SEM - I EXAMINATION
ADVANCED ENGINEERING DRAWING

Time: 1 Hours] **[Total Marks: 20**

PART-A

4x2=8

Instructions : 1. Answer **ALL** questions.
2. Each question carries **TWO** marks.

1. Draw the projections of a triangular prism of base side 35 mm, resting on H.P. on its base such that one of its base side is perpendicular to V.P.
2. Draw the projections of a cone of base diameter 40 mm and height 60 mm resting on H.P. on its base.
3. A cube of base side 30 mm resting on its base on H.P. such that one of its base side is making an angle of 30^0 to V.P. A sectional plane parallel to H.P passes through the axis at a distance of 20 mm from the base. Draw the sectional top view of the truncated cube.
4. Draw the sectional top view of the square pyramid of base side 30 mm and height 60 mm is resting on HP on its base with one of its base side is parallel to V.P. when it is cut by a horizontal section plane at a distance of 30 mm from the apex.

PART-B 2x6=12

Instructions : 1. Answer any **ALL** questions.
2. Each question carries **SIX** marks.

5. (a) .Draw the projections of a pentagonal pyramid, base 30 mm edge and axis 50 mm long, having its base on the H.P. and an edge of the base parallel to the V.P. Also draw its side view.

(Or)

5. (b). A tetrahedron of 50 mm long edges is resting on the H.P. on one of its faces, with an edge of that face parallel to the V.P. Draw its projections.

6. (a) A cube of 35 mm long edges is resting on the H.P. on one of its faces with a vertical face inclined at 30° to the V.P. It is cut by a section plane parallel to the V.P. and 9 mm away from the axis and further away from the V.P. Draw its sectional front view and the top view.

(Or)

6. b) A cylinder of 40 mm diameter, 60 mm height and having its axis vertical, is cut by a section plane, perpendicular to the V.P., inclined at 45° to the H.P. and intersecting the axis 32 mm above the base. Draw its front view, sectional top view and true shape.

ME-206

BOARD DIPLOMA EXAMINATION, (C-21)
DME – II SEMESTER
MID SEM- II EXAMINATION
ADVANCED ENGINEERING DRAWING

Time: 1 Hours] [Total Marks: 20

PART-A

4x2=8

Instructions : 1. Answer **ALL** questions.
2. Each question carries **TWO** marks.

1. What is the need for an auxiliary view?
2. A cube of side 30 mm placed on HP and sectioned diagonally, draw the auxiliary view of the inclined surface.
3. Draw the isometric view of a block whose orthographic projections are given below assume proper dimensions.

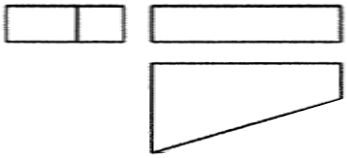

4. Draw the isometric view of a hexagonal plane of base side 30 mm when one of its side is parallel to H.P, when it is horizontal.

PART-B

2x6=12

Instructions : 1. Answer any **ALL** questions.
2. Each question carries **SIX** marks.

5. (a) Draw the auxiliary view of a component given below.

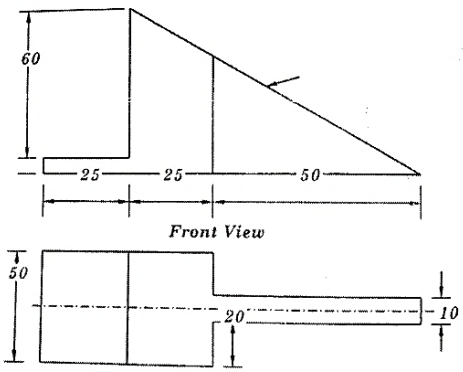

(Or)

5. (b) Draw the auxiliary view of the slopping surface of the cast iron block as shown in the figure.

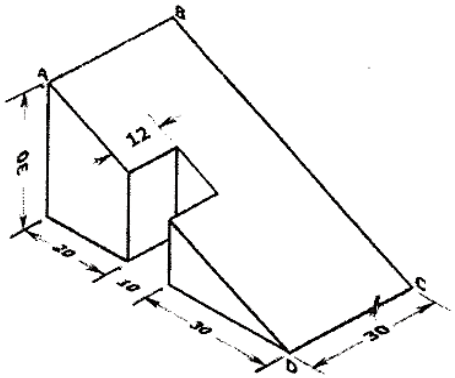

6. (a) Draw the isometric view of the block whose orthographic projections are given below by assuming proper dimensions.

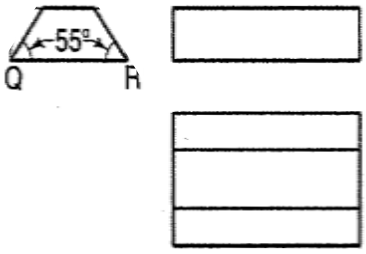

(Or)

6. (b) Draw the isometric drawing of the frustum of a cone shown in figure with proper dimensions.

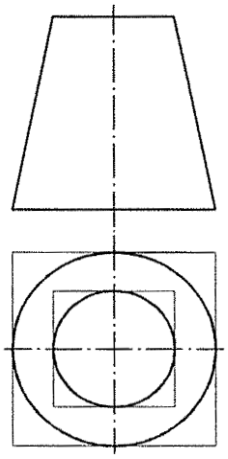

ME-206

BOARD DIPLOMA EXAMINATION, (C–21)
DME-II SEMESTER END EXAMINATION
ADVANCED ENGINEERING DRAWING

Time: 2hours] [Total Marks:40

Important Note: Wherever any question has choice, marks will be allotted only to first attempted question. **No marks will be allotted for extra questions answered.**

PART-A

8x2=16

Instructions :
1. Answer **ALL** questions.
2. Each question carries **TWO** marks.
3. All the dimensions are in mm.

1. Draw the projections of the cone with 30 mm height and 10 mm base circle radius, resting on H.P. on its base.
2. A cylinder with base radius 20 mm and height 60 mm resting on the ground, a 30^0 inclined section plane perpendicular to V.P. cuts the cylinder axis at mid point. Draw the sectional top view of the cylinder.
3. Draw the auxiliary view of sloping surface of the object whose isometric view is given below.

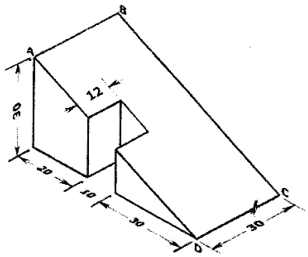

4. Draw the isometric view of a block whose orthographic views are given below by assume proper dimensions.

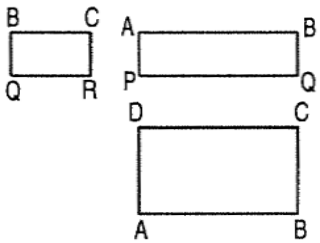

5. Develop the lateral surface of a cube of side length 30 mm.
6. Develop the lateral surface of a triangular pyramid of base side 25 mm and height 50 mm.
7. Develop the lateral surface of a cylinder of base diameter 60 mm.
8. Develop the lateral surface of a hexagonal prism of base side 25 mm and 60 mm height.

PART-B

4x6=24

Instructions :

1. Answer any **ALL** questions.
2. Each question carries **SIX** marks.
3. All the dimensions are in mm.

9. a) Draw the projection of a cone of base diameter 50 mm and height 80 mm when its axis is making an angle of 45^0 to H.P and parallel to the V.P.

(Or)

9. b) A triangular prism, base 30 mm side and axis 50 mm long, is lying on the H.P. on one of its rectangular faces with its axis inclined at 30° to the V.P. It is cut by a horizontal section plane, at a distance of 12 mm above the ground. Draw its front view and sectional top view.

10. a) Draw the auxiliary view of sloping surface of an object shown in figure.

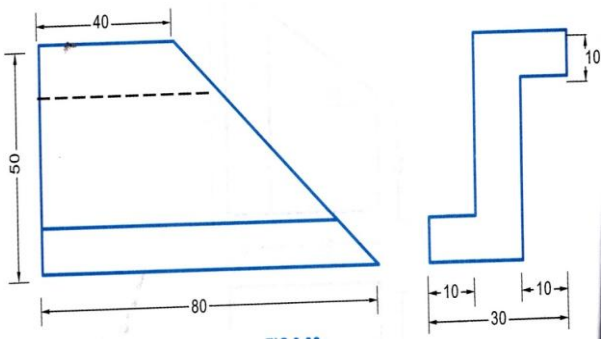

(Or)

10. b) Draw the isometric view of the block, whose orthographic views are shown in figure.

e shown.

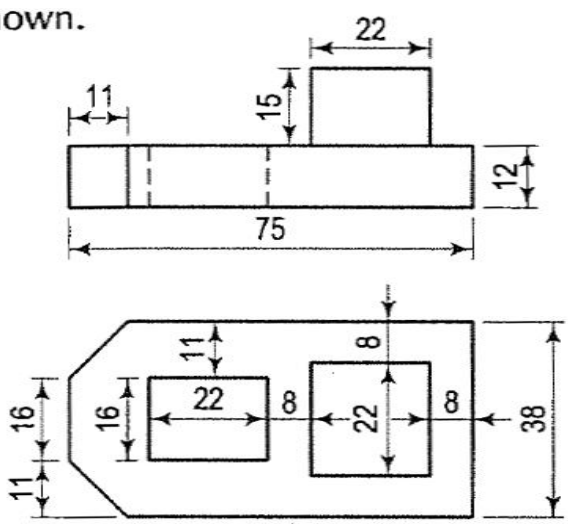

11. a) Develop the lateral surface of the truncated pentagonal prism as shown in figure.

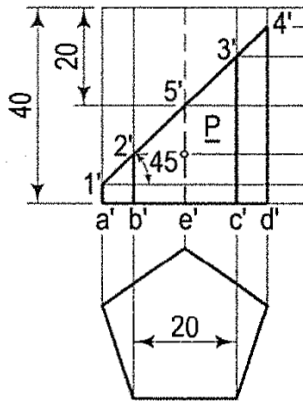

(Or)

11. b) Draw the development of a truncated cube shown in below figure.

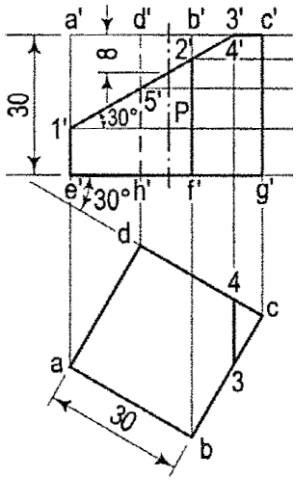

12. a) Develop of bottom portion of the truncated cylinder.

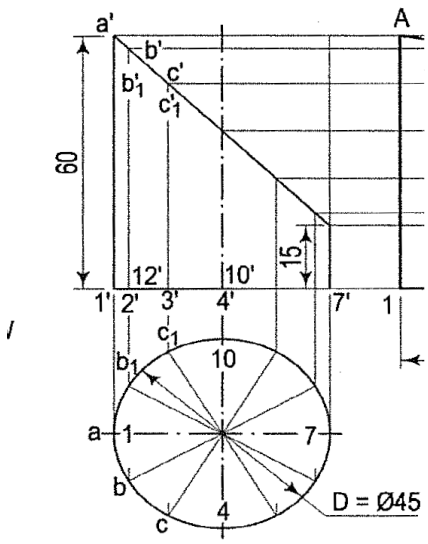

(Or)

12. b) Develop the portion 'P' in the below figure.

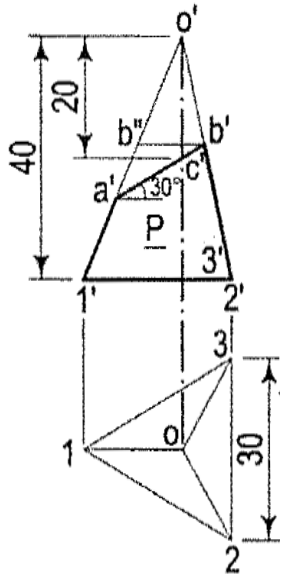

ME-207 ADVANCED AUTOCAD LAB

Course Title :	Advanced AutoCAD Lab	Course Code	ME-207
Semester	II	Course Group	Core
Teaching Scheme in Periods(L:T:P)	1:0:2	Credits	1.5
Methodology	Lectures+ Practice	Total Contact Periods :	45
CIE	60 Marks	SEE	40 Marks

Pre requisites This course requires the Basic CAD Skills and concepts of engineering drawing

COURSE OUTCOMES

CO1	Significance of Layers. Create and assign properties to layers and modify layers
CO2	Importance and advantages of blocks. Use of standard blocks and user defined blocks
CO3	Need of solid modeling and various methods of solid modeling with different surfaces
CO4	Create 3D drawings
CO5	Practice 3D object modifying skills
CO6	Practice rendering and selection of material

COURSE CONTENTS

UNIT -1 **Duration: 15 periods (T:5 + P:10pds)**

1.0 Layers

1.1 Organize the information on layers

Setting a current layer, layers color, line type, line weight, print style locking and unlocking of layers, the layer visibility and layer printing. Setting of current line type. The loading of additional line types, creating and naming of line type, editing of line type.

1.2 Use the Blocks, Attributes and External references to manage the drawing blocks

The purpose of a block, creating a block, inserting a block, redefining a block, exploding a block

1.3 Attribute

Editing attribute definitions, attaching attribute to blocks. Editing attributes attached to blocks, Extracting attributes information.

UNIT -2 **Duration: 15 periods (T:5 + P:10)**

2.0 Viewing entities in three dimensions

2.1 Creation of three-dimensional entities using different methods

Drawing of two dimensional entities in three dimensional space.

Converting two dimensional planar entities into three dimensional entities by applying elevation and thickness.

Converting two dimensional planar entities into three dimensional entities by revolving or extruding.

Creation of three-dimensional faces, rectangular meshes, ruled surface meshes, extruded surface meshes, revolved surface meshes, three dimensional entities such as boxes, Cylinders, Cones, Spheres, wedges, torus, Regions, extruded solids, revolved solids, composite solids, intersect solids

Boolean operations like union, subtract and interfere.

2.2 Editing in three dimensions

Rotating in three dimensions, Array in three dimensions (Rectangular and polar).

Mirroring in three dimensions, aligning in three dimensions.

2.3 Editing of three dimensional solids

Sectioning and Slicing of solids, hiding, shading and rendering.

2.4 Selection of material from library

Enable the material library, editing materials and material library.

UNIT- 3

3.0 Application of above units **Duration: 15 periods (T:5 + 10P)**

RECOMMENDED BOOKS

1. Auto cad by George Omura
2. 4MCAD User Guide- IntelliCAD Technology Consortium

SPECIFIC LEARNING OUTCOMES:

UNIT -1

1.0 Organize the information on layers

1.1 Explain the need and importance of Layers.

1.2 Practice creating new layer, naming the layer and assigning properties like Layer colour, Line type and line weight and setting the current layer

1.3 Practice the locking and unlocking of layers

1.4 Practice the Freezing and thawing of layers

1.5 Practice the layer visibility and layer printing

1.6 Practice the loading of additional line types

Use the Blocks, Attributes and External references to manage the Drawing

1.7 Define a block
1.8 Explain the purpose of a block
1.9 Practice the creating a block
1.10 Practice the inserting a block
1.11 Practice the redefining a block
1.12 Practice the exploding a block
1.13 Define an Attribute
1.14 Practice the editing attribute definitions
1.15 Practice the attaching attribute to blocks
1.16 Edit attributes attached to blocks
1.17 Extract attributes information
1.18 Define external reference
1.19 Practice the Attaching, Removing, and Reloading of external references
1.20 Practice the Binding, Clipping and changing the path of external references

UNIT -2

2.0 Understand the concepts of 3D

2.1 View entities in three dimensions
2.2 To set a new viewing direction
2.3 To dynamically set a view direction

Create three-dimensional entities using different methods

2.4 Draw two dimensional entities in three dimensional space.
2.5 Convert two dimensional planar entities into three dimensional entities by applying elevation and thickness.
2.6 Convert two dimensional planar entities into three dimensional entities by revolving or extruding.
2.7 Create three-dimensional faces.
2.8 Create rectangular meshes.
2.9 Create ruled surface meshes.
2.10 Create extruded surface meshes.
2.11 Create revolved surface meshes.
2.12 Create three dimensional entities such as boxes, Cylinders, Cones, Spheres, wedges, torus, Regions.
2.13 Create extruded solids.
2.14 Create revolved solids.
2.15 Create composite solids.
2.16 Create intersect solids.

Editing in three dimensions

2.17 Rotate in three dimensions
2.18 Array in three dimensions (Rectangular and polar)
2.19 Mirror in three dimensions
2.20 Align in three dimensions

Edit three dimensional solids

2.21 Practice Sectioning and Slicing solids

2.22 Practice hiding, shading and rendering

UNIT -3

3.0 Practice applications on above unit

Exercise	Key components
Layers	• Importance of layers • Creation of new layers and controlling properties of layers
Working with blocks	• Create, insert and explode a block • Attach attribute to blocks • Edit and extract attributes attached to blocks
View entities in three dimensions	• Set a new viewing direction • Set dynamically view direction
Create three-dimensional entities	• Create three-dimensional faces • Create rectangular meshes, ruled surface meshes, extruded surface meshes, revolved surface meshes • Create three dimensional entities such as boxes, Cylinders.
Edit in three dimensions	• Rotate in three dimensions • Array in three dimensions (Rectangular and polar) • Mirror in three dimensions • Align in three dimensions
Edit three dimensional solids	• Practice Sectioning and Slicing solids • Practice hiding, shading and rendering
Practice the selection of material from library	• Enable material library • Edit materials and material library

Course Outcome		Cognizant Level	Linked PO	Teaching Hours
CO1	Significance of Layers. Create and assign properties to layers and modify layers	U/A	1,2,3,4,7	6
CO2	Importance and advantages of blocks. Use of standard blocks and user defined blocks	U/A	1,2,3,4,6,7	9
CO3	Need of solid modeling and various methods of solid modeling with different surfaces	U/A	1,2,3,4,7	3
CO4	Create 3D drawings	U/A	1,3,4,,67	6
CO5	Practice 3D object modifying skills	U/A	1,3,4,6,7	6
CO6	Practice rendering and selection of material	A	1,2,3,4,6,7	15

CO-PO MATRIX

CO	PO1	PO2	PO3	PO4	PO5	PO6	PO7
CO1	3	2	2	3	-	-	3
CO2	3	1	2	2	-	1	3
CO3	3	2	2	3	-	-	2
CO4	3	-	2	3	-	1	2
CO5	3	-	2	3	-	1	2
CO6	3	2	3	3	-	2	2

MID SEM-I EXAM

S N	Unit name	R,U (Q No's)	A (Q No's)	Remarks
1	Unit-1	1,2,3,4	5,6	

MID SEM-2 EXAM

S N	Unit name	R,U (Q No's)	A (Q No's)	Remarks
1	Unit-2	1,2,3,4	5,6	

SEE

S N	Unit name	Questions to be set for SEE		Remarks
		R,U (Q No's)	A (Q No's)	
1	Unit-1	1,2		
2	Unit-2	3,4		
3	Unit-3		5,6	

ME-207- Advanced AutoCAD Lab
MODEL PAPER FOR MID -I (CIE)

TIME: 2hr **Marks: 20M**

PART-A

NOTE: Answer all questions 4 X 2 = 8marks

1. Create four layers, name the layers and assign different properties like line color, line type, line weight to different layers.
2. Write the procedure to create a block.
3. What is meant by attribute.
4. What do you mean by layer and what are the advantages of it.

PART-B

NOTE: Answer any one questions 1 X 2 = 12marks

5. Draw the following using Layers. Use different layers to different line types, text, dimension and main figure.

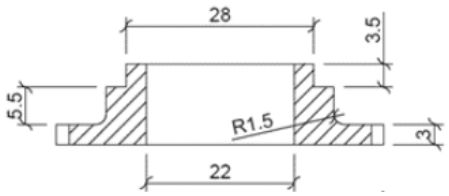

6. Draw the following using Layers. Use different layers to different line types, text, dimension and main figure.

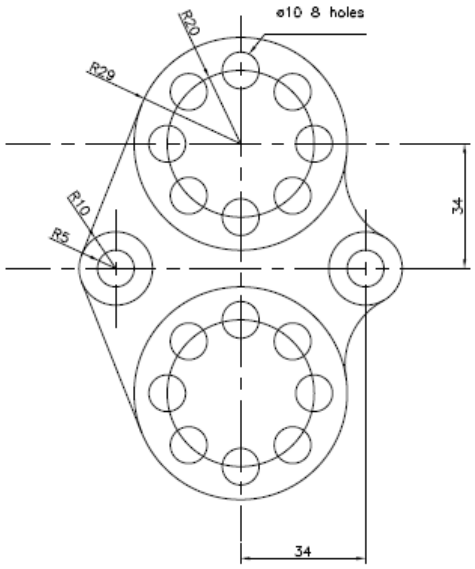

ME-207- Advanced AutoCAD Lab
MODEL PAPER FOR MID -II (CIE)

TIME: 2hr **Marks: 20M**

PART-A

NOTE: Answer all questions 4 X 2 = 8marks

1. Draw rectangle of 100x60 and extrude to a depth of 25mm.
2. Draw a cylinder of dia 50mm and height 100mm.
3. List various Boolean operations
4. Draw a cube of 100mm side and make a hole of 25mm.

PART-B

NOTE: Answer any one questions 1 X 2 = 12marks

5. Draw the following 3D figure using any CAD software as per the given dimension.

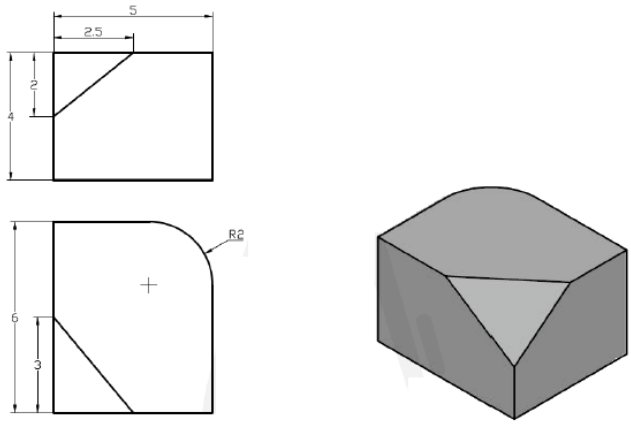

6. Draw the following using any CAD software and add dimensioning.

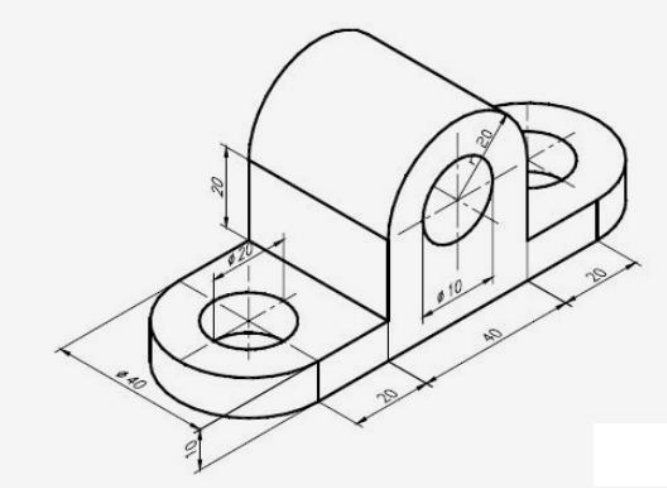

ME-207- Advanced AutoCAD Lab
MODEL PAPER FOR SEE

TIME: 3hr **Marks: 40M**

PART-A

NOTE: Answer all questions 4 X 4 = 16marks.

1. Write the procedure to create and insert a block.
2. Create four layers, name the layers and assign different properties like line color, line type, line weight to different layers.
3. Draw a 3D cone of base 30mm and height 50mm
4. Draw to 2 boxes of 50x30x20 and 30x50x20 mm and union them

.

PART-B

NOTE: Answer any one questions 1 X 24 = 24marks

5. (a) Draw the following 3D object CAD software. 20+4 marks
   (b) List the commands in sequence and also write the procedure

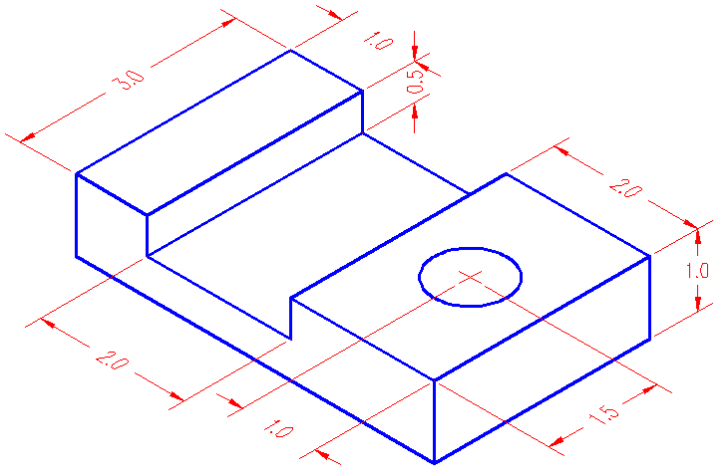

6. (a) Draw the following 3D object CAD software. 20+4 marks
   (b) List the commands in sequence and also write the procedure

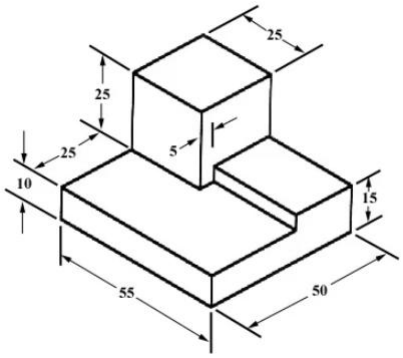

EC-208 - SEMICONDUCTOR DEVICES LAB

Course Title	Semiconductor Devices Lab	Course Code	EC-208
Semester	II	Course Group	Core
Teaching Scheme in Periods(L:T:P)	1:0:2	Credits	1.5
Methodology	Lecture + Practice	Total Contact Periods :	45
CIE	60 Marks	SEE	40 Marks

Pre requisites

This course requires the basic skills of handling Basic Electronics tools and Components, knowledge of connecting cables and meters

Course Contents

Sl No	Unit Name	Exercises	Periods
1	Familiarization of Semiconductors Lab	A,B	6
2	Semiconductor Diodes and Rectifiers	1,2,3,4,5,6,7,8	24
3	Transistors & Field Effect transistors	9,10,11,12	12
4	Mini project	Beyond curriculum	3
TOTAL			45

List of Laboratory Exercises

Unit I.- Familiarization of Semiconductors Lab

1.1 Collect Data sheets relevant to Semiconductor's lab Practice

1.2 Identify different Semiconductor Devices by their symbols and device numbers

Unit II- Semiconductor Diodes and Rectifiers

2.1 Draw the forward & reverse characteristics of Silicon diode

i. a) Determine Knee voltage, b) Identify Cut-off, and Linear regions

2.2 Test the diode with DMM & Analogue multimeter and identify the Terminals

a.) Connect a 6V lamp in series with diode and observe the behaviour a) under forward and reverse biased conditions. b) On low voltage AC supply

b.) Observe the effect of temperature on diode reverse current by heating the diode with a soldering Iron

2.3 Draw the forward & reverse characteristics of Zener diode and determine Breakdown Voltage

i. Test the Zener diode with DMM & Analogue multimeter and identify the Terminals

2.4 Produce different reference voltages by using a 12V Zener diode and voltage divider network.

a) Produce higher reference voltage by connecting two Zener diodes in series

2.5 Implement Rectifier circuits using Diodes and observe the effect of Filtering

a) Implement Half wave rectifier with and without filter
b) Implement Full wave rectifier with and without filter

2.6 Implement Bridge rectifier with and without filter

a) Implement Voltage Doubler circuit
b) Connect a diode IN4007 in series with a 60W 230V Lamp and test it. (Record your observations)

2.7 Build a Regulated power supply and draw the regulation characteristics

a) using Zener diode ii) using 3 Terminal +ve Regulator
b) i) implement a negative 3 Terminal Regulator ii) Implement a Dual regulated power supply using both +ve and –ve 3 terminal regulators

2.8 Build an adjustable +ve Regulated power supply using LM 317 and Test

Unit III:-Transistors & Field Effect transistors

2.9 Draw Input and output characteristics of NPN Transistor and determine Beta of the transistor

a) Plot Input & Output characteristics for CE configuration
b) Test the Transistor with DMM & Analogue multimeter and identify the Terminals and Type of transistor and find the β

2.10 Use Transistor as a Switch

a) Turn on and turn off a relay using Transistor (BC148 as a switch.)
b) Connect a 6v lamp in series with BD139 and observe the effect of base current variation on lamp brightness.

2.11 Draw the input and output characteristics of JFET and determine pinch off voltage and transconductance.

a) Test the JFET (BFW10) with DMM &Analogue multimeter and identify the Terminals.

2.12 Use JFET (BFW10) as a current source/Current Limiter

a) Implement a constant current source with a FET by applying appropriate gate bias

b) Practically Verify High input impedance characteristic of the gate circuit.

Unit-IV Mini/Micro Project (beyond curriculum)

4.1 Assemble a simple circuit (electronic Kit) and test it.

Suggested Student Activities

i. Collection of catalogues and specification sheets, preparation of a chart displaying symbols of passive components and connectors/cables.

ii. Collection of the contributors (scientists) and contribution details to the field of Electrical and Electronics engineering

iii. Any other such activities that can contribute to the student's knowledge in respect of this course.

iv. Record the best practices used in the disposal of E-waste and precautions in the operation of electrical appliances.

Course Outcome		**Linked PO**	**Teaching Periods**
CO1	Appreciate the significance of Semiconductor Devices in Circuit Building Blocks	1,2,3,4,5,6,7,8	12
CO2	Identify Different Diodes,Transistors and Use them to Design Power Supplies for Desired Ratings	1,2,3,4	12
CO3	Apply the Combination of Diodes and Transistors for Amplifier Applications	1,2,3	15
CO4	Design simple circuit using Electronic Semiconductor Devices	1,2,3,10	6

E Learning Resources

1. http://electrical4u.com/
2. www.electronics-tutorials.ws
3. www.nptel.ac.in

SC-209 - Applied Science Lab

Course Title	Applied Science Lab	Course Code	SC-209
Semester	II	Course Group	Practical
Teaching Scheme in Pds/Hrs(L:T:P)	1:0:2	Credits	1.5
Type of course	Tutorial & Practical	Total Contact Periods	45
CIE	60 Marks	SEE	40 Marks

Physics Lab

Pre requisites: Knowledge of basic concepts of basic High school science and basic mathematics

Course objectives: To provide practical knowledge about the basics of Physics instrumentation and calculations/measurements.

Course outcomes:

Course Outcomes	
CO 1	Understand the properties of convex lens and find the focal length and focal power of convex lens (Separate & Combination)
CO 2	Determine the value of acceleration due to gravity using simple pendulum and verify with L-T^2graph.
CO 3	Determine the velocity of sound in air at room temperature and calculate velocity of sound at 0^0 C.
CO 4	Determine the refractive index of a solid using travelling microscope.
CO 5	Practice the mapping of magnetic lines of force-locating neutral points and calculate magnetic moment.

CO	**PO1**	**PO2**	**PO3**	**PO4**	**PO5**	**PO6**	**PO7**
CO 1	**3**			**-**	**-**	**1**	**1**
CO 2	**3**			**-**	**-**	**1**	**1**
CO 3	**3**			**-**	**-**	**1**	**1**
CO 4	**3**			**-**	**-**	**1**	**1**
CO 5	**3**			**-**	**-**	**1**	**1**
	3					**1**	**1**

Learning outcomes

On successful completion of the course, the student will have ability to:

1. Find the focal length and focal power of convex lens (Separate & Combination)
2. Determine the value of acceleration due to gravity and verify with L-T^2graph.
3. Determine the velocity of sound in air at room temperature and calculate velocity of sound in air at 0^0 C .
4. Determine refractive index of a solid.
5. Practice the mapping of magnetic lines of force-location of neutral points and calculate magnetic moment.

Course Delivery:

The course will be delivered through lectures, class room interaction, group discussions, graded exercises, demonstration and practice.

Tutorial: 1 Period/Experiment:

1. Introduction to Physics practical and its importance, safety precautions in maintenance of equipment in the laboratory.
2. Maintenance of apparatus and equipment.
3. Follow of Do's and Don'ts.
4. Maintenance of data in manual and record book.
5. Write the procedure of the experiment before the commencement of each experiment.
6. Strictly following of instructions given from time to time by the lecturer-in-charge.
7. Demonstration of each experiment by the lecturer in charge.

Conduction of experiments: 2 periods/Experiment.

Student must perform experiment individually under the supervision of the lecturer-in charge.

EXAMINATION & EXPERIMENTS		
S.NO	**EXAMINATION**	**EXPERIMENTS**
1	MIDSEM-I	EXPERIMENT NO 1 & 2
2	MIDSEM-II	EXPERIMENT NO 3 & 4
3	SEMESTER END EXAMINATION	EXPERIMENT NO 1,2,3,4 and 5

Scheme of Valuation of SEE		
S.No	**Particulars**	**Marks**
1.	Objective/Aim	01
2.	Apparatus/Equipment	02
3.	Observations	02
4.	Principle including formula	02
5.	Experiment (Tabular form, readings, etc)	05
6.	Calculation and Result	05
7.	Viva Voce	03
	Total	**20**

References:

1. Basic Applied Physics – R.K. Gaur
2. Laboratory manual for class XI and XII - NCERT

Chemistry Lab

Prerequisite:
Knowledge of basic concepts of Chemistry of Secondary Education.

Course Objectives:
To provide practical knowledge about the basics of volumetric analysis of chemical compounds.

Course Outcomes:

On successful completion of the course, the student will have ability to attain the following COs

Course Outcome	
CO1	Estimate the amount of the mohr's salt in the given solution
CO2	Determination of acidity of given water samples/solutions.
CO3	Determination of alkalinity of given water samples/solutions.
CO4	Determination of pH of given water samples/solutions.
CO5	Estimate the amount of the chlorides in the given solution.

CO-PO Matrix:

CO	PO1	PO2	PO3	PO4	PO5	PO6	PO7
CO1	**3**	**-**	**-**	**-**	**1**	**1**	**1**
CO2	**3**	**-**	**-**	**-**	**2**	**1**	**1**
CO3	**3**	**-**	**-**	**-**	**2**	**1**	**1**
CO4	**3**	**-**	**-**	**2**	**2**	**1**	**1**
CO5	**3**	**-**	**-**	**-**	**2**	**1**	**1**

Course Delivery:

The course will be delivered through lectures, classroom interaction, group discussion, demonstration and practicals.

Conduction of experiments: Lecture 1 period + Experiment 2 periods.
Student must conduct experiment individually under the supervision of the staff-in-charge.

Lecture and Demonstration: 1 Period

1. Introduction of chemistry practical and its importance, safety precautions in maintenance of cleanliness and orderliness of chemicals in the laboratory.
2. Maintenance of apparatus and equipment.
3. Follow of Do's and Don'ts.
4. Maintenance of data in record book.
5. Write the procedure of the experiment before the commencement of each experiment.
6. Strict following of instructions given from time to time by the staff-in- charge.
7. Demonstration of each experiment by the staff in charge.

Course content

Volumetric Analysis: (22.5 Periods)

Volumetric Analysis by Titrimetric Method:-

Volumetric Analysis -Titration – Standard solutions - Concentration of solutions - Indicators –Self indicator - Acid base indicators - Selection of indicators -Endpoint of titration - Neutralization.

List of experiments:

1. Estimation of Mohr's salt by using 0.02M potassium permanganate solution.
2. Determination of acidity of water sample by using 0.02N NaOH solution.
3. Determination of alkalinity of water sample by using 0.02N H_2SO_4 solution.
4. Find out the pH of the given solution by using pH meter.
5. Estimate the chloride content present in water sample by using 0.0141N $AgNO_3$ solution.

<u>Specific Learning Outcomes</u>

Upon completion of the course, the student will have ability to

1. Estimate Mohr's salt by using standard potassium permanganate solution.
2. Determine the partial and total acidity of water sample by using 0.02N NaOH solution.
3. Determine the partial and total alkalinity of water sample by using 0.02N H_2SO_4 solution.
4. Find out the pH of the given solution by using pH meter.
5. Estimate the chloride content present in water sample by using 0.0141N $AgNO_3$ solution.

Reference Books:

1. Vogel's Inorganic Qualitative and Quantitative Analysis.
2. Practical chemistry by O.P.Pande & others.
3. Qualitative and quantitative analysis by Alex.

EXAMINATION & EXPERIMENTS		
S.NO	**EXAMINATION**	**EXPERIMENTS**
1	MIDSEM-I	Experiment No 1 & 2
2	MIDSEM-II	Experiment No 3 & 4
3	SEMESTER END EXAMINATION	Experiment No 1,2,3,4 and 5

Scheme of Valuation for SEE		
Sl. No.	**Particulars**	**Marks**
1	Identification of apparatus/equipment/chemical compounds/tools/etc.	2
2	Writing Principle and Procedure	5
3	Experiment and Observations	6
4	Calculation and Results	4
5	Viva-voce	3
Total		20

BOARD DIPLOMA EXAMINATION, (C-21)
MIDSEM – I
SECOND SEMESTER EXAMINATION
SC-209APPLIED SCIENCE LAB

TIME: 1 Hour **TOTAL MARKS: 20**

Instructions: (1) Answer both PART-A AND PART-B on **separate** answer sheets.

(2) Each question carries **TEN** marks.

PART-A (PHYSICS LAB)

Perform ONE experiment allotted by the examiner. 1 x 10 = 10

1. Determine the Focal length and focal power of given convex lens using U-V method.
2. Determine the value of acceleration due to gravity at your place sing Simple Pendulum.
3. Determine the value of acceleration due to gravity at your place sing Simple Pendulum by L-T^2 graph.

PART-B (CHEMISTRY LAB)

Perform ONE experiment allotted by the examiner. 1 x 10 = 10

1. Estimate the amount of Mohr's salt present in the given 500 ml of solution by using 0.02M potassium permanganate solution.
2. Determine the partial acidity of water sample by using 0.02N NaOH solution.
3. Determine the total acidity of water sample by using 0.02N NaOH solution

BOARD DIPLOMA EXAMINATION, (C-21)
MIDSEM – II
SECOND SEMESTER EXAMINATION
SC-209 - APPLIED SCIENCE LAB

TIME: 1 Hour **TOTAL MARKS: 20**

Instructions: (1) Answer both PART-A AND PART-B on **separate** answer sheets.

(2) Each question carries **TEN** marks.

PART-A (PHYSICS LAB)

Perform ONE experiment allotted by the examiner. 1 x 10 = 10

1. Determine the velocity of sound in air at room temperature by resonance method.
2. Determine the refractive index of a solid using travelling microscope.

PART-B (CHEMISTRY LAB)

Perform ONE experiment allotted by the examiner. 1 x 10 = 10

1. Determine the partial alkalinity of water sample by using 0.02N H_2SO_4 solution.
2. Determine the total alkalinity of water sample by using 0.02N H_2SO_4 solution
3. Find out the pH of the given solution by using pH meter.

BOARD DIPLOMA EXAMINATION, (C-21)
SEMESTER END EXAMINATION
SECOND SEMESTER EXAMINATION
SC-209 - APPLIED SCIENCE LAB

Time: 2 Hours] [Total Marks: 40

Instructions: (1) Answer both PART-A AND PART-B on **separate** answer sheets.

(2) Each question carries **TWENTY** marks.

PART-A (PHYSICS LAB)

Perform ONE experiment allotted by the examiner. 1 x 20 = 20

1. Determine the Focal length and focal power of given convex lense using U-V method.
2. Determine the Focal length and focal power of given convex lense by U-V graph method
3. Determine the value of acceleration due to gravity at your place sing Simple Pendulum.
4. Determine the value of acceleration due to gravity at your place sing Simple Pendulum by L-T^2 graph.
5. Determine the velocity of sound in air at room temperature by resonance method.
6. Determine the refractive index of a solid using travelling microscope.
7. Draw magnetic lines of force around a bar magnet placed in NN position of earth's magnetic field and locate neutral points.
8. Draw magnetic lines of force around a bar magnet placed in NS position of earth's magnetic field and locate neutral points.

PART-B (CHEMISTRY LAB)

Perform ONE experiment allotted by the examiner. 1 x 20 = 20

1. Estimate the amount of Mohr's salt present in the given one litre of solution by using 0.02M $KMnO_4$ solution.
2. Determine the partial acidity of water sample by using 0.02 N NaOH solution.
3. Determine the total acidity of water sample by using 0.02 N NaOH solution
4. Determine the partial alkalinity of water sample by using 0.02 N H_2SO_4 solution.
5. Determine the total alkalinity of water sample by using 0.02 N H_2SO_4 solution
6. Estimate the chloride content present in water sample by using 0.0141 N $AgNO_3$ solution
7. Find out the pH of the given solution by using pH meter.

PROGRAMMING IN C LAB

Course Title	Programming in C Lab	Course Code	CS-210
Semester	II	Course Group	Practical
Teaching Scheme in Periods(L:T:P)	1:0:2	Credits	1.5
Methodology	Lecture + Practical	Total Contact Hours :	45
CIE	60 Marks	SEE	40 Marks

Pre requisites

Basic knowledge of Computer Operation.

Course Content

Unit Number	Unit Name	Periods
1	Concepts of Algorithm, Flowchart and Program	**2**
2	Using Variables, Operators, Data-types	**4**
3	Decision making and Looping statements	**10**
4	Arrays and String programming	**8**
5	Concept of Functions.	**10**
6	Structure, union and Files	**11**
	Total	**45**

Course Objectives

1. Use the concepts of algorithm and flowchart for developing programs in C language.
2. Use variables, constants, data types, operators and Input / Output functions in programs.
3. Apply decision making and looping concepts for developing programs in C language
4. Implement the concepts of arrays and structures for a given problem.
5. Illustrate the use of functions in developing modular programming.
6. Creating and managing Files.

Course Outcomes

On successful completion of the course, the students will be able to attain below Course Outcome(CO):

Course Outcome		Experiment Linked	CL	Linked PO	Lab Sessions
CO1	Use the concepts of algorithm and flowchart for developing programs in C language.	1,2,3	**U, A**	**1,2,3,4,7**	**3**
CO2	Use variables, constants, data types, operators and Input / Output functions in programs	4,5,6,7	**U, A**	**1,2,3,4,7**	**3**
CO3	Apply decision making and looping concepts for developing programs in C language	8,9,10,11,12,13, 14,15	**U, A**	**1,2,3,4,7**	**10**
CO4	Implement the concepts of arrays and structures for a given problem	16,17,18,21	**U, A**	**1,2,3,4,7**	**14**
CO5	Illustrate the use of functions in developing modular programming	19,20	**U,A**	**1,2,3,4,7**	**10**
CO6	Creating and managing Files	22	**U,A**	**1,2,3,4,7**	**5**
					45

Legends: R = Remember U= Understand; A= Apply and above levels (Bloom's revised taxonomy)

Course-PO Attainment Matrix

Course	Program Outcomes						
	PO1	**PO2**	**PO3**	**PO4**	**PO5**	**PO6**	**PO7**
PROGRAMMING IN C LAB	**3**	**3**	**3**	**3**	**-**	**-**	**3**

References

1. Let Us C -- YeshwanthKanetkar BPB Publications
2. Programming in ANSI C -- E. Balaguruswamy Tata McGrawHill
3. Programming with C -- Gottfried Schaum'outline
4. C The complete Reference -- Schildt Tata McGraw Hill

Course Delivery

The course will be delivered through Demonstration and Practices.

List of Exercises:-

1. Exercise on developing algorithms
2. Exercise on drawing flowcharts
3. Exercise on structure of C program
4. Exercise on Keywords, identifiers, constants, variables
5. Exercise on data types and operators in a simple C program
6. Exercise on input and output of characters
7. Exercise on formatted input and output.
8. Exercise on simple if statement
9. Exercise on if else statement
10. Exercise on else if ladder statement
11. Exercise on switch statement
12. Exercise on conditional operator
13. Exercise on while statement
14. Exercise on for statement
15. Exercise on do...while statement
16. Exercise on one dimensional arrays
17. Exercise on two dimensional arrays
18. Exercise on string handling functions.
19. Exercise on Functions
20. Exercise on Recursion
21. Exercise on structures
22. Exercise on Files.

AI-211 - SKILL UPGRADATION

Course Title	Skill Upgradation	Course Code	AI-211
Semester	II	Course	Core
Teaching Scheme in periods	0:0:8	Credits	2.5
Methodology	Activities	Total Contact	120
CIE	Rubrics	SEE	Nil

Advanced English – Skills Upgradation

TASK:

LEVEL 1: Collection of material for learning skills

LEVEL2: Analysis of the material

LEVEL 3: Practice the activities

LEVEL 4: Assessment of the skills acquired

Activity before the activities:

Collect the material useful for learning Listening, Speaking, Reading, Writing (LSRW skills), Grammar and Vocabulary

1. *Collect newspaper clippings, books, puzzles, pictures, audio and video programmes in English*
2. *Talk to your classmates, seniors, alumni, teachers, successful people in job interviews and celebrities*
3. *Visit libraries to gather information on language learning skills*
4. *Visit useful websites for learning vocabulary and grammar.*

Activities:

1. Collect the prefixes, suffixes and roots and build vocabulary
2. Collect the vocabulary building games and activities. Practice them individually, in pairs and groups.
3. Learn different kinds of reading a text. Practice reading various kinds of reading material.
4. Collect the following reading material:

    a) Short stories (Read them aloud in the class.)
    b) Collect interesting / funny articles on science and technology, biographies and travelogues. (Display them on the board.)

5. Practice jigsaw reading

6. Practice dialogues on
    a) Fixing, rescheduling and cancelling appointments.
    b) Extending, accepting and declining invitations.
    c) Offering help, opinion and suggestions.
    (Dramatize the dialogues)
7. Identify the treasure hidden in the institute by giving directions and instructions to your team members. (Treasure Hunt game)
8. Collect different kinds of tables, pie charts, graphs, tree diagrams, etc. and interpret them using primary and secondary analysis.
9. Prepare a tree diagram on your family for three to four generations.
10. Identify and correct the errors in the given reading material.
11. Collect the resumes of celebrities or successful people in the job interviews and analyze them.
12. Listen to the audio clip and make notes.
13. Edit the rough copy of a project report.
14. Visit the vegetable market / a hospital / a sports complex / bus station and write a report.
15. Create an email id and write e-mails to your local leaders describing the problems in your village.

Note: The above activities are indicative. The teacher may assign any other activity relevant to the skills introduced in the semester.

COURSE OUTCOMES

CO NO	At the end of the course the students will have the ability to
201.1	Learn vocabulary and use them in professional and social interactions.
201.2	Comprehend the main idea and minute details related to engineering courses.
201.3	Communicate effectively in English in terms of basic sciences, mathematics and engineering fundamentals.
201.4	Learn English grammar to speak and write flawlessly so as to interpret the data.
201.5	Learn the mechanics of writing to make the technical writing practical and meaningful.
201.6	Make notes, write resumes, prepare cover letters, write technical emails and draft reports.

CO-PO Matrix

CO	PO1	PO2	PO3	PO4	PO5	PO6	PO7	Mapping POs
201.1	-	-	-	-	3		3	5,7
201.2	-	-	-	-	3	2	3	5,6,7
201.3	-	-	-	-	3	3	3	5,6,7
201.4	-	-	-	-	2	2	3	5,6,7
201.5	-	-	-	-	2	2	3	5,6,7
201.6		-	--	--	2		3	5,7

Method of evaluation of the student activities (Rubrics)

Model Rubric:

Sl. No	Sub activity	Performance			
		Excellent	**Good**	**Satisfactory**	**Need improvement**
1	**Step-1**	Data was collected from more than four sources.	Data was collected from three to four sources.	Data was collected from two sources.	Data was collected only one source.
2	**Step-2**	All the material and data required for the activity was accurately prepared based on the data collected independently.	Almost all the material and data required for the activity was accurately prepared based on the data collected independently.	The materials and data required for the activity were accurately prepared based on the data collected with the help of teacher.	The material and data required for the activity was inaccurately prepared .
3	**Step-3**	Procedures were outlined in a step-by-step fashion that could be followed by anyone & performed the activity effectively.	Procedures were outlined in a step-by-step fashion, require explanation & performed the activity effectively.	Procedures that outlined were complete with 1 or 2 gaps and require explanation & performed the activity normally.	Procedures that outlined were not sequential, & performed the activity in a poor way.
4	**Step-4**	Presented/ explained the information about the activity in logical, interesting sequence with attractive visuals or diagrams.	Presented/ explained the information about the activity in logical sequence with visuals or diagrams.	Presented/ explained the information about the activity in logical sequence with less visuals or diagrams.	Presented/ explained the information about the activity without sequence and visuals or diagrams.
5	**Conclusion / Summary**	Provided a detailed conclusion/ summary clearly based on the data and activity.	Provided a conclusion / summary clearly based on the data and activity.	Student provided a conclusion/ summary less effectively.	Conclusions / Summary was not relevant.

Note: Separate rubric may be prepared according to the activity.

STUDENT ASSESSMENT RUBRICS

Sl. No	**PIN**	**CO1**	**CO2**	**CO3**	**CO4**	**CO5**	**CO6**	**CO7**	**CO8**	**CO9**	**CO10**	**CO11**	**CO12**	**AVERAGE**

SKILL UPGRADATION IN - ENGINEERING MATHEMATICS

ACTIVITY ASSESSMENT Steps

1. **Mathematical concepts**
2. **Procedure**
3. **Explanation**
4. **Working with others**
5. **Mathematical errors**

ACTIVITIES

1 Prepare a presentation to describe various types of Straight lines.

2 Identify the geometrical shapes in and around your locality and give the details about them.

3. Prepare a comparative study of conic sections and their uses in engineering applications.

3. Prepare a detailed study report on differentiation using different methods.

4. List out and explain the applications of Differentiation.

5. Apply the differentiation in geometrical problems.

6. Apply the differentiation in rate measure problems.

7. Apply the differentiation to problem solving in finding maxima minima.

CO / PO - MAPPING OF ACTIVITIES

CO	PO1	PO2	PO3	PO4	PO5	PO6	PO7	PO8	PO9	PO10
CO1	3	2	2	1			1	2	2	3
CO2	3	2	2	1			1	2	2	3
CO3	3	2	2	1			1	2	2	3
CO4	3	2	2	1			1	2	2	3
CO5	3	2	2	1			1	2	2	3
CO6	3	2	2	1			1	2	2	3
CO7	3	2	2	1			1	2	2	3

Rubrics for Activity assessment

CATEGORY	**4**	**3**	**2**	**1**
Mathematical Concepts	Explanation shows complete understanding of the mathematical concepts used to solve the problem(s).	Explanation shows substantial understanding of the mathematical concepts used to solve the problem(s).	Explanation shows some understanding of the mathematical concepts needed to solve the problem(s).	Explanation shows very limited understanding of the underlying concepts needed to solve the problem(s) OR is not written.
Procedures	Typically, uses an efficient and effective procedure to solve the problem(s).	Typically, uses an effective procedure to solve the problem(s).	Sometimes uses an effective procedure to solve problems, but does not do it consistently.	Rarely uses an effective procedure to solve problems.
Explanation	Explanation is detailed and clear.	Explanation is clear.	Explanation is a little difficult to understand, but includes critical components.	Explanation is difficult to understand and is missing several components OR was not included.
Working with Others	Student was an engaged partner, listening to suggestions of others and working cooperatively throughout lesson.	Student was an engaged partner but had trouble listening to others and/or working cooperatively.	Student cooperated with others, but needed prompting to stay on-task.	Student did not work effectively with others.
Mathematical Errors	90-100% of the steps and solutions have no mathematical errors.	Almost all (85-89%) of the steps and solutions have no mathematical errors.	Most (75-84%) of the steps and solutions have no mathematical errors.	More than 75% of the steps and solutions have mathematical errors.

STUDENT ASSESSMENT by RUBRICS

S.NO	PIN	CO 1	CO 2	CO 3	CO 4	CO 5	CO 6	CO 7	AVERAGE

SKILL UPGRADATION – APPLIED PHYSICS

TASK

LEVEL 1: Concept, Ethical Data, Materials, Source (Library/internet/others)

LEVEL 2: Methodology/procedure

LEVEL 3: Analysis/experiment

LEVEL 4: Interpretation/inference/evaluation.

Activities:-

1. Construct a blowing pipe to detect dangerous gases in mines.
2. Construct model stethoscope with known materials.
3. Conduct awareness program on noise pollution in your college, colony. Prepare a video report.
4. Construct a second's pendulum with simple objects.
5. Prepare a power point presentation on photosensitive materials with detailed specifications.
6. Prepare a report on Lasers where they are practically used.
7. Prepare a power point presentation on application of optical fibers in medical and engineering field.
8. How can you produce electricity with a magnet? – (a) Develop a working model/ prepare a power point presentation with animation/ prepare drawings on a chart.
9. Construct an electric calling bell.
10. Setup a circuit on breadboard to verify Kirchhoff's voltage law.
11. Prepare a power point presentation on Superconductors and their practical applications with motion pictures embedded.
12. Collect various resistors, diodes and LEDs with specifications and compile on a card board.

NOTE: The above activities are indicative. The teacher may assign any other activity relevant to the course based on resources available.

Course Outcomes (CO)		Linked Pos	Activity Hours
CO1	Construction of a blowing pipe to detect dangerous gases in mines	PO1, PO2, PO3, PO4, PO5, PO6	3
CO2	Construction of model stethoscope with known materials	PO1, PO2, PO5, PO7	3
CO3	Conduct of awareness program on noise pollution in the college, colony and preparation of a video report.	PO1, PO2, PO5, PO6, PO7	3
CO4	Construct a second's pendulum with simple objects.	PO1, PO2, PO3, PO4	3
CO5	Preparation of PPT on photosensitive materials with detailed specifications	PO1, PO2	3
CO6	Preparation of report on lasers practically used	PO1, PO2, PO4, PO5, PO7	3
CO7	Preparation of PPT on application of optical fibers in medical and engineering field	PO1, PO2,PO4, PO5, PO6, PO7	3
CO8	Production of electricity with a magnet – working model, PPT with animation and drawings on a chart.	PO1, PO2, PO3,PO4	3
CO9	Construction of an electric calling bell	PO1, PO2, PO3, PO4	3
CO10	Construction of a circuit on breadboard to verify Kirchhoff's voltage law	PO1, PO2, PO3, PO4	3
CO11	Preparation of PPT on Superconductors and their practical applications with motion pictures.	PO1, PO2, PO3, PO4, PO7	3
CO12	Collection of various resistors, diodes and LEDs with specifications and installation on a card board	PO1, PO2	3

Rubrics for Task Assessments

General Scale for scoring student performance in Skill Upgradation

Type of Skill/Score	4	3	2	1
Data/Material Collection	All Data/Material was collected one time independently.	All Data/Material was collected more than one time independently.	All Data/Material was collected several times independently.	All Data/Material was collected several times with assistance.
Methodology/ Procedure	Procedures were outlined in a step-by-step fashion that could be followed by anyone without additional explanations.	Procedures were outlined in a step-by-step fashion that could be followed by anyone without additional explanations. Expert help was needed to accomplish this.	Procedures were outlined in a step-by-step fashion, but had 1 or 2 gaps that require explanation even after expert feedback.	Procedures that were outlined were incomplete or not sequential, even after Expert feedback had been given.
Activity/ Development	Quality of Skill is high.	Skill is mastered to the level of expectation.	Skill is present but with errors and omissions.	Skill needs improvement.
Interpretation/ summary	Student provided a detailed conclusion clearly.	Student provided a somewhat detailed conclusion clearly.	Student provided a conclusion with some reference.	No conclusion was apparent.

NOTE: *The above types of skills are indicative. The teacher may change the skills depending on type of activity.*

STUDENT ASSESSMENT (RUBRICS)

S. NO	PIN	Course Outcomes (Skill Activities)													AVERAGE
		CO 1	CO 2	CO 3	CO 4	CO 5	CO 6	CO 7	CO 8	CO 9	CO 10	CO 11	CO 12	CO 13	

SC-204 - ENGINEERING CHEMISTRY AND ENVIRONMENTAL STUDIES

Suggested Skill Upgradation Activities

Activity Assessment Steps:

Level-1: Concept, Data collection and summarization, Material etc

Level-2: Prepare Chart, explain the process, perform the experiment etc, and prepare a report etc

Level-3: Oral or power point presentation of the activity.

Level-4: Submission of report.

Activity – 1
Collect the data of the different methods of concentration of ore and present with PPT :
Activity – 2
Study the process of Corrosion of a metal under different conditions:
Activity – 3
Compare the Corrosion of different metals /alloys exposed to the same environmental conditions:
Activity – 4
Compare the Corrosion of metal with different shapes and surfaces under same environmental conditions:
Activity – 5
Study the Prevention of Corrosion of a metal by using different coating materials
Activity – 6
Study of plastics, recycling of plastics and their advantages and disadvantages
Activity – 7
Study of natural rubber and its uses
Activity – 8
Power point presentation on fossil fuels
Activity – 9
Study and suggest the measures to improve your environment related to air pollution
Activity – 10
Study and suggest the measures to improve your environment related to water pollution
Activity – 11
Study and suggest the measures to improve the college environment
Activity – 12
Construct a working model of Galvanic cell and explain its working.

Note: Any other skill upgradation activity related to the course may be taken up.

Mapping of POs to Student activities

S.No	Name of the activity	Linked POs
1	Collect the data of the different methods of concentration of ore and present with PPT	1, 6,7
2	Study the process of Corrosion of a metal under different conditions	1, 6,7
3	Compare the Corrosion of different metals /alloys exposed to the same environmental conditions	1, 6,7
4	Compare the Corrosion of metal with different shapes and surfaces under same environmental conditions	1, 5, 6,7
5	Study the Prevention of Corrosion of a metal by using different coating materials	1, 5, 6,7
6	Study of plastics, recycling of plastics and their advantages and disadvantages	1,5, 6,7
7	Study of natural rubber and its uses	1,5, 6,7
8	Power point presentation on fossil fuels	1,5, 6,7
9	Study and suggest the measures to improve your environment related air pollution	1,5, 6,7
10	Study and suggest the measures to improve your environment related water pollution	1,5, 6,7
11	Study and suggest the measures to improve the college environment	1,5, 6,7
12	Construct a working model of Galvanic cell and explain its working.	1, 6,7

<u>Method of evaluation of the student activities (Rubrics)</u>

Model Rubrics

S. No	Sub activity	Performance (Score)			
		Excellent (4)	Good (3)	Satisfactory (2)	Need improvement (1)
1	Level-1 (Data and Material collection)	All materials and data required for the activity were accurately prepared based on the data collected independently	Almost all materials and data required for the activity were accurately prepared based on the data collected independently	The materials and data required for the activity were accurately prepared based on the data collected with the help of teacher.	The materials and data required for the activity were inaccurately prepared .
2	Level-2 (Chart, Model, Exeperiment or Study)	Procedures were outlined in a step-by-step fashion that could be followed by anyone & performed the activity effectively.	Procedures were outlined in a step-by-step fashion, require explanation & performed the activity effectively.	Procedures that outlined were complete with 1 or 2 gaps and require explanation & performed the activity normally	Procedures that outlined were not sequential, & performed the activity in a poor way
3	Level-3 (Oral or Power point presentation)	Presented/ explained the information about the activity in logical, interesting sequence with attractive visuals or diagrams.	Presented/ explained the information about the activity in logical sequence with visuals or diagrams.	Presented/ explained the information about the activity in logical sequence with less visuals or diagrams.	Presented/ explained the information about the activity without sequence and visuals or diagrams.
4	Level-4 (Submission of Report)	Provided a detailed conclusion/ summary clearly based on the data and activity	Provided a conclusion / summary clearly based on the data and activity	Provided conclusion/ summary less effectively	Conclusion /summary was not relevant.

<u>Note</u>: The above rubrics are indicative. Separate rubrics may be prepared according to the activity. Minimum passing score is 2.5.