Satellite Navigation & THE Global positioning System

Syllabus :- Radio and satellite Navigation, GPS position location principles, GPS Receivers and Codes, Satellite Signal acquisition, GPS Navigation Message, GPS signal levels, GPS receiver operation, GPS C/A Code accuracy, Differential GPS

⇒ Radio and Satellite Navigation :-

* Prior to development of radio, navigation was by Compass and land-marks on the land and by the Sun and stars at sea. Neither techniques provides high accuracy and ship wrecks caused by in-accurate navigation and foggy weather were common occurence.

* GPS Can provide a Single navigation System with better accuracy and reliability than all earlier radio navigation aids. It can provide navigation of aircraft directly between airports, instead of indirectly via airways, while providing absolute position readout of latitude and longitude

* Differential GPS Can be used instead ILS (Instrument landing System) to provide required Straight line in the sky for an instrument approach to a runway, and can be linked to an autopilot to provide automatic landing of aircraft in zero visibility Conditions.

* GPS was preceded by an earlier Satellite navigation System called Transit, built for the U.S. Navy for ship navigation, which achieved much lower accuracy and became obsolete when GPS was introduced.

www.jntufastupdates.com

Scanned with CamScanner

* Transit system observe Doppler shift for position Calculation. Observation of the Doppler shift with time, which may need to be as long as 10 min, and a knowledge of the satellite orbit, allows calculation of receiver's position.

* There was never a sufficient number of transit satellites to provide continuous position data and the long time required to obtain an accurate position fix was disadvantage.

* A similar system called SARSAT, for search and rescue satellite is used to find emergency locator transmitters (ELTs) on aircraft that have crashed.

* Most general aviation aircraft carry an ELT, which turns on frequency at of 121.5 MHz when selected to high g forces, as might be experienced if the aircraft crashes.

* Almost 97% of ELT locations turn out to be false alarms the ELT was dropped (or) accidentally turned on. It seems probable that GPS and cellular phones (or) satellite phones will eventually replace the SARSAT system.

⇒ GPS Position Location Principles :-

The basic requirement of a satellite navigation system like GPS is that there must be four satellites transmitting suitable coded signals from known positions. Three satellites are required to provide the three distance measurements and the fourth to remove receiver clock error.

www.jntufastupdates.com

Scanned with CamScanner

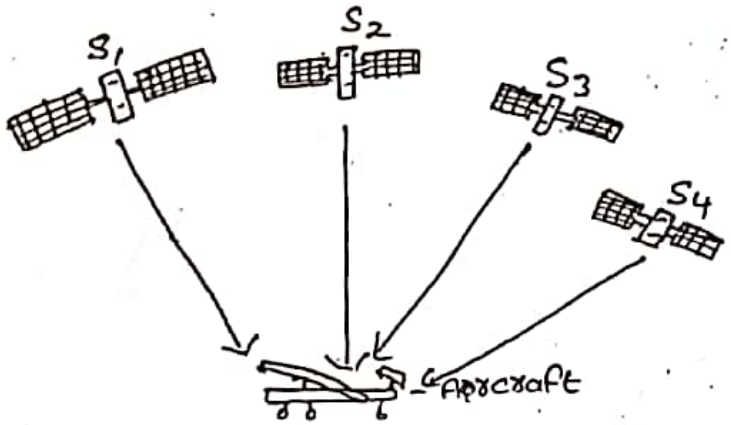

figure : General arrangment of position locations with GPS.

* The aircraft must receive signals from four GPS satellites to be able to determine its positions. The three satellites provide distance information when the GPS receiver makes three measurements of range, R_i from the receiver to the three known points.
* Each distance R_i can be thought of as the radius of a sphere with a GPS satellite at its center. The receiver lies at the intersection of three such spheres, with a satellite at its center.
* GPS satellites each carry four atomic clocks which are calibrated against time standards in the GPS control stations around the world.
* The result is GPS time, a time standard that is available in every GPS satellite. The accuracy of an atomic clock is typically 1 part in 10^{11}. However, it too expensive to include an atomic clock in most GPS receivers, so standard crystal oscillator with accuracy of 1 in 10^5 or 1 in 10^6 is used instead
* ~~However, it is too expensive to include an atomic clock in most GPS receivers, so a standard crystal oscillator with an accuracy~~

www.jntufastupdates.com
Scanned with CamScanner

* The receiver clock is allowed to have an offset relative the GPS satellite clocks so when a time delay measurement is made, the measurement will an error caused by clock offset.

Position location in GPS :-

* GPS receivers use the WGS-84 parameters to calculate the orbits of GPS satellites with accuracy required for precise measurement of the range of the satellites. The z-axis of the coordinate system is directed through the earths North pole and x-and y-axes are in the equatorial plane
* The x-axis passes through the Greenwich-meridian- the line of zero longitude on earth's surface and the y-axis passes through the 90° east meridian.
* The ECEF coordinate system rotates with the earth. The receiver coordinates are (U_x, U_y, U_z) and four satellites have coordinates (x_i, y_i, z_i) where $i = 1,2,3,4$.
* There may be more than four satellites signals available but we use only four signals in a position calculation. The measured distance to satellite i is called a Psuedorange, PR_i, because it uses the internal clock of the receiver to make a timing measurement that includes errors caused by receiver clock offset

www.jntufastupdates.com
Scanned with CamScanner

Pseudorange, denoted as PR_i, is measured from the propagation time delay T_i between the satellite (number i) and GPS receiver, assuming the EM waves travel with velocity c.

$$PR_i = T_i \times c$$

The distance R between two points A and B in a rectangular coordinate system is given by

$$R^2 = (x_A - x_B)^2 + (y_A - y_B)^2 + (z_A - z_B)^2$$

The equation which relate pseudo range to time delay are called range equations.

$$(X_1 - U_x)^2 + (Y_1 - U_y)^2 + (Z_1 - U_z)^2 = (PR_1 - Tc)^2$$
$$(X_2 - U_x)^2 + (Y_2 - U_y)^2 + (Z_2 - U_z)^2 = (PR_2 - Tc)^2$$
$$(X_3 - U_x)^2 + (Y_3 - U_y)^2 + (Z_3 - U_z)^2 = (PR_3 - Tc)^2$$
$$(X_4 - U_x)^2 + (Y_4 - U_y)^2 + (Z_4 - U_z)^2 = (PR_4 - Tc)^2$$

www.jntufastupdates.com

Scanned with CamScanner

* The four unknowns are the location of the GPS receiver (U_x, U_y, U_z) relative to the center of the earth and clock offset T - called clock bias in GPS terminology.

* The receiver position is then referenced to the surface of the earth, and can be displayed in latitude, longitude and elevation.

* Typical accuracy for low cost GPS receiver using the GPS C/A code is 30m defined as a 2DRMS error. The term DRMS means the distance root mean square error of the measured position relative to the true position of the receiver.

* Selective availability and atmospheric propagation effects all cause errors in the timing measurement made by GPS receiver, leading to the position location errors.

* The atmospheric and ionospheric introduce timing errors because the propagation velocity of GPS signals deviates from the assumed free space value.

* The stations observe the GPS signals and compute the corr error in position as calculated from GPS data. This informa can then be broadcast to all GPS users as a set of correction to be applied to GPS measurements. The system is called wide area augmentation system (WAAS).

* For example an airport can determine the local meas error in GPS and broadcast this information to GPS users. So that greater accuracy can be obtained with C/A code rec

www.jntufastupdates.com
Scanned with CamScanner

* This is one form of differential GPS (DGPS). More complex forms of differential GPS use a reference station which transmits the signals received from GPS satellite so that phase comparisions can be made by the receiver.
* With lengthy integration times and a sophisticated phase comparision receiver, differential GPS accuracies of 1cm can be obtained.

GPS Time :-

* The clock bias value 'T' which is found as part of the position location calculation process can be added to the GPS receiver clock time to yield a time measurement that is synchronized to the GPS time standard.
* The crystal oscillator is the stable one but it also have temperature variations constraints which effects the frequency generated by the crystal oscillator. This is enough to produce errors.
* Every GPS receiver is automatically synchronized to every other GPS receiver any where in the world through GPS time. This makes every GPS receiver a super clock, which knows time more accurately than any other time standard.
* The time standard on board each GPS satellite consists of two cesium clocks plus two rubidium clocks. An atomic clock uses the fundamental resonance of the cesium (or) rubidium ... reference to lock a crystal oscillator

www.jntufastupdates.com
Scanned by CamScanner
Scanned with CamScanner

* In the GPS Satellites, the master oscillator is 10.23MHz; all code rates, the L1 and L2 RF frequencies are multiples and submultiples of 10.23MHz. ~~all code rates, the L1 and the L2 RF~~

* The atomic clocks are updated by the controlling ground stations to keep them with in 1μs of universal time coordinated (UTC) and the navigation message broadcast by each satellite contains information about its current clock errors relative to GPS time. (UTC is a world wide time standard. Green which mean time is equal to UTC).

⇒ GPS Receivers and Codes :-

* GPS Satellites transmit using pseudorandom sequence (PN) codes. All satellites transmit a C/A code at the same carrier frequency, 1575.42MHz called L1, using BPSK modulation.

* The C/A code has a clock rate of 1.023 MHz and C/A code sequence has 1023 bits, so the PN sequence lasts exactly 1.0ms.

* The exact values of frequencies are known about 0.005 Hz lower than stated here to allow for relative effects caused by high velocity of the satellites in their orbits (3.865 km/s)

www.jntufastupdates.com
Scanned with CamScanner

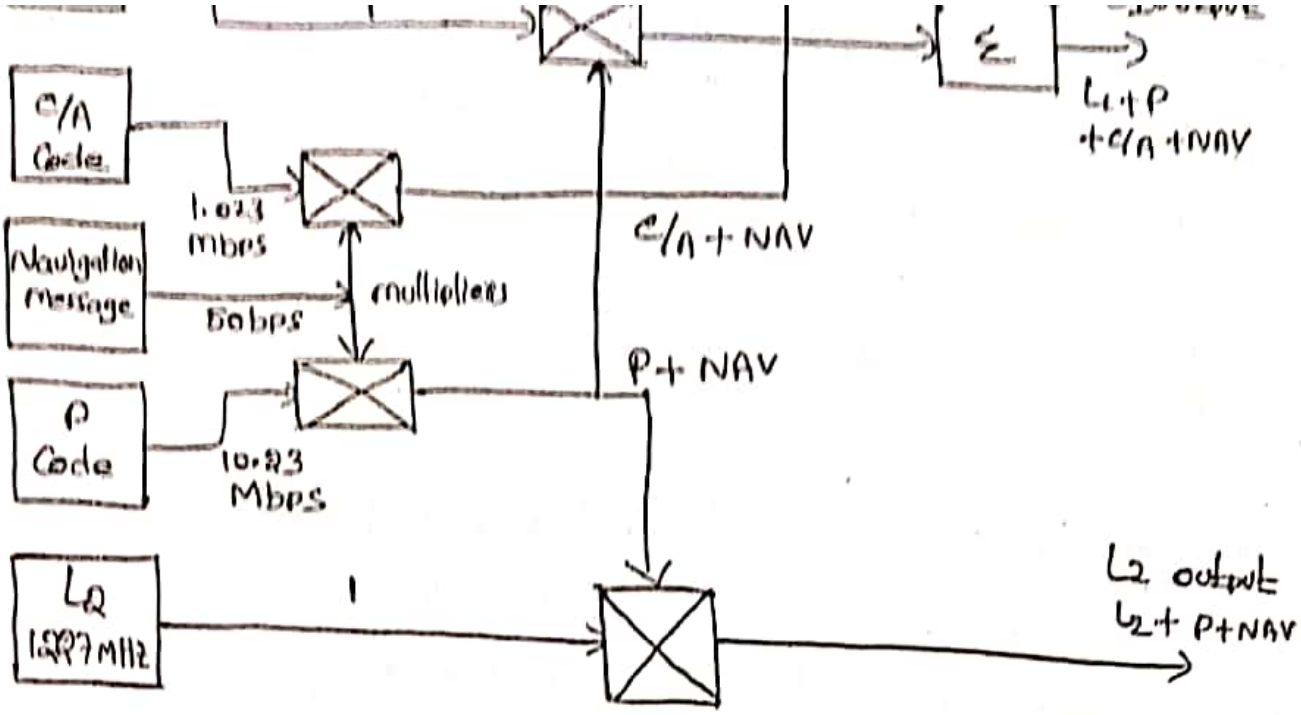

Figure :- Signal generation in a GPS Satellite.

* The P code is transmitted using BPSK modulation at the L2 carrier frequency of 1227.6 MHz (120 × 10.23 MHz) and also transmitted with BPSK modulation on the L1 carrier frequency in phase quadrature with the C/A code BPSK modulation

* The C/A and P code transmissions from all GPS satellites are overlaid in the L1 and L2 frequency bands making GPS a direct sequence spectrum (DS-SS) system.

* At most, 12 GPS satellites can be seen by the receiver at any one time, so the coding gain in spread spectrum must be sufficient to over come the interference created by 11 wanted signals while recovering the twelth wanted signals.

www.jntufastupdates.com
Scanned with CamScanner

The C/A Code :-

* The C/A Codes transmitted by GPS Satellites are all 1023 b Gold Codes. GPS C/A Gold codes are formed from two 10 bit m-Sequences, Called G_1 and G_2, by multiplying together the G_1 and G_2 sequences with different time offsets
* An m-Sequence is a maximum length pseudo-random (PN) Sequence, which is easy to generate with a shift register and feedback taps.
* A shift register with n stages can generate a pn Sequenc $2^n - 1$ bits in length. The bit pattern is set by the feedbac taps and combining logic of the shift register.

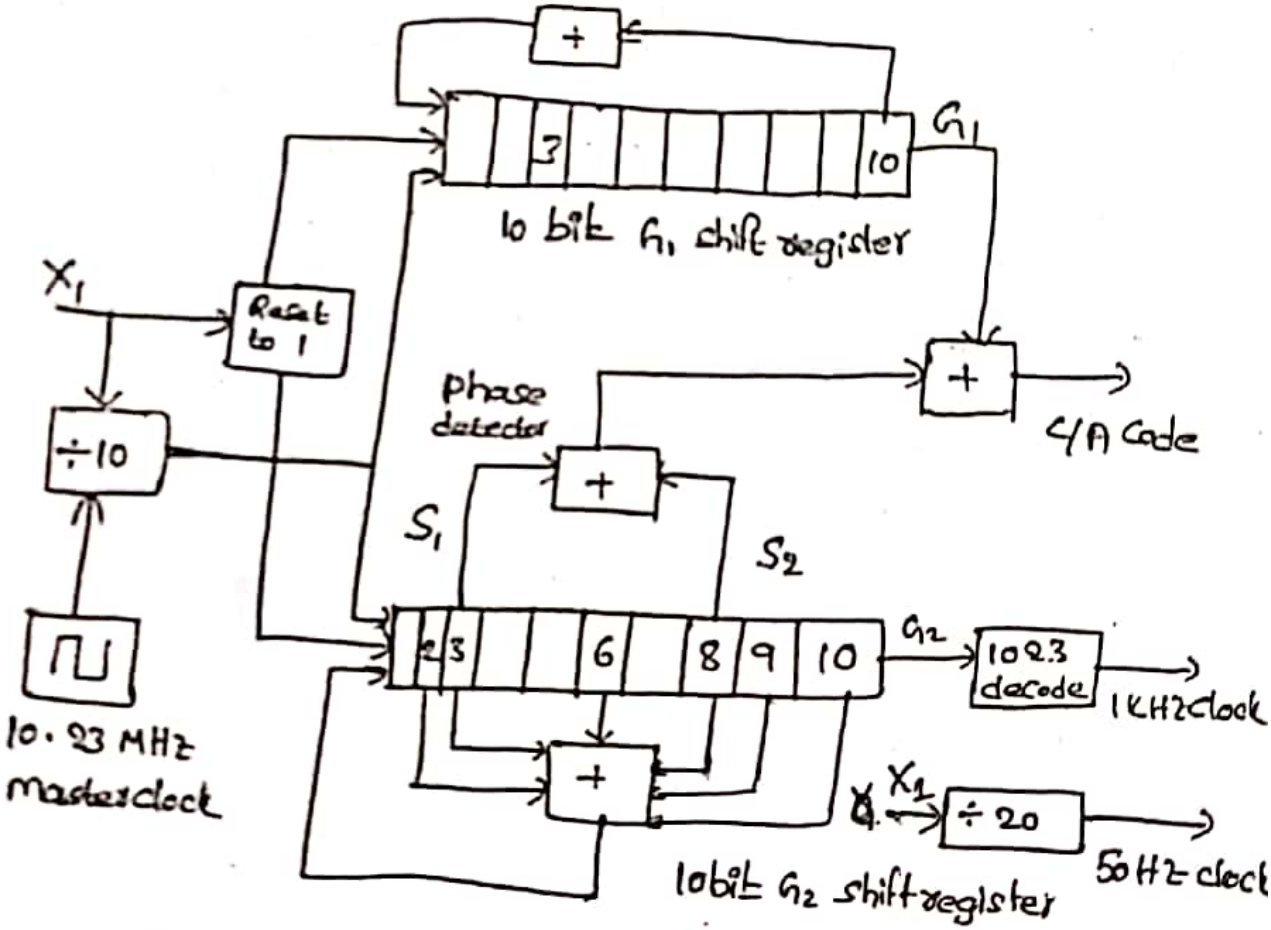

Fig : C/A Code generator

www.jntufastupdates.com
Scanned with CamScanner

* The C/A Code for a particular Satellite is created with an algorithm that includes the identification number of the GPS Satellite, thus creating a unique Code for each Satellite. The Satellite with ID number i has a C/A Code Sequence $C_i(t)$

$$C_i(t) = G1(t) \times G2(t + 10iT_c)$$

Where T_c = clock period for the C/A code.

* There are 64 Gold Sequences available for satellites numbered 1 through 64. A total of 100 Gold Sequences can be correlated using the algorithm in above equation but not all the Sequences have sufficiently low cross correlation properties, and reference 4 states that only 37 are actually used in GPS System.

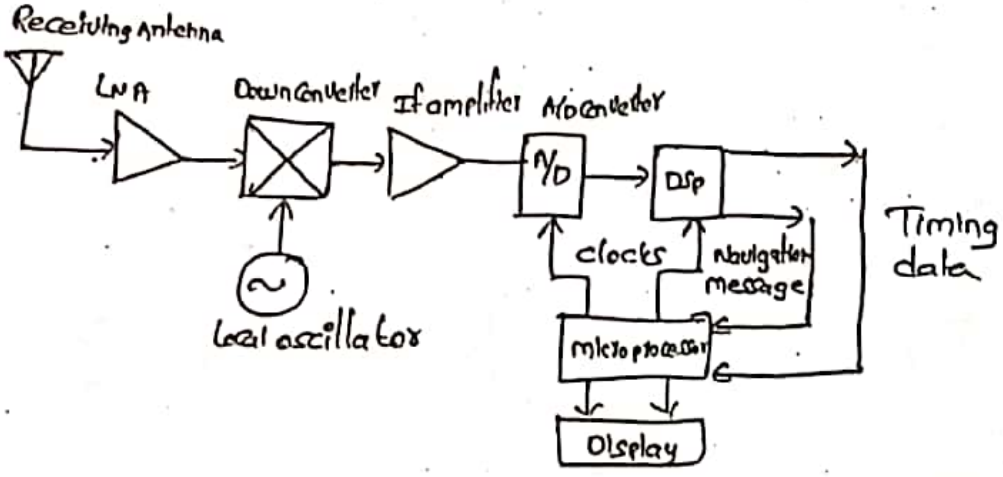

fig:- Simplified GPS Receiver

* Above figure shows a simplified block diagram of a C/A code GPS receiver. The antenna is typically a circularly polarized Patch antenna with an LNA mounted on printed circuit board

* A Conventional Superhet receiver is used to generate IF signal in a bandwidth of about 2 MHz, which is sampled using I and Q and processed digitally.

www.jntufastupdates.com
Scanned with CamScanner

* The digital portion of the receiver includes a C/A generator, a correlator and a microprocessor that make the timing measurements and calculate the receivers ...

⇒ Satellite Signal ACQUISITION :-

* The GPS receiver must find the starting time of unique C/A code for each of four satellites. This is done by correlating the received signal with the store C/A codes, as in any direct sequence spread spectrum system.

* Usually the receiver will automatically select the four strongest and correlate them if the selected signal have close pseudo ~~random~~ ranges, then the receiver have to correlate 37 possible C/A code until it can correlate with one.

* Once correlation is obtained, the data stream (called navigation message) from that satellite can read by the receiver. The data stream contains the information about the adjacent satellite. So, once one signal is correlated, the receiver no longer need to search all other 36 possible codes to find next satellite.

* If the starting time for the locally generated code was not selected correctly, correlation will not be obtained immediately. The ~~process~~ locally generated code is then moved forward one bit in time, and correlation is attempted again.

Scanned with CamScanner

* The process is continued 1023 times until all possible starting times for locally generated code have been tried

* If the satellite with particular C/A code is not visible, no correlation will occur and lock will not be achieved. It takes a minimum 1s to search all 1023 bit positions of 1023 bit C/A code.

* So in a typical case, it will take atleast 15s to acquire the first satellite. Many receivers search for given C/A code several times before moving to the next code, so several minutes may elapse before correct C/A code is found given no other information.

* Once one C/A code is found, the remaining satellites can then be acquired in a few seconds because their IDs are known from the data transmitted in the navigation message of each satellite.

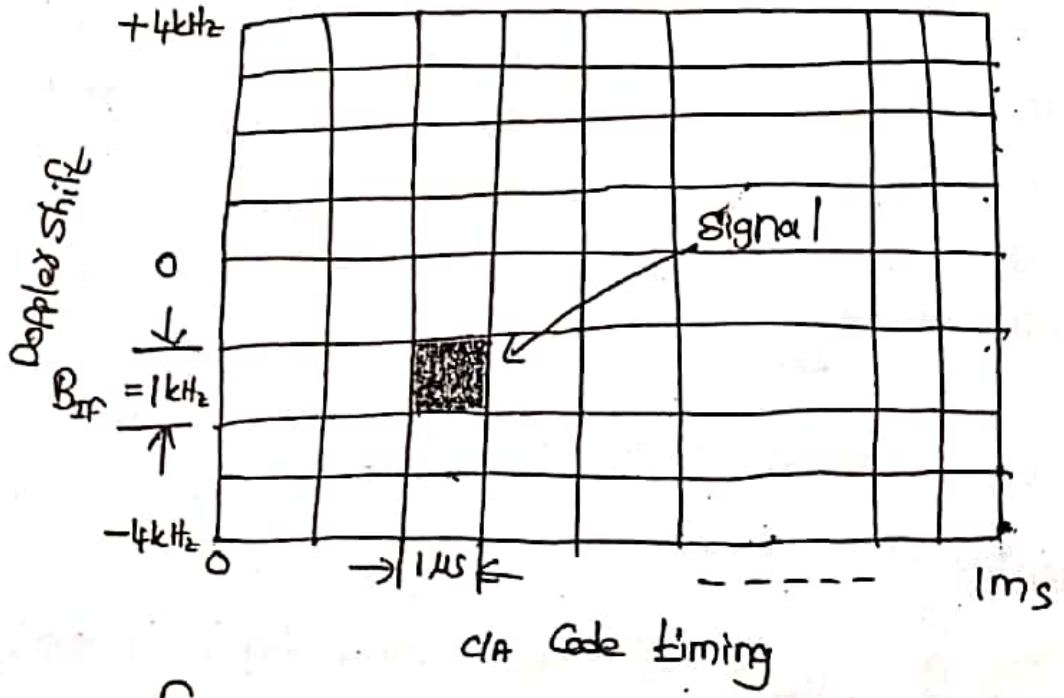

figure : Code Synchronization and Doppler tracking matrix

www.jntufastupdates.com
Scanned with CamScanner

* Although it takes only 20s on average to lock to the C/A code of one satellite, the receiver must find the Doppler freq offset for at least one satellite before correlation can occu

* The receiver band width is matched to the bandwidth of C/A code. The theoritical noise bandwidth of the C/A code receiver is 1.023 MHz and the velocity of the satellites is 3.865 km/s.

* The angle between the spacecraft velocity vector and a receiver on Earth is 76.1° when GPS satellite is at the horizon, so the maximum Doppler shift in the L1 signal $V_r/\lambda = 4.872$ kHz ignoring the effect of earth rotation.

* Allowing the satellite to reach an elevation angle of 5° before it is used for position measurement limits the Doppler shift must ~~by~~ eight Doppler frequency shifts. ~~upto~~ ~~upto~~ Doppler shift must accomidate by the receiver to ±4kHz.

* Above figure illustrates the search process. There are eight possible Doppler shifts for each signal, and illustrate the search process.

- There are eight possible Doppler shifts for each signal and 1023 possible code positions, giving 8184 possible signal states that much searched.

www.jntufastupdates.com
Scanned with CamScanner

* The P code for the ith satellite is generated in a similar way to the C/A code. The algorithm is

$$P_i(t) = X1(t) + X2(t + iT_c)$$

where T_c is the period of X1 sequence, which contains 15,345,000 bits and repeats every 1.6s. The X2 sequence is 37 bits longer. The P code repeats after 266.4 days, but is changed every 7 days for security reasons.

GPS Navigation Message:-

* The Navigation message contains a large amount of information that is used by GPS receivers to optimize the acquisition of satellite signals and calculate position.

* The navigation message is sent at 50 bps by BPSK modulation of C/A and P codes.

* The extracted navigation signal is extracted by a 50-bps BPSK demodulator that follows the C/A (or) P code correlator.

* The complete navigation message is 1500 bits sent as 30-s frame with 5-subframes. However, some information is contained in a sequence of frames, and complete data set requires 12.5 min for transmission.

Scanned with CamScanner

Header	Telemetry Message : health of satellite, handover word
Subframe 1	Satellite clock correction data. Age of transmitted data.
Subframe 2 and 3	Ephemerics for satellite.
Subframe 4	Almanac data for satellites 25 and higher. Ionospheric model
Subframe 5	Almanac data for satellites 1-24. Health data for satellite 1-2

* Subframes 1, 2, and 3 repeat all data every 30 s. Subframes 4 and 5 repeat every 30s, but transmission of the full data set requires 25 subframes over a period of 12.5 min.

* The calculation of position in a GPS receiver requires very accurate knowledge of the location of satellite at time that measurement of pseudo range is measured to an accuracy of 2.4m, we must know the satellite position to an even greater and that require very accurate calculation of GPS satellite orbits.

* The GPS System uses modified WGS-84 data to define the earth's radius, kepler constant, and the earth's rotational rate.

* Data on the speed of EM waves is taken from the International Astronomical union.

* The WGS-84 data set also includes a very detailed description of the earth's gravitation field which is essential for precise location of the satellites in their orbits.

www.jntufastupdates.com

Scanned with CamScanner

⇒ GPS signal levels :-

* GPS satellites have an array of helical antennas that provide gain toward the earth, and low transmitters, leading to EIRP values in the range 19 to 27 dBW.

* The C/A code transmitted by the satellite is a direct sequence spread spectrum signal, so the C/N ratio in the C/A code's RF bandwidth will be less than 0 dB.

* The low C/N ratio of the spread spectrum signal is converted to usable S/N by correlation of the code sequences, which adds a despreading gain to the C/N ratio.

* The theoretical processing gain of a direct sequence spread spectrum signal is equal to the ratio of chip rate to the bit rate in the spreading sequence, but losses in the correlation process always make practical gains a little lower.

* For the C/A code transmitted at 1.023 Mbps and a 1-ms correlation time, the theoritical processing gain is 1023, or 30.1 dB. The corresponding process gain for the P code is 40.1 dB.

* The GPS receiver can pick up signals from upto 10 satellites at the same time. The RF energy from the satellite spread spectrum transmissions adds to noise in the reciever as an interference term I.

* The interference from the nine C/A code spread spectrum signals of equal power is given by the sum of received power from each satellites

www.jntufastupdates.com

Scanned with CamScanner

$$I = 9 \times 10^{-16} W \Rightarrow -150.5 dBW$$

* The thermal noise power, N, in a noise bandwidth of 9 for a noise temperature of 273 K is KTB_n watts, where

$$N = -141.2 dBW \Rightarrow 7.59 \times 10^{-15} W$$

The noise and interference powers must be added in wa not in decibels:

$$N + I = 8.49 \times 10^{-15} W \Rightarrow -140.7 dBW$$

Hence the worst case C/N for one C/A code signal in this scenario is

$$C/(N+I) = -160.0 - (-140.7) = -19.3 dB$$

* The navigation message has a 50-bps bit rate, and each bi rate, and each bit extends over 20 C/A code correlation periods.
* The C/A code correlator output is passed through a 50 Hz band width filter which integrates the 20 pulses from the correlator to give a single message bit, in the form of a 50 bps BPSK signal.

www.jntufastupdates.com
Scanned by CamScanner
Scanned with CamScanner

Timing Accuracy:-

* The position location process requires an accurate measurement of the time arrival of the code sequence at the receiver.

* The output of C/A code correlator is a 1μs wide pulse that repeats every millisecond. The accuracy with which a timing measurement can be made on single pulse is given by approximat relationship

$$\delta t \approx \frac{1}{[B_n \sqrt{S/N}]} \text{ seconds.}$$

Where δt is the rms timing error.
B_n is noise bandwidth of RF channel
S/N ratio is the signal to noise power ratio for pulse in noise bandwidth B_n

The S/N ratio after correlator is

$$S/N = C/N + G_p - \text{losses.}$$

Where G_p is the correlator processing gain. for C/A code

$$G_p = 10\log 3 = 30.1 \text{ dB}$$

&

$$S/N = -19.3 + 30.1 \text{ dB} - \text{losses}$$
$$= 11.7 \text{ dB} - \text{losses.}$$

If we assume the specification value for S/N of 11.7dB and loss of 1.7dB, $S/N = 10\text{dB}$, a power ratio of 10.

Scanned with CamScanner

The theoritical noise band width of the Correlator is

$B_n = 1MHz$.

$$\delta t \simeq 1/[10^6\sqrt{10}]s = 0.316\,\mu s.$$

* A typical Gps receiver will update the display no more than twice a second, So the pulses from the Correlator can be averaged over a period of half a second, which will decrease the rms error by $\sqrt{500} = 22.4$ to an rms value of 14ns, assuming randomly distributed errors.

www.jntufastupdates.com

Scanned with CamScanner

GPS Receiver Operation :-

* A C/A Code GPS receiver must be able to correlate signals from at least four satellites calculate time delays, read the navigation message, calculate the orbits of the GPS satellites and calculate position from pseudoranges.

* Most C/A Code GPS receivers use an IC chip set contains 12 parallel correlators. This allows the receivers to process signals from upto 12 satellites at the same time which helps keep all signals synchronized.

* Some simpler receivers use a single correlator and process four satellite signals sequentially, with consequent lower accuracy.

* The received GPS signals are converted to a suitable IF frequency in the front end of the receiver, and then processed to recover the C/A codes.

* The IF signal in the GPS receiver will consists of the sum of a number (up to 12) of signals from visible GPS satellites. The IF carrier signal has several BPSK modulation applied to it by the satellites, and when received on earth has been doppler shifted by satellite and earth motion.

* The IF signal from N GPS satellites in view is

www.jntufastupdates.com
Scanned by CamScanner
Scanned with CamScanner

$$S(t) = \sum_{i=1}^{N} \{ A_i C_i(t) D_i(t) \sin[(\omega_i + \omega_d)t - \phi_i(d_i) + \phi_i] \quad \text{—(1)}$$

Where A_i is the amplitude of received Signal

$C_i(t)$ is the Gold Code modulation

$D_i(t)$ is the navigation message modulation

ω_i is the IF frequency of the received Carrier

$\phi_i(d_i)$ is the phase shift along the path

ϕ_i is the phase angle of transmitted Signal.

ω_d is the Doppler shift of the received singal

* The receiver must measure $\phi_i(d_i)$ in Eq(1) as a time c in order to obtain the pseudorange for each of the N satellites View, and it must recover the $C_i(t)$ modulation by correlation.

* The $D_i(t)$ modulation Contains the navigation message as a Bol Bpsk modulation of $C_i(t)$ Signal. Both the $C(t)$ and $D(t)$ Signa are modulated onto the Carrier of the satellite Signal by binary shift keying and therefore have Values ± 1.

* Demodulation of Bpsk Signals requires a locally generated Car which is locked to the phase of the received Carrier, and fo quency recovery of the data signal requires a bit clock the is locked to the bit rate of received signal.

* The delay lock loop shown in figure takes advanta of Coherent nature of GPS/CA Signals so that the VCO be both a time reference for C/A Code Signals and also the Chip clock

www.jntufastupdates.com

Scanned with CamScanner

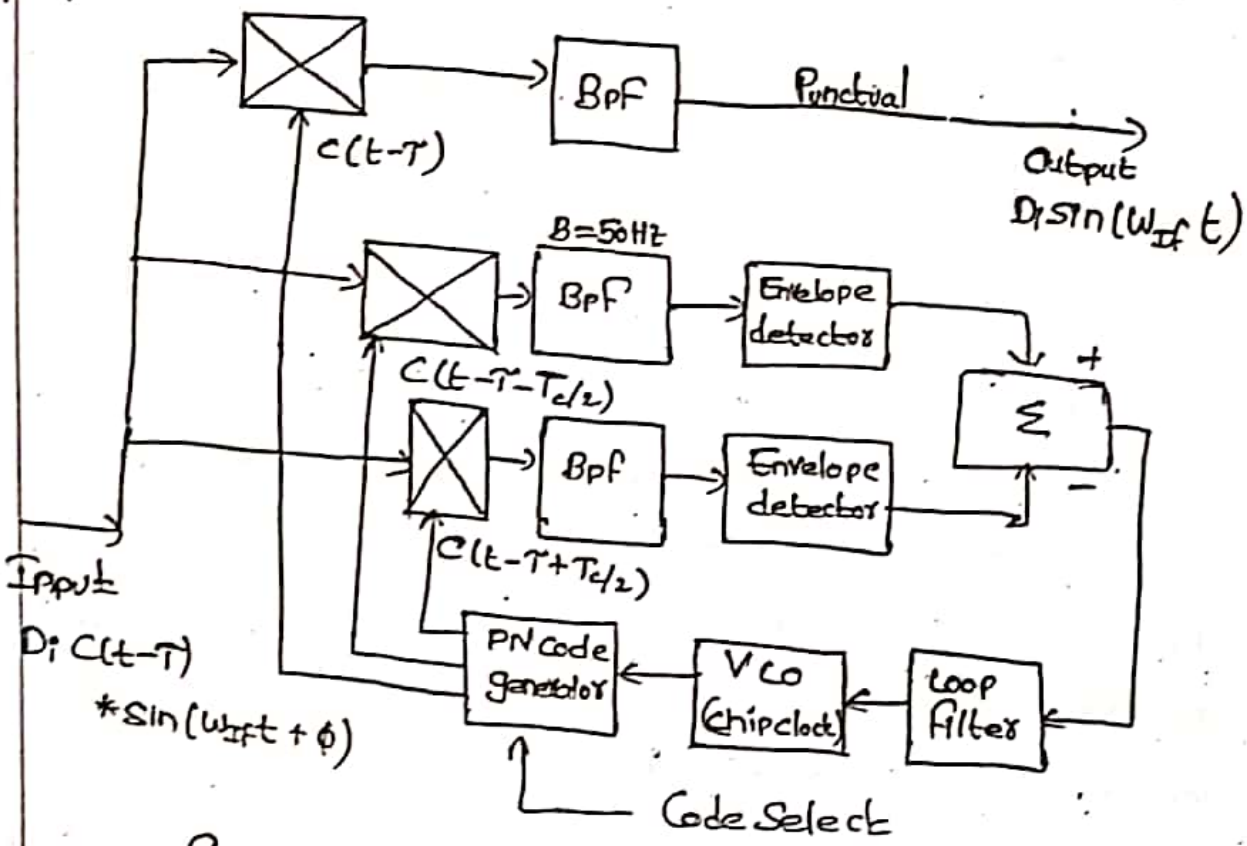

Figure: Non Coherent Code lock loop & navigation message recovery.

* The delay lock loop has three paths : punctual, early (half chip ahead) late (halfchip behind). The delay lock loop steers the chip clock so that the punctual output can be used to drive the C/A code generator.

* The early-late channels in the delay lock loop generate output signals which steer the phase of the VCO so that navigation message acquired correctly.

* The output of the C/A code correlator with Doppler corrected IF frequency for the satellite signal with code number M is

$$x(t) = A_m R(T_m - \tau) D_m(t) \sin[\omega_m(t) - \phi_m(t_m) + \phi_m] + n(t) \quad \text{—— (2)}$$

Where $R(T_m - \tau)$ is the auto correlation function of the wanted code number M,

www.jntufastupdates.com
Scanned with CamScanner

$n(t)$ is the output from Cross correlation with all other codes.

* The despread IF Carrier as Bpsk modulated by the navigation message $D_m(t)$

$$y(t) = A_m R(T_m - \tau) D_m(t) \sin[(\omega_m(t) - \phi_m(t_m) + \phi_m] + n(t) \quad \text{—} (3)$$

The IF Carrier Signal is limited to remove any amplitude variations, which sets $A_m = 1$, then

$$y'(t) = R(T_m - \tau) D_m(t) \sin(\omega_m(t) - \phi_m'] + n(t) \quad \text{—} (4)$$

The demodulated message signal is

$$z(t) = R(T_m - \tau) D_m(t) + n'(t) \quad \text{—} (5)$$

* Provided that the correlation peak of $z(t)$ crosses the threshold and $n'(t)$ doesn't we can recover the data message $D_m(t)$ correctly.

* If everything works correctly in the receiver, the S/N of the signal $y'(t)$ is at least 17 dB, so there will be no bit errors.

www.jntufastupdates.com

Scanned with CamScanner

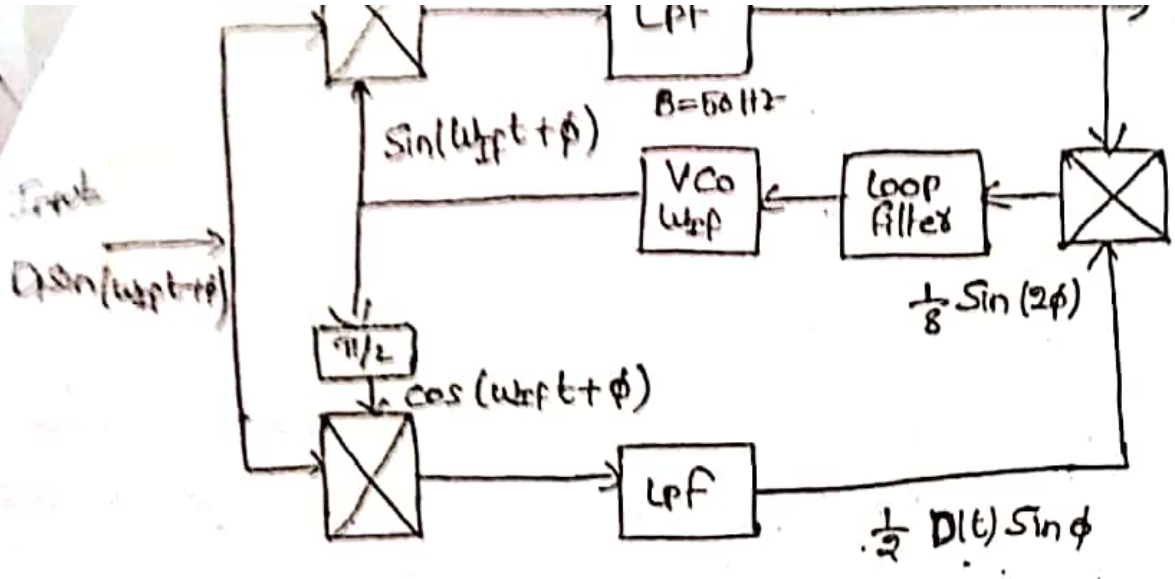

figure: Costas loop. LPF, Low pass filter

* Above figure shows a costas loop which is often used as the demodulator for low speed BPSK signals such as the 50bps GPS navigation message.
* The loop has an I channel and a Q channel driven by a VCO. The VCO frequency is set by the sum of the outputs from the I and Q channel detectors, which steers the VCO phase such that the I channel is in phase with the signal.
* The I channel output is then (ideally) a zero ISI waveform which can be integrated and sampled to recover the navigation message bits.

Scanned with CamScanner

⇒ GPS C/A Code ACCURACY :-

The major sources of error in a GPS receiver that calculates its position are:

Satellite clock and ephemeris error.
Selective availability (when switched on)
Ionospheric delay (advance)
Received noise
Multipath.

* The range error introduced by the ionosphere and the troposphere can be partially removed by receiving identical signals at two different carrier frequencies.
* This technique is used by high precision P code receivers. The P code signal is transmitted on the L1 carrier at 1575.42MHz, in phase quadrature with the C/A code signal. The P-code is also transmitted on L2 carrier at 1227.60
* Algorithms are used in the P code receiver to calculate the net delay of the signal caused by the ionosphere then to remove the errors from calculated ranges
* Receiver position is calculated in (x, y, z) coordinates, and errors in x, y, and z depend on elevation angle of satellite the satellite geometry, and other parameters in the error b

www.jntufastupdates.com
Scanned with CamScanner

* To account for these, will have different level errors in x, y, and

* To account for these differences several dilution of precision factors (DOP) are defined. A DOP factor multiples the basic position measurement error to give a large error caused by the particular DOP effect.

Dilution of precision : HDOP, VDOP, and GDOP

HDOP :- Horizontal dilution of precision is one of the most important DOP factors for most GPS users. It provides an error metric for x and y directions, in the horizontal plane. A typical HDOP value is 1.5, and it is often the smallest of DOP.

There are may DOP factors in GPS. The more important ones are HDOP, VDOP, Geometric (DOP) other DOP's include position (PDOP), & Time DOP.

In general, VDOP and GDOP are most likely to degrade in the accuracy of GPS position measurements.

VDOP is is most important in aircraft position measurements whose height shows the where height's above the ground is a critical factor especially when landing.

www.jntufastupdates.com

Scanned with CamScanner

⇒ Differential GPS :-

* The most accurate forms of differential GPS use the relative phase of the many signals in the GPS transmissions to increase the accuracy of timing measurements.

* Suppose that you could count the number of cycles of the 1575MHz L1 carrier wave between a satellite and a GPS receiver, and that GPS satellites are stationary for the length of time it takes to make the count at two separate locations.

* In principle, measurements which compare the phase angle of the received L1 carriers from several GPS satellites could therefore be used to detect receiver movements at the centimeter level. This is called differential phase (or) kinematic DGPS

* DGPS can make phase measurements and time of arrival comparisions for various GPS signals at two different locations and resolve motion between the two locations.

If one of the receivers is a fixed reference station, it is then possible to locate the second GPS receiver very accurate with respect to that fixed location

The satellites are moving and measurements over a considerable tim are required to resolve ambiguity to the centimeter level.

www.jntufastupdates.com
Scanned with CamScanner

* The P-code can be used for real time differential measurement without knowledge of pcode itself, because only a comparision of the time of arrival of code bits is required.

* In Wide Area Augmentation System (WAAS) developed by FAA for aircraft flying in north America, 24 WAAS receive station continously monitor their position as calculated from C/A codes of all visible satellites in the GPS system.

* The stations also use the pcode transmission to make accurate differential measurements of the pseudorange to each visible satellites.

* The 24 WAAS stations send their data to a central station with an uplink to a GEO satellite. The central station validates the data, combines all the information, and sends a sequense of pseudorange correction data all GPS users via satellite.

* The central station also determines whether any of the data is in error, and sends a warning signal called an integrity message to instruct aircraft not to use the GPS system (or) particular satellite, because the data are not reliable.

www.jntufastupdates.com
Scanned by CamScanner
Scanned with CamScanner

a GPS Satellite.

* A Conventional GPS receiver with suitable software extract the pseudorange error values from the WAAS Satellite transmission and obtain markedly improved accuracy in its position determination

www.jntufastupdates.com
Scanned with CamScanner