Unit-V

MicroControllers 8051

Introduction of 8051 micro controller

MicroController: Micro Controller is a single purpose programmable Semiconductor Ic. It includes microprocessor IO ports, timers counters, interrupts, memory fabricated into a single chip.

It is happened because of VLSI technology (Very large Scale Integration technology)

Micro Controllers are available from 4 bit to 32 bit

Ex: 8051 - 8 bit microcontroller
PIC - 16 bit micro controller etc

Important features of micro Controller (8051)

1) Clock Speed is 11.059 MHz to 20 MHz
2. It is having two general purpose registers name A & B
A - Accumulator register
B - Base register

and also have Special registers They are
R_0, R_1 R_2 R_3 R_4 R_5 R_6 R_7

The father of microcontroller is 8051 Or 8031

It holds 8 bit CPU (8085)

It has 8 bit Stack pointer, 18 bit data pointer

It Supports two 16 bit timers (T_0 and T_1)

It has 4 IO ports They are
port 0
port 1
port 2
port 3

www.Jntufastupdates.com Scanned by CamScanner

It also includes power controller register of 8 ...

It has two external interrupts. They are

i) NMI

ii) INTR

10. It has two external three internal interrupts. They are

1) lCall - long Call (It permanently stop the program)

2) SCall - short Call

3) return

11) In micro controller inbuilted memory

128 bytes of internal RAM

4 KB of internal ROM

12) It has 8-bit program Status bar.

It is Operated in full duplex mode

i.e All ports are bidirectional mode

It has 8 bit data lines and 6 Address lines

Functional block diagram of 8051

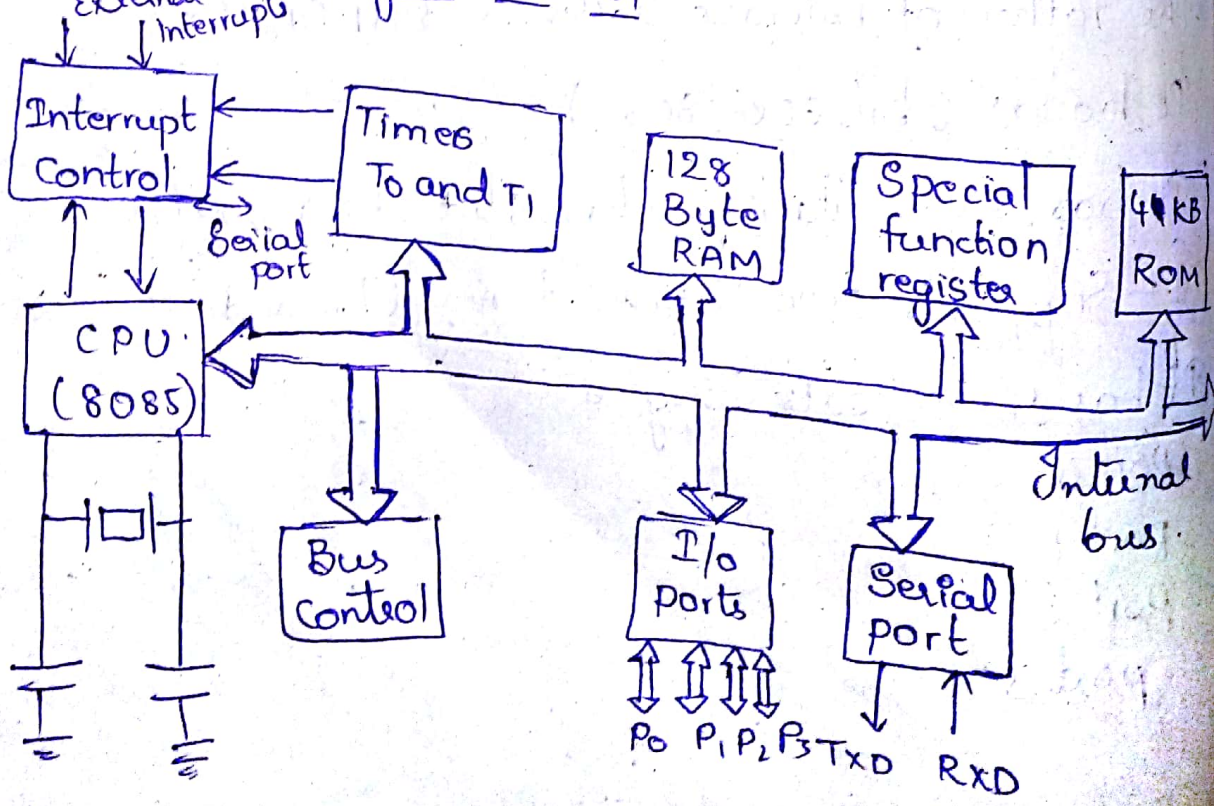

www.Jntufastupdates.com Scanned by CamScanner

→ 8051 is the hardward architecture means Seperated memory for program code and data.

→ In this. CPU is nothing but microprocessor. It holds the instructions.

Interrupt Controlr

→ It is used for the execution of the program. INTR, NMI.

→ A part of 8259 is inbuilt in. 8051 microcontroller

→ Timers and Counters are Used to Speed up the Operation Or to Synchronise the Operation

→ Here the timers are 16 bit timers.

→ Again the timers are divided into lower and upper.

Special function registers

Here registers are Used to hold the data temporarily and directs the data. from Various location to the buses.

Buses are 3 types

1. Addressbus
2. Data bus
3. Control bus.

Bus is an interfacing channel to transfer the data

Here the Communication is Serial and hence it is full duplex.

The 8051 Supports 10 registers.

A, B, $R_0 - R_7$

A - Accumulator

B - Base.

$R_0 - R_7$

www.Jntufastupdates.com Scanned by CamScanner

128 bytes RAM

(00H - 1FH) 32 bytes	16 bytes	80 bytes
R0 - R7 1. Bank0	(20-2F)	(30 - 7F)
2. Bank1		
3. Bank2		
4. Bank3		

→ R0 - R7 is the programmable registers

→ Accumulator and base registers are Special purpose registers.

→ 32 bytes of memory banks

→ 16 bytes of memory for addressing purpose.

→ 80 bytes of memory for Special programming purpose.

→ 8051 has 4KB of ROM.

Serial port:

It ~~performs~~ Operates ~~Serial port~~ two types of Communication.

1. Serial Communication - (Serial port)
2. Parallel Communication - (I/O port)

Serial port:

It is Used to increase the Speed of Operation with Various baudrate.

TXD - Transmitter.

RXD - Reciever.

I/O ports:

It is ~~bide~~ bidirectional Input Output data ports

www.Jntufastupdates.com Scanned by CamScanner

Here I/O ports are 4 ports

1) Port0 - P0.0 - P0.7.
2) Port1 - P1.0 - P1.7
3) Port2 - P2.0 - P2.7
4) Port3 - P3.0 - P3.7.

Each port is 8 bit bidirectional port.

Pin diagram of 8051

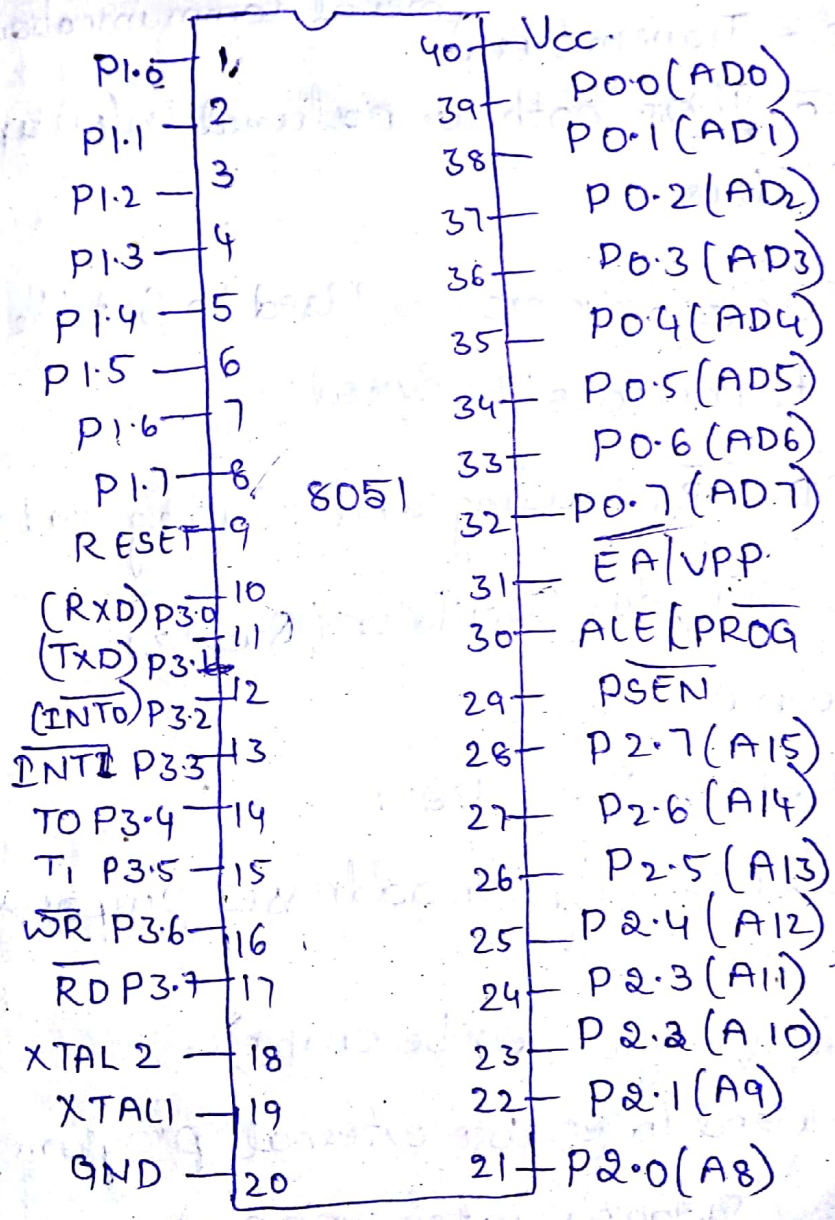

8051 is available in 40 pin dual in line package.
Each port is 8 bit port
Pin1 to Pin8. P1.0 to P1.7 (bidirectional port) Sig

www.Jntufastupdates.com Scanned by CamScanner

These 8 lines are Used by port 1 of I/O purposes

Pin9: Reset - Reinitialisation of micro Controller - (Input)
Input to 8051

Pin10: 11, 12, 13, 14, 15, 16, 17 - P3.0 - P3.7.
These are multiplexed I/O with Special functions
Used by port 3 of 8051

Pin10: RXD - Reciever.
Pin11: TXD - Transmitter. } Serial Communication

Pin12: $\overline{INT0}$, $\overline{INT1}$ These both are external Interupters given by the User.

T0, T1 These two timers are Used to Set the time and also to increase the Speed.

Pin16,17 $\overline{RD}$, $\overline{WR}$ (Reading and Writing data)

XTAL1 Pin18. Crystal Oscillator. (Quartz)

Pin20: Ground.

Pin21-28 Port2. P.2.0 - P.2.7.
This port is Used Only for addresses purposes ~~the data~~

Pin29 $\overline{PSEN}$ (Program Strobe enable)
This pin is Used to enable external program

Pin30 ALE (Address latch enable)
To Seperate address Signal with the data.

Pin31 ($\overline{EA}$/VPP) $\overline{EA}=0$.
Enable-EA This Signal is Used to Select the ROM Addresses $EA=1$ (~~ROM~~ EPROM)

www.Jntufastupdates.com Scanned by CamScanner

$P_{0.0}$ to $P_{0.7}$ (Pin 32-39)

Multiplex addresses and data lines.

V_{CC} - Pin 40

This pin is Connected to the positive terminal of power Supply.

www.Jntufastupdates.com Scanned by CamScanner

Architecture of 8051

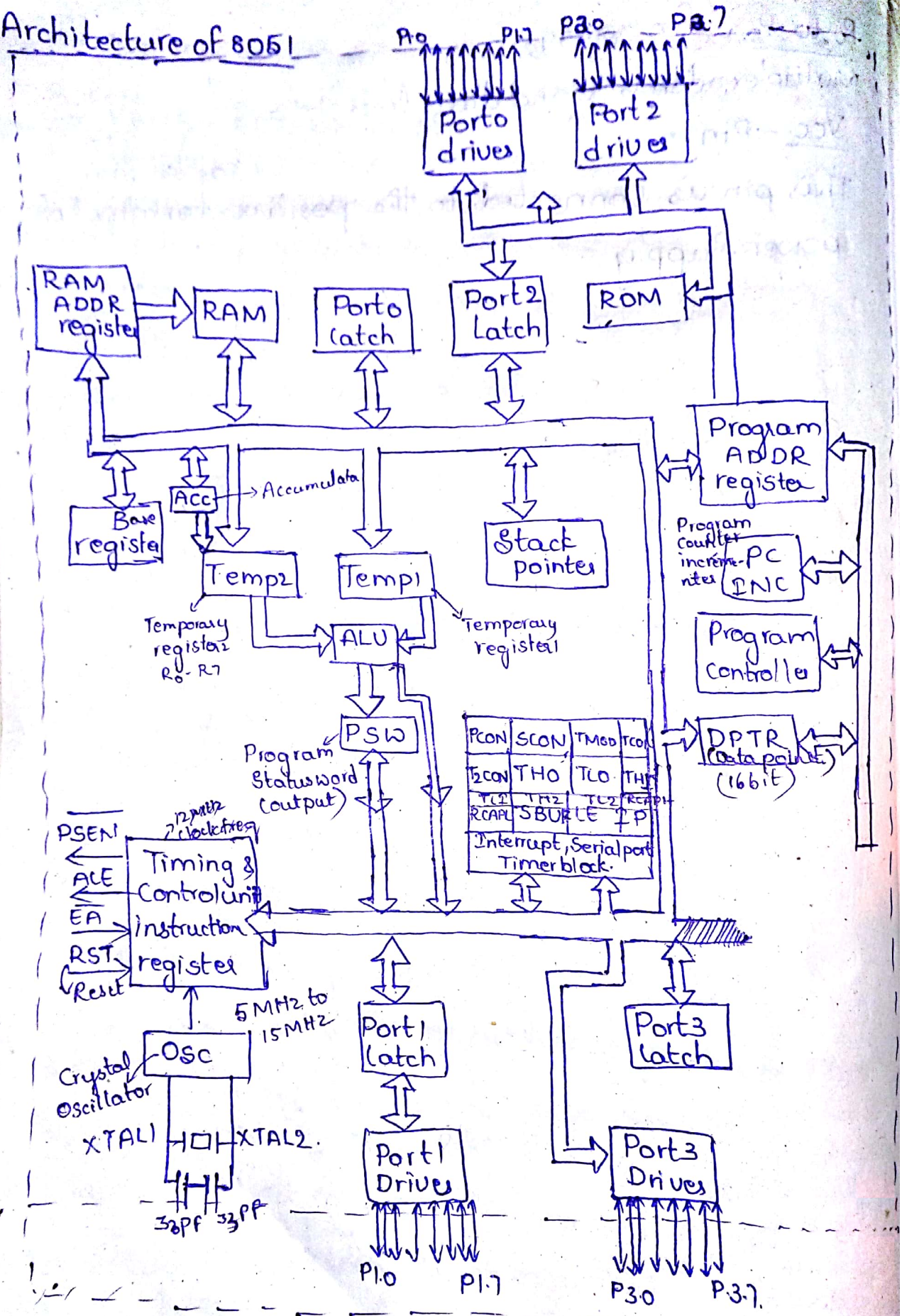

www.Jntufastupdates.com
Scanned by CamScanner

Driver: It is a programmable driver interface are used to provide interface b/w user to the system

Modelling structures

1) Hardwad - Microcontroller.

2) Wannewan.

The capacitor bypasses the extra current to the ground. It acts as a protector.

The Oscillator O/p is always Sine wave

PCON - Power Controller - To Stabilize different Voltage rating.

SCON - Serial Controller used to control Serial data

TMOD, TCON, T2CON are timer Controllers. for timing and Counting purposes.

CE - latch Enable.

differences between microprocessor and micro Controller

Micro processor	Micro controller
1) Microprocessor is a programmable Semi Conductor device Controls a dataflow from input devices to Output through CPU [Microprocessor] by fetching, decoding and executing the data from memory	1) Micro Controller is a programmable Semi conductor Controller It executes fetched data in a memory and Send Output to external devices
2) Executed results is shown by flags in 8086	2) The executed result is shown by PSW in 8051

www.Jntufastupdates.com Scanned by CamScanner

3) The microprocessor is having 1MB of memory	3) 8051 is having 128 kb of RAM and 4 kb of ROM
4) The microprocessor is having 5MHz of clock frequency	4) The microcontroller is having ≈12MHz of clock frequency
5) Seperated register for program. AX, BX, CX, DX, SI, DI, SP, BP, IP, ES, DS, SS, CS, flags	5) In 8051 registers are A, B, R0-R7.
6) Microprocessor is a Single chip it is having number of instructions	6) Microcontroller is a Single chip having no of inbuilted peripheral device
7) It a general purpose device	7) It is a Special purpose device.

Register Set of 8051

Register is a Space Used to Store the data temporarily. There are two types of register Set in 8051

1) General purpose registers
2) Special purpose register.

1) General purpose register

It is also Called register banks. The Size of general purpose register is 32 memory locations of internal RAM

Scanned by CamScanner

divided into 4 banks i.e bank0 bank1 bank2 banks shown in below:

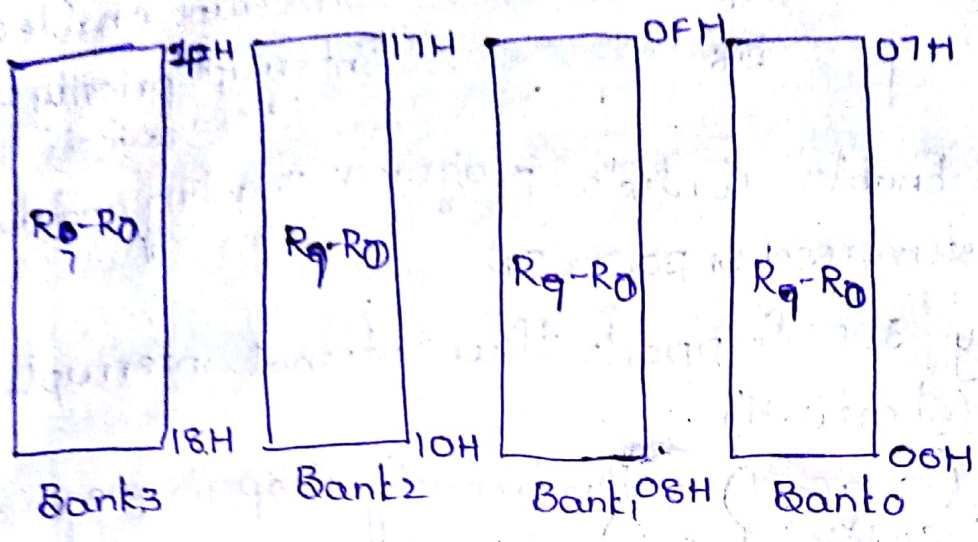

(Memory location. 00 - 1FH)

In the fig the 8 registers in each bank refferedas as R_7-R_0 can be active at a given point time.

These registers Can be Used for data Storage and data movements temporarily.

Instructions Using these registers will be faster than instructions Using another memory locations.

Special function registers

There are 21 Special function registers like in the range 80H - FFH of internal RAM.

Name	Address in Hexa	Function
A	E0	Accumulator
B	F0	Arithmetic Or base register or Math register

Scanned by CamScanner

DPL	82	Data pointer lower
DPH	83	Data pointer higher
IE	A8	Interrupt enable control
IP	B8	Interrupt priority control (FIFO fashion)

Interrupt Enable controls program enabling and disabling after System reset or power ON.

Generally 8051 Supports three internal interrupts i.e

SCALL (shortcall)

LCALL (longcall) - Permanently stop the program.

ACALL (Absolute call)

RETI (Return Interrupt)

P_0 (Port 0)	80	Port 0
P_1 (Port 1)	90	Port 1
P_2 (Port 2)	A0	Port 2
P_3 (Port 3)	B0	Port 3
P_C (Program Counter)	-	Program Counter
PCON	87	Power Controller
PSW	D0	Program Status Word (Flag)
SBUF	99	Serial port data buffer
SCON	98	Serial Controller
SP	81	Stack pointer
TCON	88	Timer or Counter Control
TMOD	89	Timer mode or Counter mode Control
TH0	8C	Timer Zero high byte
TH1	8D	Timer One high byte

Scanned by CamScanner

TL0	8A	Timer Zero lower byte
TL1	8B	Timer One lower byte

PSW (Program Status word)

It shows the Status of 8051 after the operation of ALU.

D7	D6	D5	D4	D3	D2	D1	D0	
C	Ac	F0	RS1	RS0	OV	X	P	⇒ PSW.

Register Selection.

RS1	RS0	
0	0	- Bank0
0	1	- Bank1
1	0	- Bank2
1	1	- Bank3

→ Overflow → 0 - No overflow, → 1 - Overflow

↓ undefined

D0 - P → 0 - even parity, 1 - odd parity.

→ Carry

→ Auxilary Carry flag

→ user flag (general purpose)

Memory Organisation of 8051

→ 8051 has inbuilted memory.

→ Memory is used for Storing program code and Variable data.

It Contains two inbuilted memory

→ 128 bytes of internal RAM

→ 4 kb of internal ROM also

→ 64 kbytes of external data memory - SRAM

→ 60 kbytes of internal program memory - EPROM

Scanned by CamScanner

Internal RAM Organisation

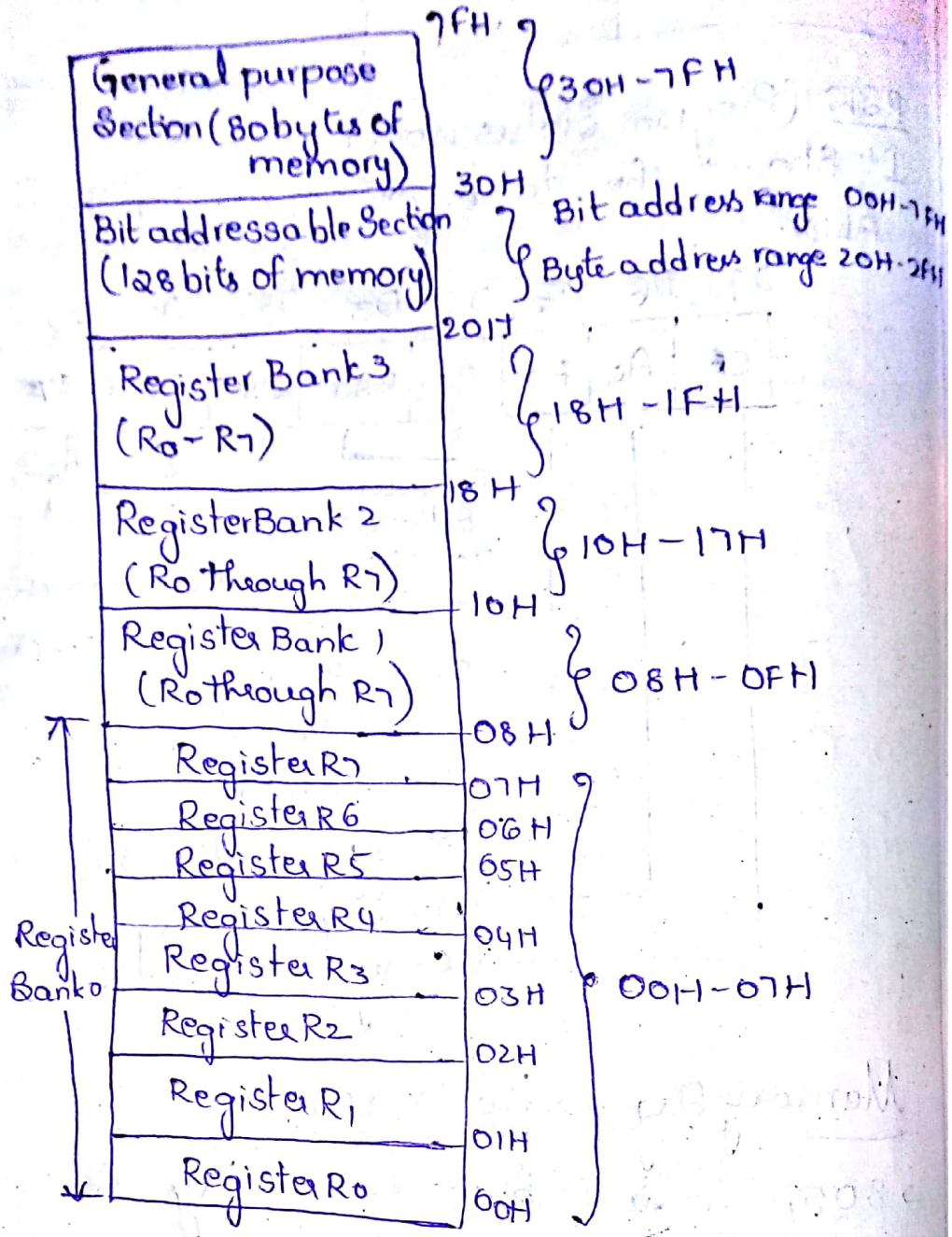

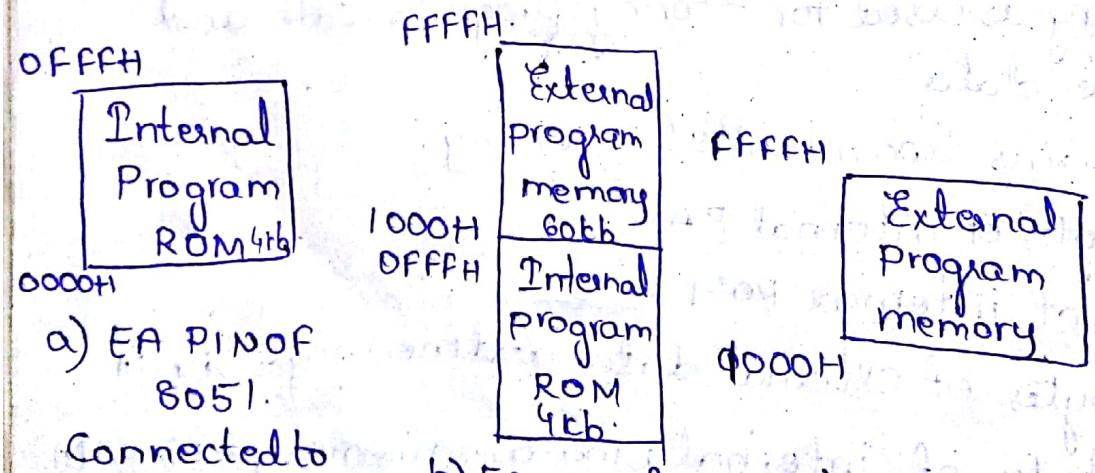

a) EA PIN OF 8051 Connected to logic High.

b) EA Pin of 8051 Connected logic High

c) EA Pin of 8051 Connected to logic low.

Program Memory Organisation

Scanned by CamScanner

Bit addressable Section Used for read and Write through 20H-7FH for read and Write without disturbing remaining bits

This bits are available for user purpose

30H-7FH memory holds Special function registers for read and Write Operation.

Program Memory

Pin+31 $\overline{EA}$/VPP (External Access)

If $\overline{EA}$=1 (It Selects internal ROM)

$\overline{EA}$=0 (It

External RAM

64 kbytes of external data memory.

Here the 64 kilobytes of memory Used for Variable external data purpose.

The range is 0000_H - $FFFF_H$

This memory Can be accessed through instruction MOVX and DPTR.

I/o ports of 8051

There are 4 I/o ports in 8051

port0, port1, port2, port3.

port0 is a bidirectional I/o port Used for input Output Operations and also holds addresses and datalines.

There are 8 addresses and datalines ($P_{0.0}$ - $P_{0.7}$)

www.Jntufastupdates.com Scanned by CamScanner

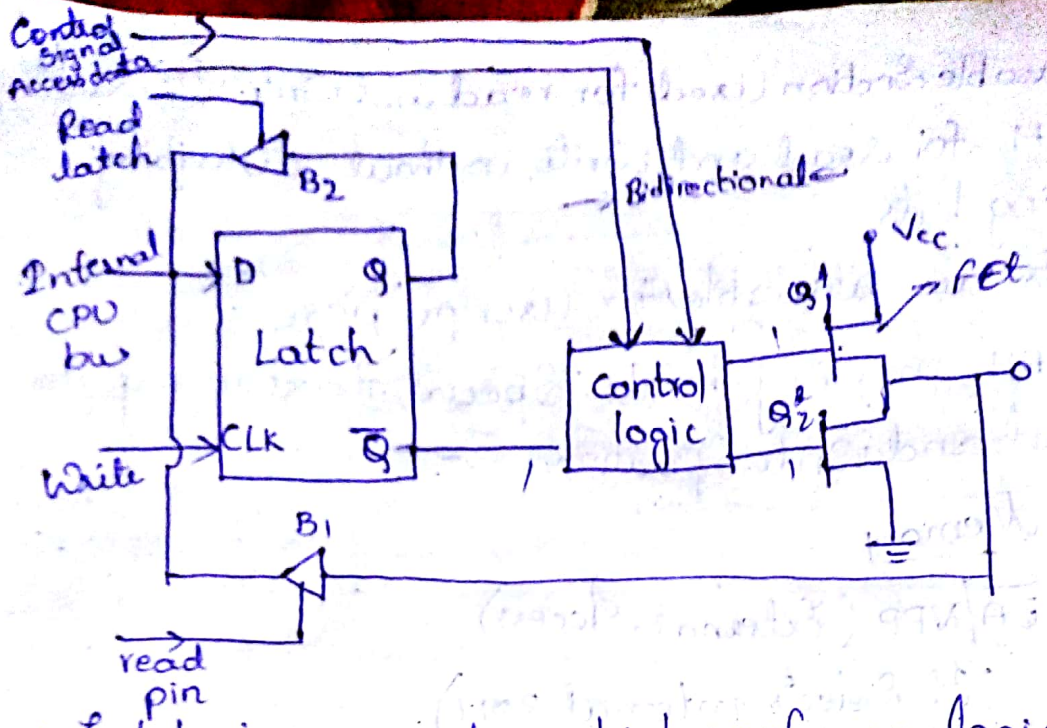

→ Latch is a register which performs logical Operation
→ Latch is independent of the clock Signal.
→ It is the reverse of flipflop.

D	Q	$\overline{Q}$
0	0	1
1	1	0

(Case: iii) In bidirectional mode: if Control logic = 1 It transfers address if Control logic = 0 the data Signal will come out

→ Control logic is nothing but a gate to Control FET's
→ Vcc is to Control the load.

Port 0 performs 3 Operations

It is Configured as Input, Output and bidirectional.

1) Input: (Port 0 as I/P)

Case: 1 D = 1, Q = 1, $\overline{Q}$ = 0

Then Q_1 = OFF Q_2 = OFF. Pin = high impedance State

At this time we Can write the data Or read the data.

Scanned by CamScanner

It means Output is in high impedance State

Case 2 D = 0 Q = 0 $\overline{Q}$ = 1

Q_2 is in ON State Q_1 is OFF State

logic low returns to the D-latch

This will effectively ground the pin.

Hence a logical low Output is achieved by writing low at input.

To float the O/p a external pull ups are required

For Configuration port as bidirectional a Control logic Circuit Comes to the Operation and controls the Q_1 transistor.

A Control logic allows a logic high at the gate of the Q_1 transistor, Q_1 Comes to the ON. and Q_2 is OFF.

This provides a logic high Output.

To get a logic low a transistor are changed from Q_1-OFF, Q_2-ON. (External pull up registers are used to drive the data in Port 0)

Port 1 (Quasi bidirectional port).

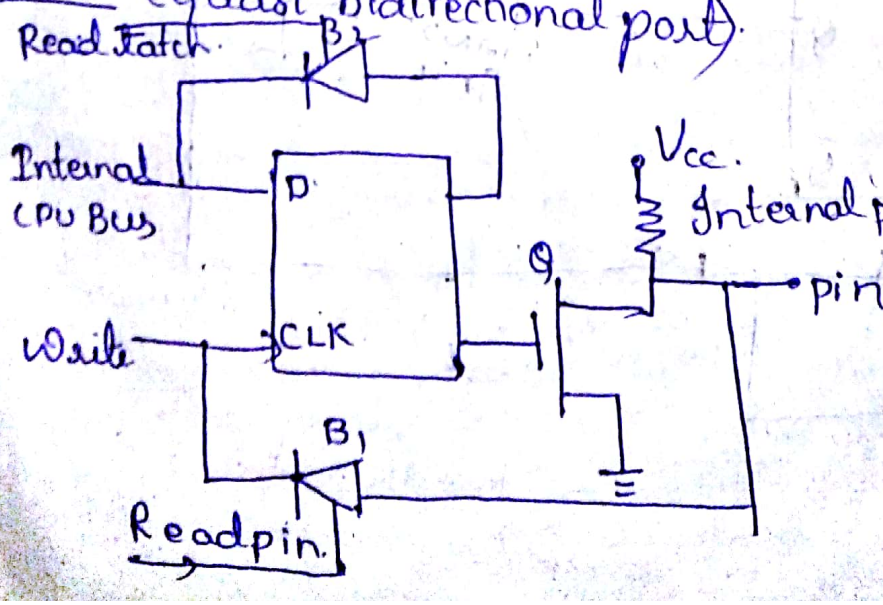

It is used to maintain stability

It acts as an isolator.

Scanned by CamScanner

I/O ports of 8051

Port 0 ⟷ true bidirectional.
Port 1 ⟷ quasi bidirectional / Simple bidirectional
Port 2 ⟷ } Simple bidirectional Simple I/O.
Port 3 ⟷ } Special function port

Port 2

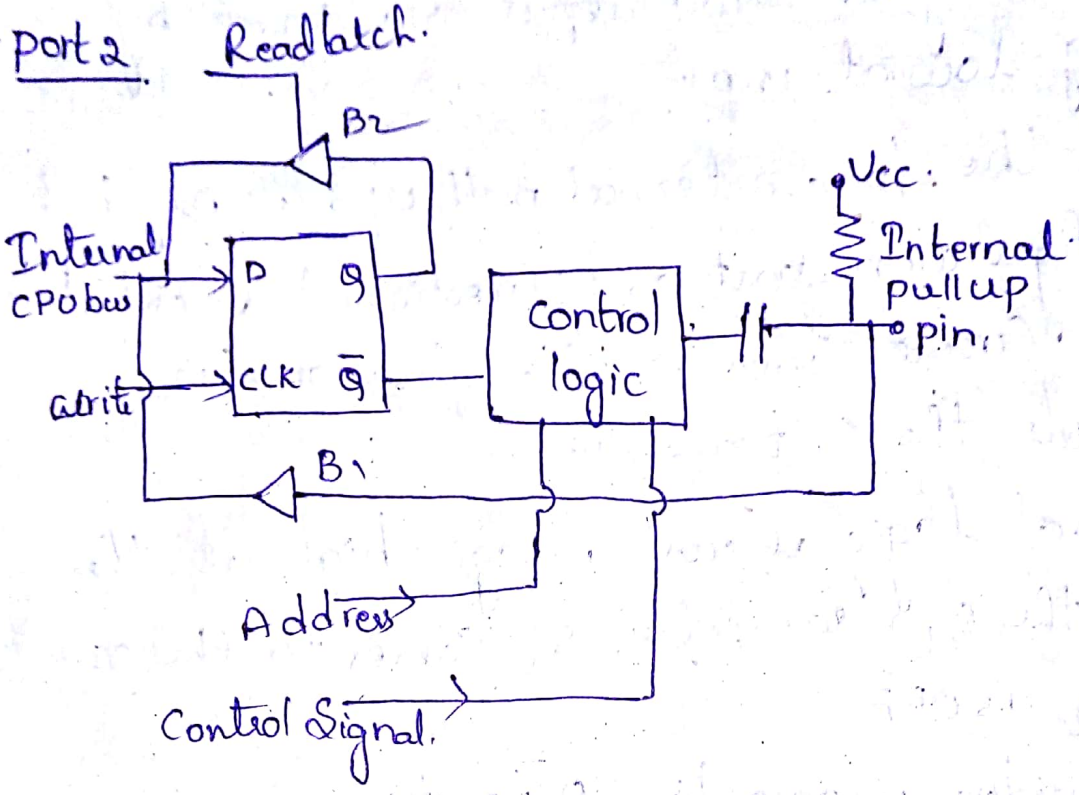

Port 3

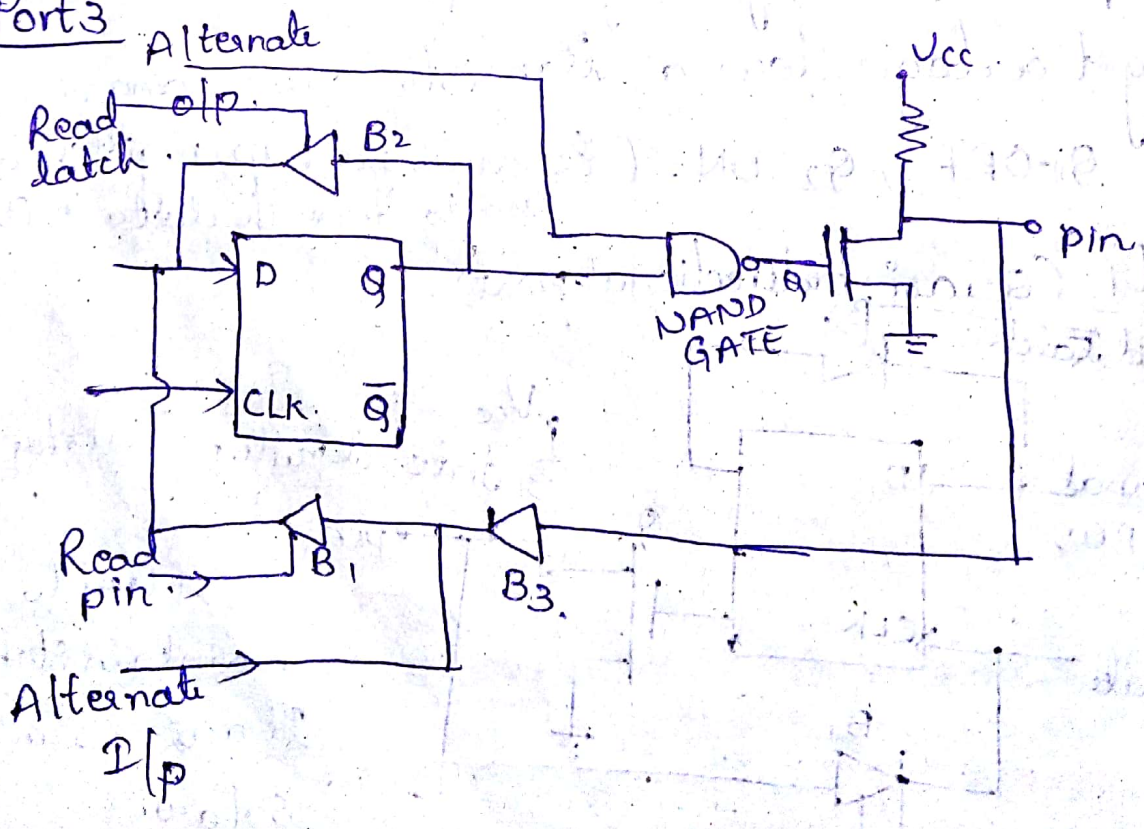

www.Jntufastupdates.com
Scanned by CamScanner

Timers and Counters

8051 ~~has~~ is used for multipurpose programming so the 8051 is require timers and counters

Timer:

Timer is used to set internal clock period to an operation

Counter:

Counter is used to set number of external counts given by the external clock

8051 has two 16 bit timers namely

1. Timer 0 — TL0 - 8 bit, TH0 - 8 bit
2. Timer 1 — TL_1 (8 bit), TH_1 (8 bit)

TCON, TMOD is a special register to control the Timer Operation.

Timer Controller

D7	D6	D5	D4	D3	D2	D1	D0
TF_1	TR_1	TF_0	TR_0	IE_1	IT_1	IE_0	IT_0

→ TCON is reserved for controlling timer bits and timer flags.

→ In the format Lower Nibble controls timer interrupts (level trigger and edge trigger interrupts of 0 and 1 timers.

→ D_0 - IT_0 - external interrupt 0 edge timer — If $D_0=1$ edge trigger; If $D_0=0$ level trigger

→ D_1 - IE_0 - external interrupt edge flag — $D_1=1$ flag detected; $D_1=0$ flag disabled.

→ D_2 - IT_1 - external interrupt 1 edge timer — If $D_0=1$ edge; If $D_0=0$ level.

→ D_3 - IE_1 - external interrupt edge flag — flag detected $D_3=1$; $D_3=0$ flag disabled.

www.Jntufastupdates.com Scanned by CamScanner

TMOD

D_7	D_6	D_5	D_4	D_3	D_2	D_1	D_0
Gate	$C/\bar{T}$	M_1	M_0	Gate	$C/\bar{T}$	M_1	M_0
← Timer1 →				← Timer0 →			

M_1	M_0	Mode	Description
0	0	0	Timer/counter (13-bit)
0	1	1	16-bit timer/counter
1	0	2	8-bit autoreload timer/counter
1	1	3	Two Seperate 8-bit Counter for timer-0. Timer1 Stops

TCON

D_4 – TR0 – Timer Run in. Timer0 Run.

If. $D_4 = 1$ Timer Run enable

$D_4 = 0$ Timer Run disable.

D_5 – TF0 – Timer 0. Over flow

If $D_5 = 1$ Timer Over flow enable

$D_5 = 0$ Time Over flow disable.

D_6 – TR_1 – Timer 1 Run

$D_6 = 1$ enable.

$D_6 = 0$ disable.

D_7 – TF_1 – Timer 1 over flow

$D_7 = 1$ enable.

$D_7 = 0$ disable.

www.Jntufastupdates.com Scanned by CamScanner

TMOD

M_0 and M_1 are mode Selection bits

$C/\overline{T}$ = Counter/Timer

$1/\overline{T} = 1/0$ = Counter (external Operation)

$0/\overline{0} = 0/1$ = Timer (for internal Operation)

Gate: It will acts as an interface gate. The gate will be Open when the Operation is done.

Modes of Timers

There are 4 modes in Timers and Counters

i.e) 1) mode 0 (13-bit)

2) mode 1 (16-bit)

3) mode 2 (8-bit autoreload)

4) mode 3 (Seperate 8-bit)

Mode 0:-

Mode 1:-

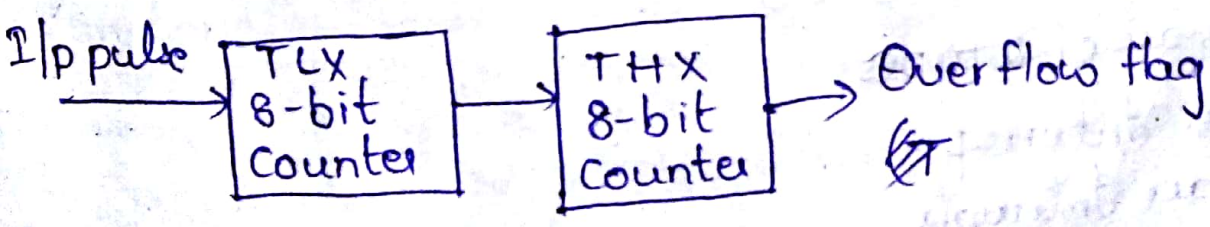

Mode 2 drawback = Overflow

www.Jntufastupdates.com Scanned by CamScanner

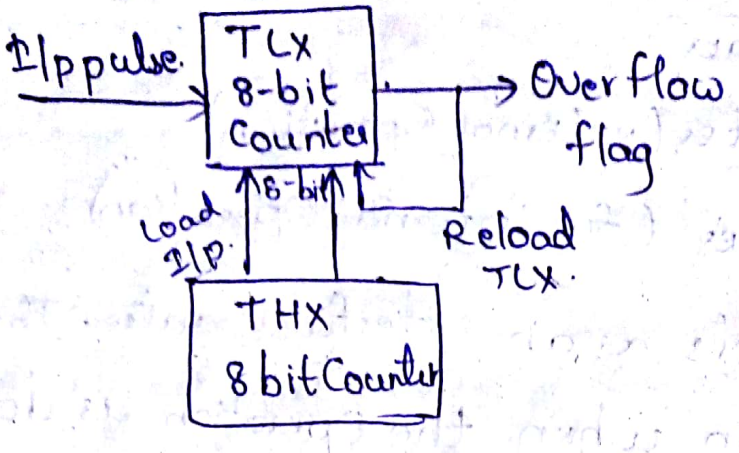

Mode-3

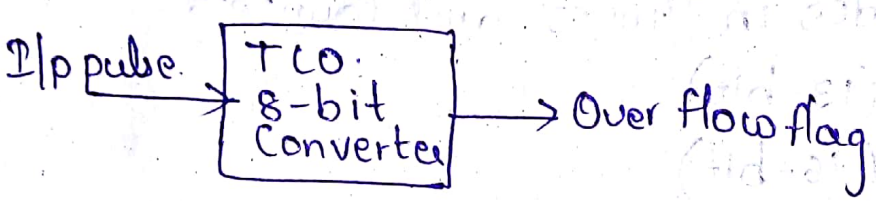

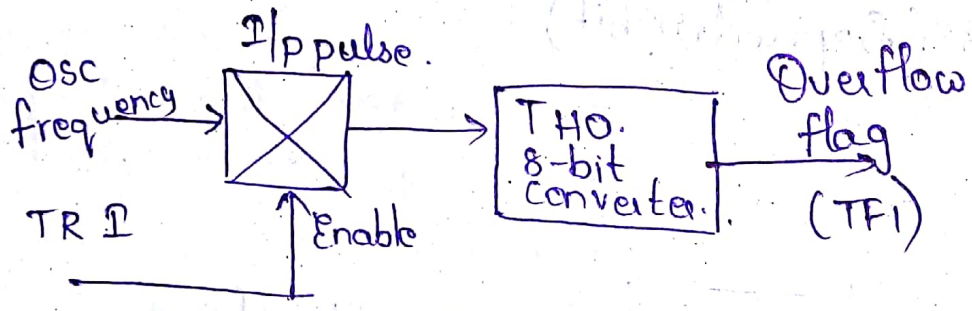

Interrupts of 8051

Interrupt is an event driven element used to execute a CPU tasks.

Interrupts are of 2 types.

1. Software Interrupts
2. Hardware Interrupts
   ↓
   1) INT0
   2) INT1

www.Jntufastupdates.com Scanned by CamScanner

There are actually 6 interrupts in 8051 (included reset)

1. RESET: It reintialises the entire program setup.
The It interlinked to the all the segments of Controller

2. Timer Interrupts:

There are 2 Timer interrupts

2. Timer-0
3. Timer-1

- There are 2 External interrupts

4. INT-0
5. INT-1

Serial port interrupt

8051 Supports Serial and parallel communication.
but in 8086 - Serial Communication
with the help of 8255 - parallel Communication

UART - Data transmission (At present)
Universal Asynchronous Reciever and Transmitter

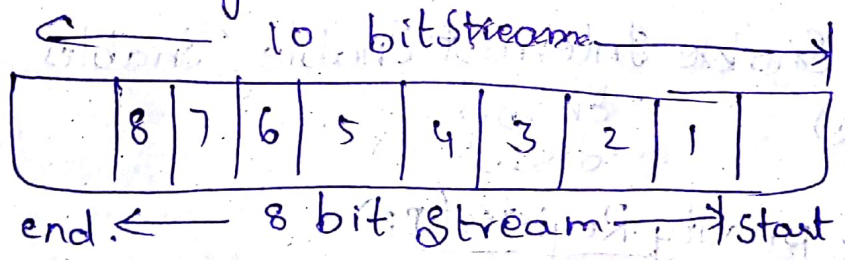

To enable or disable interrupts in 8051 a special functions registers of IE and IP is used

IE - Interrupt enable
IP - Interrupt priority.

www.Jntufastupdates.com Scanned by CamScanner

Interrupt Enable Register (IE)

D7	D6	D5	D4	D3	D2	D1	D0
EA	–	ET2	ES	ET1	EX1	ET0	EX0

D0 - EX0 - Enable external Interrupt 0
1 - enable
0 - disable

D1 - ET0 - External Interrupt Timer 0 Over flow.
1 - Over flow enable
0 - Over flow disable.

D2 - EX1 - External Interrupt 1
1 - enable
0 - disable.

D3 - ET1 - External Interrupt Timer 1 Over flow
1 - Overflow enable
0 - disable.

D4 - ES - External Serial port

D5 - ET2 - External Timer-2 Over flow
This is not used in 8051. This is for futur purpose.

D6 - Don't Care.

D7 - EA - Enable Interrupt Enable. (Enables all the interrupts)
1 - Enable.
0 - disable.

Interrupt priority Register (IP)

D7	D6	D5	D4	D3	D2	D1	D0
–	–	PT2	PS	PT1	PX1	PT0	PX0

D0 - PX0 - Priority External Interrupt 0.
1 - enable
0 - disable.

PT0 - Priority Timer 0 Over flow
1 - Over flow enable
0 - disable

www.Jntufastupdates.com Scanned by CamScanner

PX1 = Priority External Interrupt 1
1-enable
0-disable.

PT_1 - Priority Timer1 Overflow.
1-enable
0-disable.

PS - Priority Serial port

PT_2 - Priority External Timer2 Overflow
Not used in 8051.

Serial Communication of 8051

For Serial Communication of 8051 Supports 3 Special function registers
1) SBUF 2) SCON 3) PCON.

SBUF (Serial buffer)
It is a simple 8 bit register used to transmitter and recieve data. It acts as an Accumulator.

SCON :- (Serial controller)

D7	D6	D5	D4	D3	D2	D1	D0
SM0	SM1	SM2	REN	TB8	RB8	TI	RI

D0 - RI - Reciever.
D1 - TI - Transmitter

D0 - 1 - Reciever mode enable.
0 - disable
D1 - 1 - Transmitter enable
0 - disable.
RB-8 - Reciever bit 8
TB8 - Transmitter bit 8

www.Jntufastupdates.com Scanned by CamScanner

D_4 - REN - Return.

D_5 - SM_2 - Serial Mode 2 (MultiControllers on a same board)

SM_1 - Serial Mode 1

SM_0 - Serial Mode 0.

SM_1	SM_0	Mode	Description
0	0	- Serial Mode 0	shift operation.
0	1	- Mode 1	8-bit UART
1	0	- Mode 2	9-bit UART
1	1	- Mode 3	9-bit UART with programmable baudrate (speed of data transmission)

PCON. (Power Controller)

D_7	D_6	D_5	D_4	D_3	D_2	D_1	D_0
SMOD	X	X	X	GF1	GF0	PD	IDL

D_0 - IDL - Ideal - 1

Running - 0

D_1 - PD - Power down mode -

This bit is Set 8051 enter to power down.

Otherwise it is Set to 0

D_2 - GF0 - General purpose flag 0 } (User purpose).

D_3 - GF1 - General purpose flag 1 }

D_5, D_4, D_6 (Undefined)

D_7 - Serial mode (SMOD) D_7 - 1

D_7 - 0 - parallel mode

www.Jntufastupdates.com Scanned by CamScanner