$$\frac{1}{2\cancel{4\pi} k \cancel{r_2^2}} = \frac{1}{\cancel{2\pi} h_0 r_2^{\cancel{3}}}$$

Unit - II

$$\frac{1}{2K} = \frac{1}{h_0 r_2}$$

$$\Rightarrow \boxed{r_2 = \frac{2K}{h_0}}$$

Rectangular fin

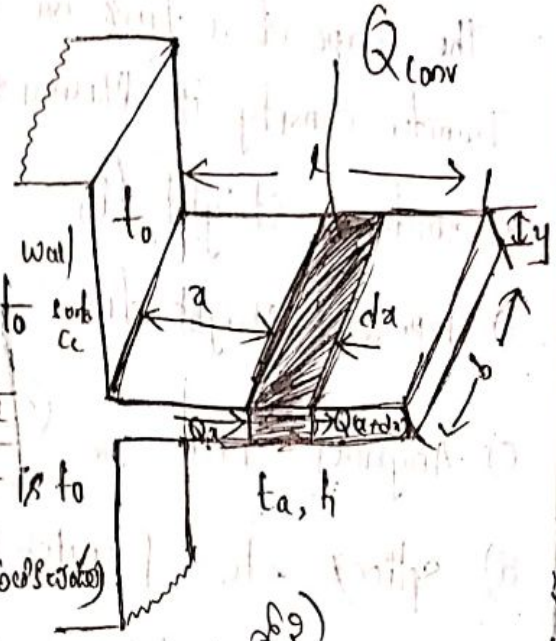

Extended Surfaces (or) fins

the fin is a devise used to enhance the heat transfer rate of extending surface whose heat is to be removed or fins are apendages (ఉపాంగాలు) to primary heat transfer surfaces.

→ Whenever the available surface is inadequate, to Transfer the required quantity of heat with the available Temp drop and heat transfer coefficient, extended surfaces or fins are used.

uses :-

→ Economizer in steam power plants
→ Radiators of automobiles
→ Condenser coils or cooling coils in refrigerators & A.C
→ Electric motor bodies
→ Air cooled engine cylinder heads
→ Small compressors.

Scanned by CamScanner

Principle :-

→ the fins are extended surfaces which are used to increase the heat transfer rate for a given 'k'

→ the shape of a fins are optimized such that heat Transfer density is Maximized.

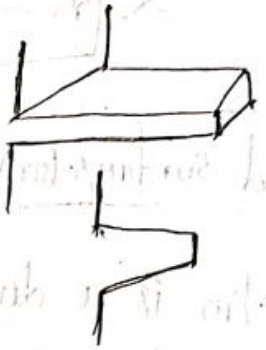

a) uniform stright fin

b) Tapered stright fin

c) Angular fin.

d) splines etc. (clutch plate internal parts are called splines)

→ For the Proper design of fin the Temp distribution knowledge is necessary.

the following assumptions should be made for the analysis of heat flow through the fin.

i) steady state ~~condition~~ conduction

ii) no internal heat generation

iii) uniform heat transfer coefficient over the Surface [h]

iv) homogeneous and isotropic material [k = constant]

v) one dimensional heat conduction

vi) neglisible radiation

vii) neglisible ~~contact~~ Contact thermal resistence.

www.Jntufastupdates.com Scanned by CamScanner

Heat flow Through Rectangular fin :-

Consider a rectangular Surface protruding on a Wall Surface

l - length of a fin [$\perp$ lar to the Surface in which heat is to be removed]

b - Width of a fin [$\parallel$ to The Surface Wall in which heat is removed]

y - Thickness of fin

Area of cross section $A_{cs} = b \times y$

perimeter of fin $2(b+y) = P$

t_0 - Temp at base of fin

t_a - ambient Temp

h - heat Transfer coefficient [Convective]

K - Thermal Conductivity

to determine the governing differential equation for the heat transfer rate across the fin is given as follows

→ Consider Heat flow across an element of thickness 'dx' at distance 'x' from a base

Heat flow into an element at a plane 'x' by Conduction

$$Q_x = -K \cdot A_{cs} \left[\frac{dt}{dx}\right]_x \longrightarrow (i)$$

Heat flow out of an element at a plane dx by Conduction

$$Q_{(x+dx)} = -K \cdot A_{cs} \left[\frac{dt}{dx}\right]_{x+dx} \longrightarrow (ii)$$

www.Jntufastupdates.com Scanned by CamScanner

Heat convected out of an element b/w two planes x and dx

$$Q_{conve} = h\cdot[P\cdot dx][t - t_a] \longrightarrow \text{(iii)}$$

Energey balance equation

Heat in-flow = Heat out-flow

$$Q_x = Q_{(x+dx)} + Q_{conve}$$

$$-K\cdot A_{cs}\left[\frac{dt}{dx}\right]_x = -K\cdot A_{cs}\cdot\left[\frac{dt}{dx}\right]_{x+dx} + h[p\,dx]\cdot[t - t_a]$$

using Taylor's series of expansion

$$\left[\frac{dt}{dx}\right]_{x+dx} = \left[\frac{dt}{dx}\right]_x + \frac{d}{dx}\left(\frac{dt}{dx}\right)_x \frac{dx}{1!} + \frac{d^2}{dx^2}\left(\frac{dt}{dx}\right)_x \cdot \frac{dx^2}{2!} + \cdots$$

$$-K\cdot A_{cs}\left[\frac{dt}{dx}\right]_x = -K\cdot A_{cs}\left[\left[\frac{dt}{dx}\right]_x + \frac{d}{dx}\left(\frac{dt}{dx}\right)_x \cdot \frac{dx}{1!} + \frac{d^2}{dx^2}\left(\frac{dt}{dx}\right)_x \frac{dx^2}{2!} + \cdots\right]$$

$$+ h[p\,dx]\cdot[t - t_a]$$

neglecting higher terms as $dx \to 0$

$$-K\,A_{cs}\cancel{\left[\frac{dt}{dx}\right]_x} = -K\,A_{cs}\cancel{\left(\frac{dt}{dx}\right)_x} - \frac{d^2t}{dx^2}\,dx\cdot K\cdot A_{cs} + h\cdot p\,dx\,(t - t_a)$$

$$K\cdot A_{cs}\left[\frac{d^2t}{dx^2}\right]dx - h\,p\,dx\,(t - t_a) = 0$$

dividing with $A_{cs}\cdot dx$

$$K\cdot\frac{d^2t}{dx^2} - \frac{h\,p}{A_{cs}}(t - t_a) = 0$$

$$\boxed{\frac{d^2t}{dx^2} - \frac{h\cdot P}{K\cdot A_{cs}}(t - t_a) = 0} \longrightarrow \text{(iv)}$$

www.Jntufastupdates.com Scanned by CamScanner

eqn (iv) is

* Further simplified as by transforming dependent variable by defining excess Temp θ

$$\theta(x) = t_x - t_a \quad \text{diff. w.r.to } x$$

$$\frac{d\theta}{dx} = \frac{dt}{dx} \quad \text{Again diff.}$$

$$\frac{d^2\theta}{dx^2} = \frac{d^2t}{dx^2}$$

$$\boxed{\frac{d^2\theta}{dx^2} - m^2\theta = 0} \longrightarrow \text{(v)}$$

eqn (iii) and (iv) general form of Energy eqn for 1-D heat dispation from a fin

parameter m is constant provided convective heat Transfer coefficient is constant, is constant for a given Temp

the general solution for linear second order differential eqn is given as

$$\theta = c_1 e^{mx} + c_2 e^{-mx} \longrightarrow \text{(vi)}$$

Where c_1, c_2 are constants which are to be maintained for a given boundary condition

At $x=0$; $\theta = \theta_0$

$$\theta_0 = t_0 - t_a$$

Boundary conditions are applied based on the situation of fin.

Scanned by CamScanner

→ the fin is infinitely long and Temp at the end of fin is equal to surrounding Temp

→ The fin is insulated at end

→ The fin is finite length and loses heat by Convection

(i). the fin is infinitely long and Temp at end of fin is equal to surrounding Temp

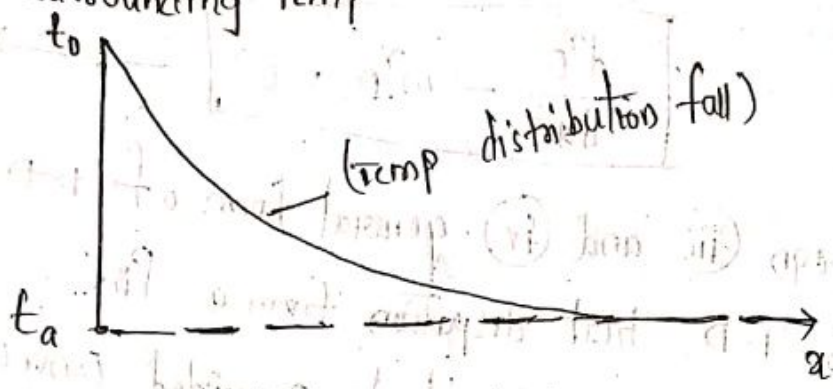

at $x=0$; $\theta=\theta_0 \Rightarrow t_0-t_a$

at $x=\infty$; $\theta=0$

$$\theta = c_1 e^{mx} + c_2 e^{-mx}$$

$$\theta_0 = c_1 + c_2$$

$$\theta = c_1 e^{mx} + c_2 e^{-mx}$$

$$c_1 e^{m(\infty)} + c_2 e^{-m(\infty)} = 0$$

$$c_1 e^{m\infty} + c_2 e^{-\infty} = 0$$

$$c_1 e^{m\infty} + 0 = 0$$

$$c_1 = 0$$

$$\theta_0 = 0 + c_2$$

$$(c_2 = \theta_0)$$

$$\theta = \theta_0 e^{-mx}$$

$$(t-t_a) = (t_0-t_a)\, e^{-mx}$$

$$\boxed{\frac{t-t_a}{t_0-t_a} = e^{-mx}}$$

$$(t-t_a) = (t_0-t_a)\, e^{-mx}$$

Scanned by CamScanner

the dependence of dimensionless Temp along the length of fin for different values of parameter 'm'

According to graphical presentation

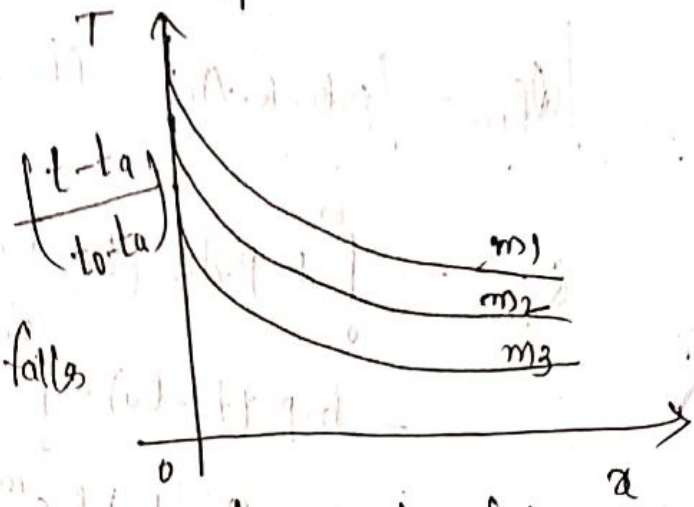

i) As the value of 'm' increases $\left(\frac{t-t_a}{t_0-t_a}\right)$ is falls

As the length of fin increased to ∞ then $\frac{t-t_a}{t_0-t_a}=0$.

to determine heat flow rate through a infinite length of fin, there are two ways

(a) By considering heat flow across the base of fin by conduction

(b) By considering heat which is transmitted from the fin to surrounding fluid

a Heat flow rate through a fin by fourier equation

$$Q_{fin} = -K A_{cs} \left(\frac{dt}{dx}\right)_{x=0}$$

$$\frac{dt}{dx} = \frac{d}{dx}\left[(t_0-t_a)e^{-mx}\right]_{x=0}$$

$$= \left[-m(t_0-t_a)e^{-mx}\right]_{x=0}$$

$$\left[\frac{dt}{dx}\right]_{x=0} = -m(t_0-t_a)$$

$$Q_{fin} = -K \cdot A_{cs}\left[-m(t_0-t_a)\right]$$

$$= K \cdot A_{cs}\, m\,(t_0-t_a)$$

Scanned by CamScanner

$$= K \cdot A_{cs} \cdot \sqrt{\frac{ph}{K \cdot A_{cs}}}\,[t_0 - t_a]$$

$$\boxed{Q_{fin} = \sqrt{p \cdot h \cdot K \cdot A_{cs}} \cdot (t_0 - t_a)}$$

$Q_{fin} = K \times A_{sur} \times \Delta t$

$$Q_{fin} = \int_0^\infty h \cdot p \cdot dx \cdot [t_0 - t_a]\, e^{-mx}$$

$$= h \cdot p\,(t_0 - t_a) \cdot \int_0^\infty e^{-mx}\,dx$$

$$= h \cdot p\,(t_0 - t_a) \left[\frac{e^{-mx}}{-m}\right]_0^\infty$$

$$= h \cdot p\,(t_0 - t_a) \cdot \left[-\left(\frac{-1}{m}\right)\right]$$

$$= h \cdot p\,(t_0 - t_a)\,\frac{1}{m}$$

$$= h\,p\,(t_0 - t_a) \cdot \sqrt{\frac{K \cdot A_{cs}}{h\,p}}$$

$$\boxed{Q_{fin} = \sqrt{p\,h\,K \cdot A_{cs}} \cdot (t_0 - t_a)}$$

From the eqn $\frac{t - t_a}{t_0 - t_a} = e^{-mx}$, it is evidente that the Temp falls towards the tip of the plate. Thus the area near the fin tip is not utilized to the extend as the lateral area near the base.

(2) Fin tip is insulated.

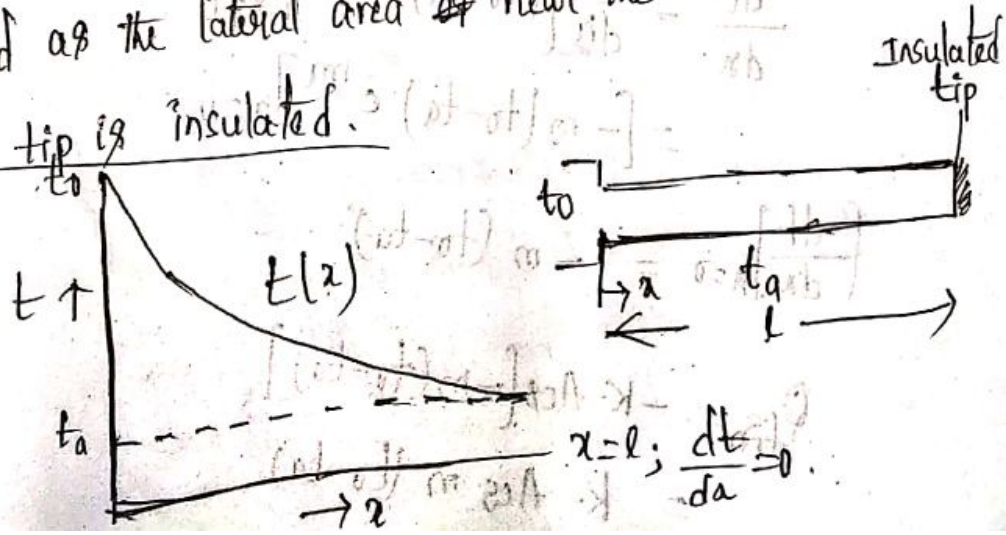

Scanned by CamScanner

fig shows fin of finite length which is insulated at tip

l - length of a fin

Apply boundary conditions

$$x=0 \; ; \; \theta = \theta_0$$

$$x=l \; ; \; \frac{dt}{dx} = 0$$

$$\theta = c_1 e^{mx} + c_2 e^{-mx} \longrightarrow (i) \qquad (\theta = t - t_a)$$

$$\theta_0 = c_1 + c_2$$

where c_1, c_2 are the constants w.r.to excess Temp θ

From eqn (i)

$$t - t_a = c_1 e^{mx} + c_2 e^{-mx}$$

$$\frac{dt}{dx} = c_1 m e^{mx} - c_2 m e^{-mx}$$

$$\left[\frac{dt}{dx}\right]_{x=L} = m\left[c_1 e^{ml} - c_2 e^{-ml}\right]$$

$\theta_0 = c_1 + c_2$

$c_2 = \theta_0 - c_1$

$$m\left[c_1 e^{ml} - c_2 e^{-ml}\right] = 0$$

$$c_1 e^{ml} - c_2 e^{-ml} = 0$$

$$c_1 e^{ml} - (\theta_0 - c_1) e^{-ml} = 0$$

$$c_1 e^{ml} - \theta_0 e^{-ml} + c_1 e^{-ml} = 0$$

$$c_1 e^{ml} + c_1 e^{-ml} = \theta_0 e^{-ml}$$

$$\left[e^{ml} + e^{-ml}\right] c_1 = \theta_0 e^{-ml}$$

$$c_1 = \theta_0 \left[\frac{e^{-ml}}{e^{ml} + e^{-ml}}\right]$$

www.Jntufastupdates.com Scanned by CamScanner

$$\theta_0 = \theta_0 \left[\frac{e^{-ml}}{e^{ml}+e^{-ml}}\right] + c_2$$

$$c_2 = \theta_0 - \theta_0 \left[\frac{e^{-ml}}{e^{ml}+e^{-ml}}\right]$$

$$c_2 = \theta_0 \left[1 - \frac{e^{-ml}}{e^{ml}-e^{-ml}}\right]$$

$$c_2 \Rightarrow \theta_0 \left[\frac{e^{ml}}{e^{ml}+e^{-ml}}\right]$$

Sub c_1, c_2 in eq (1)

$$\theta_0 = \theta_0 \left[\frac{e^{-ml} \cdot e^{mx}}{e^{ml}+e^{-ml}}\right] + \theta_0 \left[\frac{e^{ml} e^{-mx}}{e^{ml}+e^{-ml}}\right]$$

$$\theta = \theta_0 \left[\frac{e^{m(x-l)} + e^{m(l-x)}}{e^{ml} + e^{-ml}}\right]$$

$$\frac{\theta}{\theta_0} = \frac{e^{m(l-x)} + e^{-m(l-x)}}{e^{ml}+e^{-ml}} \qquad \left[\frac{e^{x}+e^{-x}}{2} = \cosh x\right]$$

$$\frac{\theta}{\theta_0} = \frac{\cosh m(l-x)}{\cosh(ml)}$$

$$\frac{t-t_a}{t_0-t_a} = \frac{\cosh[m(l-x)]}{\cosh(ml)}$$

This expression represents Temp distribution which is dimensionless number.

www.Jntufastupdates.com Scanned by CamScanner

Rate of heat flow Through fin $Q_{fin} = -K \cdot A_{cs} \cdot \left[\frac{dt}{dx}\right]_{x=0}$

$$\frac{dt}{dx} \quad t - t_a = t_0 - t_a \cdot \frac{\cosh[m(l-x)]}{\cosh(ml)}$$

$$\frac{dt}{dx} = (t_0 - t_a) \frac{\sinh[m(l-x)]\,(-m)}{\cosh(ml)}$$

$$= [t_0 - t_a] - \frac{\sin[m(l-x)]}{\cosh[ml]}$$

$$\left[\frac{dt}{dx}\right]_{x=0} = (t_0 - t_a)[-m] \frac{\sinh[ml]}{\cosh(ml)}$$

$$\left[\frac{dt}{dx}\right]_{x=0} = -m[t_0 - t_a] \tanh[ml]$$

Sub in eq (ii)

$$Q_{fin} = -K \cdot A_{cs}\left[-m[t_0 - t_a] \tanh[ml]\right]$$

$$= K \cdot A_{cs}\, m\, [t_0 - t_a] \tanh[ml]$$

$$= K \cdot A_{cs} \sqrt{\frac{ph}{K \cdot A_{cs}}}\, [t_0 - t_a] \tanh[ml]$$

$$\boxed{Q_{fin} = \sqrt{phKA_{cs}}\, [t_0 - t_a] \tanh[ml]}$$

(3) Heat flow rate through fin of finite length & losing heat by Conducting

Fig shows fin of finite length losing heat at the tip

Apply Boundary Condition $x = 0$; $\theta = \theta_0$

Scanned by CamScanner

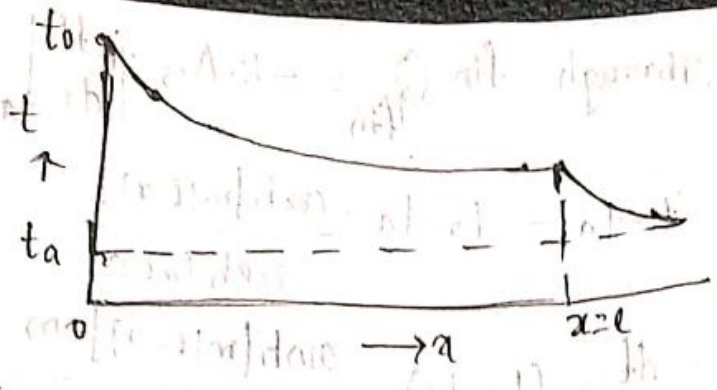

Heat conduction to fin at $x=l$ is equal to heat conducted from the fin to surroundings

$$-k\,A_{cs}\cdot\left[\frac{dt}{dx}\right]_{x=l} = h\cdot A_{sur}\,(t-t_a)$$

Where A_{cs} – Crossection area of heat conduction

A_{sur} – Surface area from which heat conduction take place

but at the tip $A_{cs} = A_{sur}$

$$-k\left[\frac{dt}{dx}\right]_{x=l} = h\theta$$

$$\left[\frac{dt}{dx}\right]_{x=l} = \frac{-h\theta}{k}$$

Apply 1st boundary condition

$$c_1 + c_2 = \theta_0$$

$$\theta = c_1 e^{mx} + c_2 e^{-mx}$$

$$t - t_a = c_1 e^{mx} + c_2 e^{-mx}$$

$$\frac{dt}{dx} = m c_1 e^{mx} - m c_2 e^{-mx}$$

Scanned by CamScanner

$$\left[\frac{dt}{dx}\right] = m\left[c_1 e^{mx} - c_2 e^{-mx}\right]$$

$$\left[\frac{dt}{dx}\right]_{x=l} = m\left[c_1 e^{ml} - c_2 e^{-ml}\right]$$

$$\frac{-h\theta}{k} = m\left(c_1 e^{ml} - c_2 e^{-ml}\right]$$

$$\frac{-h\theta}{k.m} = c_1 e^{ml} - c_2 e^{-ml}$$

$$\frac{-h}{k.m}\left[c_1 e^{ml} + c_2 e^{-ml}\right] = c_1 e^{ml} - c_2 e^{-ml}$$

$$\left[\because \theta_{x=l} = c_1 e^{mx} + c_2 e^{-mx}\right]$$

$$\frac{-h}{km}\left[c_1 e^{ml} + (\theta_0 - c_1)\, e^{-ml}\right] = \left[c_1 e^{ml} - (\theta_0 - c_1)\, e^{-ml}\right]$$

$$\frac{-h}{km}\left[c_1 e^{ml} + \theta_0 e^{-ml} - c_1 e^{-ml}\right] = c_1 e^{ml} - \theta_0 e^{-ml} + c_1 e^{-ml}$$

$$c_1\left[\frac{-h}{km} e^{ml} + \frac{h}{km} e^{-ml} - e^{ml} - e^{-ml}\right] = \theta_0\left[\frac{h}{km} e^{-ml} - e^{-ml}\right]$$

$$c_1 = \frac{\theta_0\left[e^{-ml}\left[\frac{h}{km} - 1\right]\right]}{\left[\frac{h}{km}\left[e^{-ml} - e^{ml}\right] - \left[e^{ml} + e^{-ml}\right]\right]}$$

$$c_1 + c_2 = \theta_0$$

$$c_2 = \theta_0 - c_1$$

$$= \theta_0 - \theta_0\left[\frac{e^{-ml}\left[\frac{h}{km} - 1\right]}{\frac{h}{km}\left[e^{-ml} - e^{ml}\right] - \left[e^{-ml} + e^{-ml}\right]}\right]$$

$$c_2 = \theta_0\left[\frac{\frac{h}{km}\left(e^{-ml} - e^{ml}\right) - \left(e^{ml} + \cancel{e^{-ml}}\right) - \cancel{e^{-ml}\left(\frac{h}{km} - 1\right)}}{\frac{h}{km}\left[e^{-ml} - e^{ml}\right] - \left[e^{ml} + e^{-ml}\right]}\right]$$

Scanned by CamScanner

$$c_2 = \theta_0 \left[\frac{\cancel{-}\left[e^{ml} + \frac{h}{km} e^{ml}\right]}{\cancel{-}\left[\frac{h}{km}\left(e^{ml} - e^{-ml}\right) + \left(e^{ml} + e^{-ml}\right)\right]} \right]$$

$$c_2 = \theta_0 \left[\frac{e^{ml} \cdot \left[1 + \frac{h}{km}\right]}{\frac{h}{km}\left(e^{ml} - e^{-ml}\right) + \left(e^{ml} + e^{-ml}\right)} \right]$$

$$\theta = c_1 e^{mx} + c_2 e^{-mx}$$

$$\theta = \theta_0 \left[\frac{-e^{-ml}\left(1 - \frac{h}{km}\right) e^{mx} + \left(e^{ml}\left(1 + \frac{h}{km}\right) \cdot e^{-mx}\right)}{-\frac{h}{km}\left(e^{ml} - e^{-ml}\right) + \left(e^{ml} + e^{-ml}\right)} \right]$$

$$\frac{e^{x} - e^{-x}}{2} = \sinh x$$

$$\theta = \theta_0 \left[\frac{e^{m(x-l)}\left[1 - \frac{h}{km}\right] + e^{m(l-x)}\left(1 + \frac{h}{km}\right)}{\frac{h}{km}\left(e^{ml} - e^{-ml}\right) + \left[e^{ml} + e^{-ml}\right]} \right]$$

$$\frac{e^{x} + e^{-x}}{2} = \cosh x$$

$$\theta = \theta_0 \left[\frac{\mp e^{m(l-x)} - e^{-m(l-x)} \cdot \frac{h}{km} + e^{m(l-x)} + e^{m(l-x)} \cdot \frac{h}{km}}{\frac{h}{km}\left[e^{ml} - e^{-ml}\right] + \left(e^{ml} + e^{-ml}\right)} \right]$$

$$\theta = \theta_0 \left[\frac{\left(\frac{e^{m(l-x)} + e^{-m(l-x)}}{2}\right) + \frac{h}{km}\left(\frac{e^{m(l-x)} - e^{-m(l-x)}}{2}\right)}{\frac{h}{km}\left[\frac{e^{ml} - e^{-ml}}{2}\right] + \left(\frac{e^{ml} + e^{-ml}}{2}\right)} \right]$$

$$= \theta_0 \left[\frac{\cosh m(l-x) + \frac{h}{km} \sinh(m(l-x))}{\frac{h}{km} \sinh(ml) + \cosh(ml)} \right]$$

$$\frac{t - t_a}{t_0 - t_a} = \frac{\theta}{\theta_0} = \left[\frac{\cosh[m(l-x)] + \frac{h}{km} \sinh[m(l-x)]}{\frac{h}{km} \sinh(ml) + \cosh(ml)} \right]$$

Scanned by CamScanner

$$Q_{fin} = -k \cdot A_{cs} \cdot \left[\frac{dt}{dx}\right]_{x=0}$$

$$(t-t_a) = (t_0-t_a) \cdot \left[\frac{\cosh[m(l-x)] + \frac{h}{km}\sinh[m(l-x)]}{\frac{h}{km}\sinh(ml) + \cosh(ml)}\right]$$

$$\frac{dt}{dx} = (t_0-t_a)\left[\frac{-m\sinh[m(l-x)] + \frac{h}{km}(-m)\cosh[m(l-x)]}{\frac{h}{km}\sinh(ml) + \cosh(ml)}\right]$$

$$\left[\frac{dt}{dx}\right]_{x=0} = \frac{-(t_0-t_a)\, m \sinh[ml] - \frac{h}{k}\cosh[ml]}{\frac{h}{km}\sinh(ml) + \cosh[ml]}$$

$$Q_{fin} = +k A_{cs}\, m(t_0-t_a) \cdot \left[\frac{\sinh[ml] + \frac{h}{km}\cosh[ml]}{\frac{h}{km}\sinh(ml) + \cosh[ml]}\right]$$

$$= k \cdot A_{cs} \cdot m\,(t_0-t_a)\left[\frac{\frac{h}{km} + \tanh[ml]}{\frac{h}{km}\tanh[ml] + 1}\right]$$

$$= k \cdot A_{cs}\sqrt{\frac{p \cdot h}{k \cdot A_{cs}}}\,(t_0-t_a)\left[\frac{\frac{h}{km} + \tanh[ml]}{\frac{h}{km}\tanh(ml) + 1}\right]$$

$$\boxed{Q_{fin} = \sqrt{k \cdot A_{cs} \cdot ph}\,(t_0-t_a)\left[\frac{\frac{h}{km} + \tanh[ml]}{\frac{h}{km}\tanh[ml] + 1}\right]}$$

Scanned by CamScanner

Efficiency and Effectiveness of fin:-

Efficiency:-

It is defined as ratio of actual heat transfered by fin to the Maximum heat transferable by fin, if entire fin area were at base Temp

$$\eta_{fin} = \frac{Q_{fin}}{Q_{max}}$$

→ If fin is ∞ Temp

$$\eta_{fin} = \frac{\sqrt{phK \cdot A_{cs}}\,\cancel{(t_0 - t_a)}}{h \cdot p \cdot l \cdot \cancel{(t_0 - t_a)}} \Rightarrow \sqrt{\frac{K \cdot A_{cs}}{p \cdot h}}\,\frac{1}{l}$$

$$\eta_{fin} = \frac{1}{ml}$$

→ If fin is insulated at tip

$$\eta_{fin} = \frac{\sqrt{phK \cdot A_{cs}}\,\cancel{(t_0 - t_a)}\,\tanh(ml)}{h \cdot p \cdot l\,\cancel{(t_0 - t_a)}}$$

$$= \frac{\tanh(ml)}{ml}$$

$$ml = \sqrt{\frac{ph}{K \cdot A_{cs}}} \cdot l \Rightarrow \sqrt{\frac{h(2b+2y)}{K \cdot b \cdot y}}\,l$$

$$ml = \sqrt{\frac{h(2b+2y)}{K \cdot b \cdot y}} \cdot l$$

www.Jntufastupdates.com Scanned by CamScanner

if the fin is sufficiently wide then the term '2b' will be greater than 2y [2b > 2y]

$$= \sqrt{\frac{h\,(2b)}{k \cdot b \cdot y}} \cdot l$$

$$= \sqrt{\frac{2h}{ky}}\; l$$

$$= \sqrt{\frac{2hl}{kyl}} \cdot l \Rightarrow \sqrt{\frac{2h}{kyl}}\; l^{3/2}$$

[profile area of fin] where $y \cdot L = A_p$

$$\boxed{m\,l = \sqrt{\frac{2h}{A_p \cdot k}}\; l^{3/2}}$$

to determine the efficiency of a real rectangular fin the length 'l' is replaced by a corrected length l_c which is given by

$$l_c = l + \frac{y}{2}$$

$$\eta_{fin} = \frac{\tanh\left[\sqrt{2h/ky}\cdot\left(l+\frac{y}{2}\right)\right]}{\sqrt{2h/ky}\;\left[l + y/2\right]}$$

this corrected length compensates that convective heat transfer takes place from the tip of a fin

Heat flow through insulated tip is given by

$$\boxed{Q_{fin} = \sqrt{P\,h\,k\,A_{cs}}\;(t_0 - t_a)\,\tanh\left[\sqrt{\frac{2h}{ky}}\left(l+\frac{y}{2}\right)\right]}$$

www.Jntufastupdates.com Scanned by CamScanner

$$\text{Efficiency} = \frac{\sqrt{phK \cdot A_{cs}}\,(t_0 - t_a)\,\tanh\left[\sqrt{\frac{2h}{ky}}\,(L + y/2)\right]}{Q_{max}}$$

$$Q = \sqrt{ph \cdot k \cdot A_{cs}}\,(t_0 - t_a) \cdot \eta_{fin} \tanh\left[\sqrt{\frac{2h}{ky}}\,(l_c)\right]$$

Effectiveness:-

Effectiveness of fin is defined as ratio of fin heat transfer rate to the that would exist without fin

$$\text{Effectiveness} = \frac{Q_{fin}}{Q_{without\ fin}}$$

$$\text{conduction} = \frac{\sqrt{p \cdot h \cdot k \cdot A_{cs}}\,\cancel{(t_0 - t_a)}}{k \cdot A_{cs}\,\cancel{(t_0 - t_a)}} = \sqrt{\frac{p \cdot h}{k \cdot A_{cs}}}$$

$$\text{convection} = \sqrt{\frac{pk}{h \cdot A_{cs}}} = \sqrt{\frac{(2b + 2y)k}{h \cdot b \cdot y}} = \sqrt{\frac{2\cancel{b} \cdot k}{h \cdot \cancel{b} \cdot y}} = \sqrt{\frac{2k}{hy}}$$

Relation b/w efficiency of fin & effectiveness of a fin:-

$$\eta_{fin} = \frac{\sqrt{p \cdot h \cdot k \cdot y}\,(t_0 - t_a)\,\tanh\sqrt{\frac{2h}{ky}}\,[l + y/2]}{h \cdot p \cdot l\,(t_0 - t_a)}$$

$$E_{fin} = \frac{\sqrt{p \cdot h \cdot k \cdot y}\,(t_0 - t_a)\,\tanh\sqrt{2h/ky}\,(l + y/2)}{h \cdot A_{cs} \cdot (t_0 - t_a)}$$

$$\cancel{\frac{\sqrt{p \cdot h \cdot k \cdot y}\,(t_0 - t_a)\,\tanh \cdot \sqrt{\frac{2h}{ky}}\,(l + y/2)}{h \cdot A_{cs} \cdot (t_0 - t_a)}}$$

Scanned by CamScanner

$$\frac{E_{fin}}{\eta_{fin}} = \frac{\dfrac{\sqrt{phkg}\,(t_0-t_a)\tanh\sqrt{\frac{2h}{kg}}\,(l+y/2)}{h\cdot A_{cs}\cdot(t_0-t_a)}}{\dfrac{\sqrt{phkg}\,(t_0-t_a)\tanh\left[\sqrt{\frac{2h}{kg}}\,(l+y/2)\right]}{h\cdot p\cdot l\,(t_0-t_a)}}$$

$$\Rightarrow \frac{\cancel{h}\,p\,l\,\cancel{(t_0-t_a)}}{\cancel{h}\cdot A_{cs}\,\cancel{(t_0-t_a)}}$$

$$\frac{E_{fin}}{\eta_{fin}} = \frac{pl}{A_{cs}}$$

$$E_{fin} = \eta_{fin} \times \frac{pl}{A_{cs}}$$

$$\boxed{E_{fin} = \eta_{fin} \times \frac{\text{Surface area}}{\text{Cross sectional area}}}$$

problems:-

1) calucculate the amount of energey required solder fogether two very long pieces of base copper wire 1.5 mm in dia will solder that melts at 190°C the wires are positioned vertically in air at 20°C assume that heat transfer coefficient on the wire surface is 20 W/m²°C & thermal conductivity wire alloy is 320 W/mC.

sol) Given $t_0 = 190°C$ $h = 20$.

$t_a = 20°C$, $d = \frac{1.5\,mm}{1000} = 0.0015\,m$

$p = \pi \times d = 4.71 \times 10^{-3}\,m$ $K = 320\,W/mC$

$A = \frac{\pi}{4} \times d^2 = 1.767 \times 10^{-6}\,m^2$

$Q_{fin} = \sqrt{p\cdot h\cdot K\cdot A_{cs}}\,(t_0-t_a) = 1.25\,W$

Scanned by CamScanner

Estimation of error in Temp measurement in a "Thermometer well"

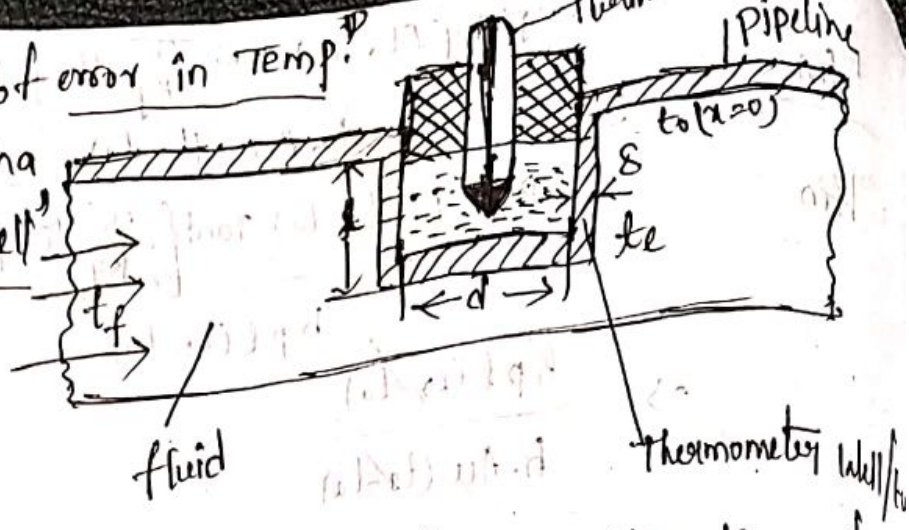

→ Estimating an error in the value of Temp with a thermometer dipped in thermometer well, the theory of fin is helpful

→ A thermometer well is a small tube welded radially through a pipe line through which fluid is flowing whose temp. is measured.

→ When the Temp of the fluid flowing greater than ambient Temp. then the heat flows from fluid to walls of the well

→ Consequently the Temp at the bottom of the well becomes colder than fluid flowing around obviously the Temp. shown by thermometer will not be a ~~room~~ true Temp of a fluid. This error may be calculated by assuming the well to be a ~~fine~~ spine protruding from the walls of a pipe

→ Assuming the tip of a well is insulated means no heat flow takes place.

the Temp distribution at any distance 'x' measured from the pipe wall to well wall is

$$\frac{\theta_x}{\theta_0} = \frac{t_x - t_f}{t_0 - t_f} = \frac{\cosh[m(l-x)]}{\cosh ml}$$

Scanned by CamScanner

at $x = l$, $= \frac{t_l - t_f}{t_0 - t_f} = \frac{1}{\cosh ml}$

Where t_l - Temp recorded by thermometer

perimeter of Well, $p = \pi[d + 2\delta]$

$= \pi[d]$ δ is very small when compared to dia

A_{cs} [Area of crossection] $= \pi \times d \times \delta$

$$\frac{p}{A_{cs}} = \frac{\pi d}{\pi d \delta} = \frac{1}{\delta}$$

$m = \sqrt{\frac{hp}{kA_{cs}}}$

$m =$

→ Thus the temp measured by thermometer isn't effected by dia of Wall.

→ It is abvious that inorder to reduce the ~~Temp~~ measurement error 'm' should be large for the following necessity

→ large value of h, → small value of k → long and Thin well

① A Mercury thermometer placed at oil well is required to measure temp of compressed air flowing in a pipe the Well is 140mm long and is made of steel [k = 50 W/m°C] of 1mm Thickness the Temp recorded by the Well is 100°C While pipe wall Temp is 50°C heat transfer coefficient between the air and Well wall is 30 W/m²°C

→ Estimate truth Temp of air.

Scanned by CamScanner

Given $k_{steel} = 50\ W/m^2{}^\circ C$

$l = 140mm = 0.14m$

$\delta = 1\ mm = 0.001m$

$h = 30\ W/m^2{}^\circ C$ $\quad t_l = 100^\circ C$

$t_0 = 50^\circ C$

We know that $m = \sqrt{\frac{h}{K \cdot \delta}}$

$$m = \sqrt{\frac{30}{50 \times 0.001}} = 24.49$$

N.K.T $\frac{t_l - t_f}{t_0 - t_f} = \frac{1}{\cosh[ml]}$

$$\frac{100 - t_f}{50 - t_f} = \frac{1}{\cosh[24.49 \times 0.14]}$$

$$100 - t_f = 0.064[50 - t_f]$$

$$100 - t_f = 3.23 - 0.064\, t_f$$

$$96.77 - 0.936\, t_f$$

$$t_f = \frac{96.77}{0.936}$$

$$\boxed{t_f = 103.38^\circ C}$$

(2) A Thermometer pocket is inserted in a pipe of 150mm dia carrying hot air. The pocket is made of brass [$k = 70\ W/m^\circ C$] the inner and outer dia of pockets are 10mm & 15mm respectively. The heat transfer coefficient b/w pocket and air

Scanned by CamScanner

is given by $Nu = 0.174 [Re]^{0.618}$ Take $(k)_{air} = 0.035$ W/m°C and depth of pocket is = 50mm Reynold's number of air flow = 25000 find the actual error in Temp Measurement if the pipe wall is at 50°C and air Temp is 150°C

Sol Given

$$Nu = 0.174 [Re]^{0.618} = 0.174 [25000]^{0.618}$$

$$Nu = 90.88$$

$K_{brass} = 70$ W/m°C, $K_{air} = 0.035$ W/m°C

$d_1 = 10mm = 0.01m$, $l = 50mm = 0.05m$

$d_2 = 15mm = 0.015m$

$t_0 = 50°$, $t_f = 150°C$

$$\rightarrow \frac{t_l - t_f}{t_0 - t_f} = \frac{1}{\cosh(ml)}$$

$$\rightarrow m = \sqrt{\frac{h}{K \cdot S}}$$

$$Nu = \frac{Q_{conv}}{Q_{cond}} = \frac{h}{K/l} = \frac{hl}{K} \quad (\because l = d)$$

$$Nu = \frac{h \cdot d_0}{K_{air}}$$

$$90.88 = \frac{h \times 0.015}{[0.035]}$$

$$h = 212.05 \text{ W/m}^2\text{°C}$$

$$m = \sqrt{\frac{h \cdot P}{K \cdot A_{cs}}}, \quad P = \pi d_0 = \pi \times 0.015$$

Scanned by CamScanner

$$A_{cs} = \frac{\pi}{4} \times (d_2^2 - d_1^2)$$

$$P = 0.047 \qquad = \frac{\pi}{4}\left[0.015 - 0.01\right] = 9.8174 \times 10^{-5}$$

$$m = \sqrt{\frac{P \cdot h}{k \cdot A_{cs}}}$$

$$= \sqrt{\frac{0.047 \times 212.05}{70 \times 9.817 \times 10^{-5}}}$$

$$m = 38.08$$

$$\frac{t_l - t_f}{t_0 - t_f} = \frac{1}{\cosh[ml]}$$

$$\frac{t_l - 150}{50 - 150} = \frac{1}{\cosh[38.08 \times 0.05]}$$

$$\frac{t_l - 150}{-100} = 0.291$$

$$t_l = -29.1 + 150$$

$$\boxed{t_l = 120.9}$$

Scanned by CamScanner