* 6451 *

C16–M–406

6451

BOARD DIPLOMA EXAMINATION, (C–16)

SEPTEMBER/OCTOBER - 2020

DME—FOURTH SEMESTER EXAMINATION

PRODUCTION DRAWING

Time : 3 hours] [*Total Marks* : 60

PART—A 5×4=20

Instructions : (1) Answer **all** questions.

(2) Each question carries **five** marks.

1. The dimensions of a shaft and a hole are given below :

Shaft $50^{0\ 002}_{0\ 001}$ Hole $50^{0\ 0012}_{0\ 0010}$

Find out the maximum allowance and hole tolerance. 2½+2½=5

2. Draw the symbolic representation for the following geometrical characteristics to be toleranced : 5

(a) Straightness

(b) Squareness

(c) Symmetry

(d) Angularity

(e) Cylindricity

3. Indicate the surface roughness limiting values for the following manufacturing processes : 5

(a) Die casting

(b) Forging

(c) Turning and milling

(d) Boring

(e) Reaming

4. Write the meaning for the code designation of the following components : 2½+2½=5

(a) Taper key 15 10 70

(b) Hex bolt M10 40NL

PART—B 40

Instructions : (1) Answer *any* **one** question.

(2) Each question carries **forty** marks.

(3) All dimensions are in mm.

(4) Choose suitable scale.

5. Study the given assembly drawing of the knuckle joint and—

(a) draw the component drawings;

(b) apply suitable tolerances and fits;

(c) apply suitable geometrical tolerances to components;

(d) show the surface roughness symbols;

(e) list out the materials for the components;

(f) prepare the process sheet for pin. 20+5+3+3+4+5=40

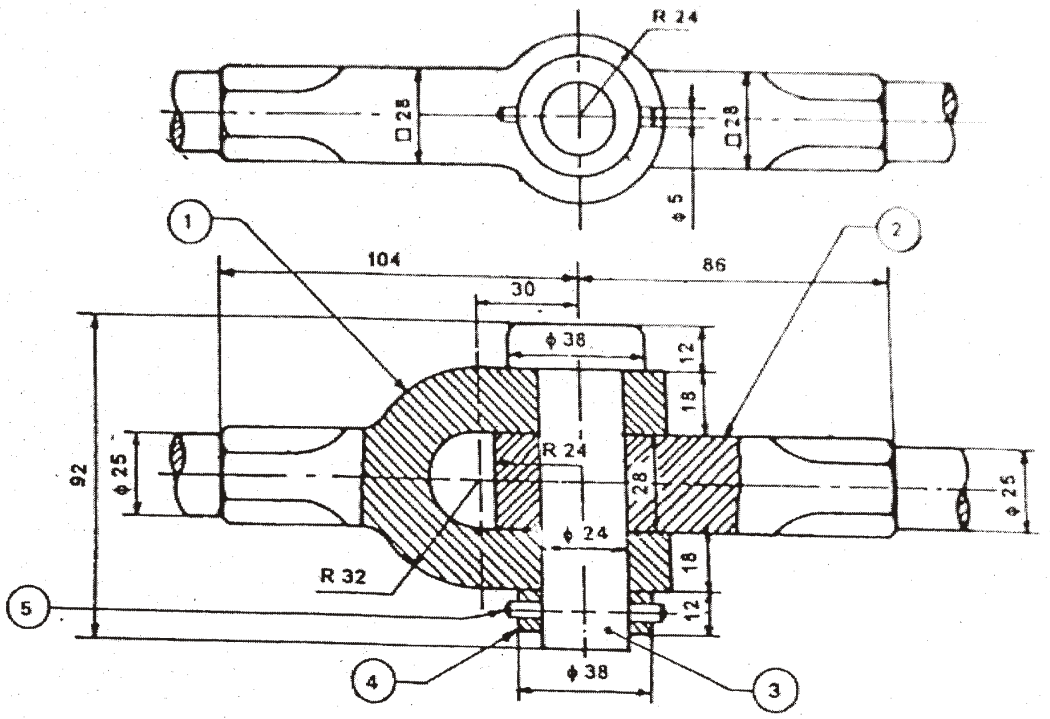

Bill of material

Part No.	*Name*	*Qty.*
1.	Fork end	1
2.	Eye end	1
3.	Pin	1
4.	Collar	1
5.	Taper pin	1

6. Study the given assembly drawing of the bushed pin-type flanged coupling and—

(a) draw the component drawings;

(b) apply suitable tolerances and fits;

(c) apply suitable geometrical tolerances to components;

(d) show the surface roughness symbols;

(e) list out the materials for the components;

(f) prepare the process sheet for flange 2. 20+5+3+3+4+5=40

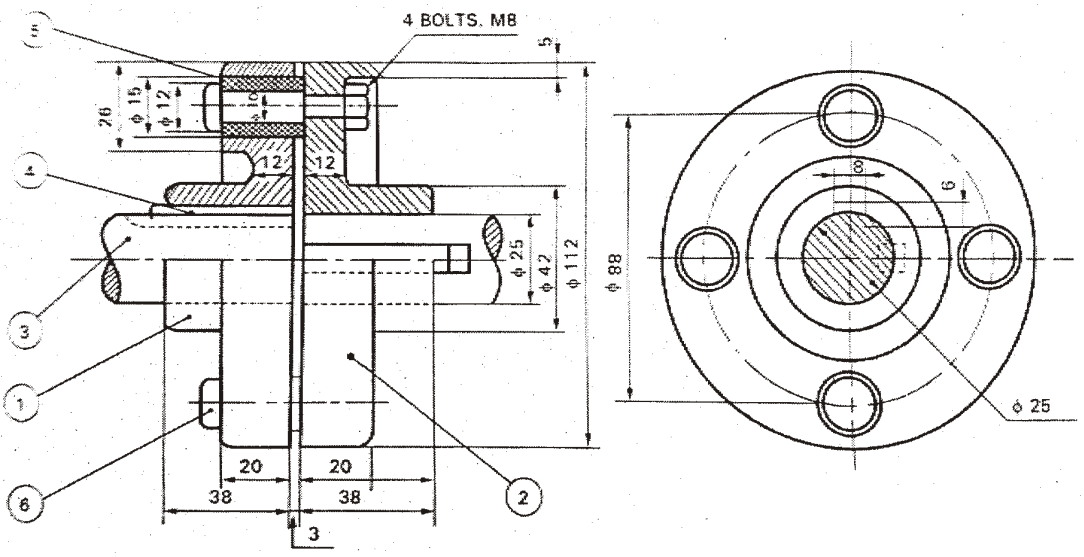

Bill of material

Part No.	*Name*	*Qty.*
1.	Flange	1
2.	Flange	1
3.	Shaft	2
4.	Key	2
5.	Rubber bushes	—
6.	Bolt	4

★ ★ ★

C16–M–406

6451

BOARD DIPLOMA EXAMINATION, (C–16)

OCTOBER—2020

DME—FOURTH SEMESTER EXAMINATION

PRODUCTION DRAWING

Time : 3 hours] [*Total Marks* : 60

PART—A 5×4=20

Instructions : (1) Answer **all** questions.
(2) Each question carries **five** marks.
(3) Draw the following neatly with proportionate dimensions.
(4) Use of production drawing tables is allowed.

1. Calculate the values of maximum clearance, hole tolerance and shaft tolerance for the following dimensions of assembled part :

Hole $\begin{matrix}44.500\\44.515\end{matrix}$ Shaf $\begin{matrix}43.975\\43.957\end{matrix}$

2. Draw the tolerance character symbol for the following :

(a) Angularity

(b) Run out

(c) Profile of any surface

(d) Flatness

(e) Straightness

3. Mention the roughness grade symbol for the following roughness values :

(a) 50 μm

(b) 25 μm

(c) 1·6 μm

(d) 0·4 μm

(e) 0·05 μm

4. Write the meaning of following symbols/specifications :

(a) Fe 410 Cu-k

(b) 30 CS B

(c) Hex bolt M 30 × 1·0 × 100 1S136454·6

(d) O-ring 10/2·5, viton

(e) Bearing No. 305

PART—B 40

Instructions **:** (1) Answer *any* **one** question.

(2) Each question carries **forty** marks.

5. Study the given assembly drawing of the Knuckle joint shown in Fig. 1.

(a) Draw the part drawings for Fork End and Eye End 20

(b) Select suitable fits and tolerances 4

(c) Prepare the process sheet 7

(d) Indicate the surface roughness symbols and geometrical tolerance symbols 6

(e) List out the materials and quantity of the components. 3

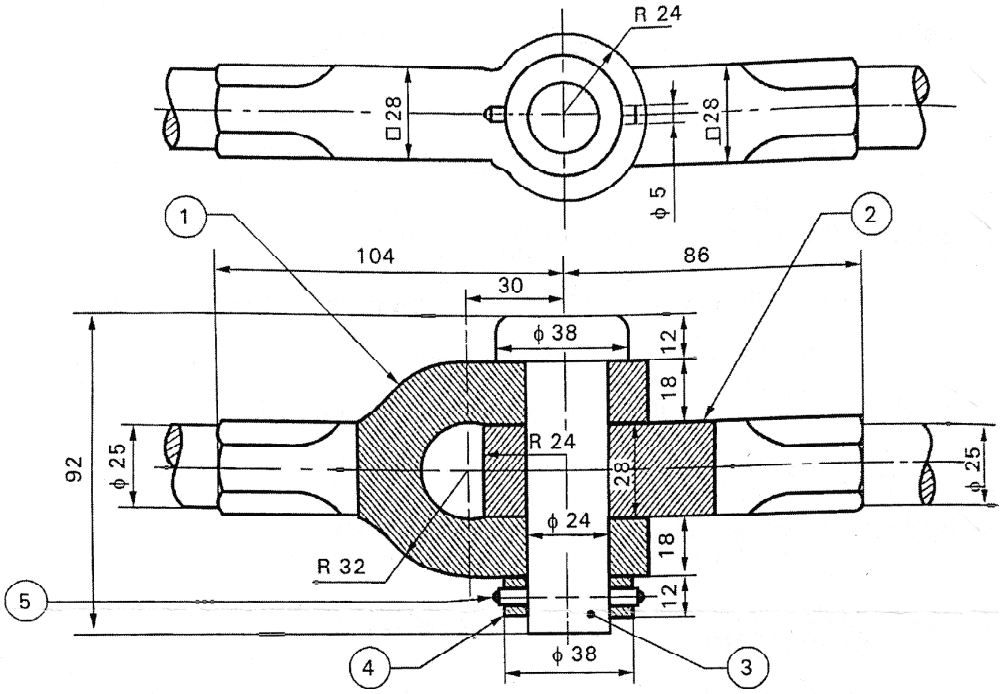

Bill of material

Part No.	Name	Raw material	Qty.
1.	Fork end	FS – Forging	1
2.	Eye end	FS – Forging	1
3.	Pin	MS – ϕ40 × 95	1
4.	Coller	MS – ϕ40 Bar stock	1
5.	Taper pin	MS – Std. component	1

Fig. 1

6. Study the given assembly drawing of the tool post shown in Fig. 2.

(a) Draw the part drawings for pillar, block and screw 20

(b) Select suitable fits and tolerances 4

(c) Prepare the process sheet 7

(d) Indicate the surface roughness symbols and geometrical tolerance symbols 6

(e) List out the materials and quantity of the components. 3

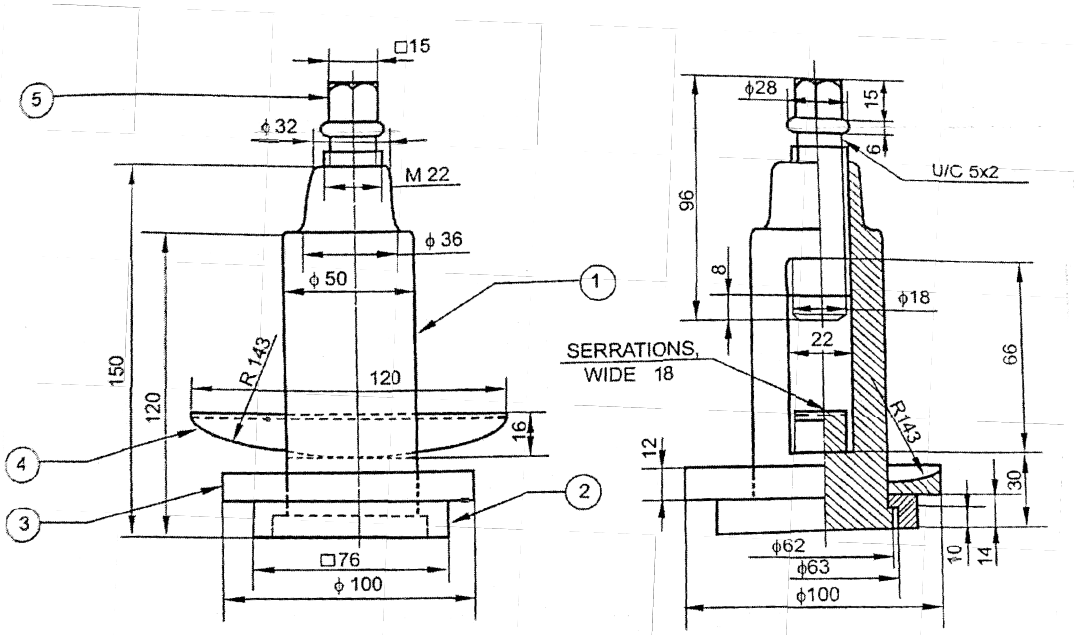

Bill of material

Part No.	Name	Raw material	Qty.
1.	Pillar	MCS – Forging	1
2.	Block	MCS – Forging	1
3.	Ring	MS – Forging	1
4.	Wedge	MCS – Forging	1
5.	Screw	MCS – ϕ32 Bar stock	1

Fig. 2

★ ★ ★