UNIT-IV
Telephone Networks

Introduction:

- Public switched telephone network (PSTN) or Plain old telephone system (POTS) is the largest telecommunication network that exists world wide.
- Major systems involved in telecommunication networks
  - Subscriber end equipments
  - Subscriber loop systems
  - Switching systems
  - Transmission systems
  - Signaling systems

4.1 Subscriber Loop Systems:

- The telephones are connected to the local switching office.
- The two wire twisted pair connection between telephone and central office is called as local loop. The local loop is also called as subscriber loop.
- By using these two wires full duplex communication with dialing and signaling is possible.
- To run cable pair physically from every subscriber to central office is complicated process. Usually a four level of cabling is used, the cable hierarchy for subscriber loops is shown in below figure.

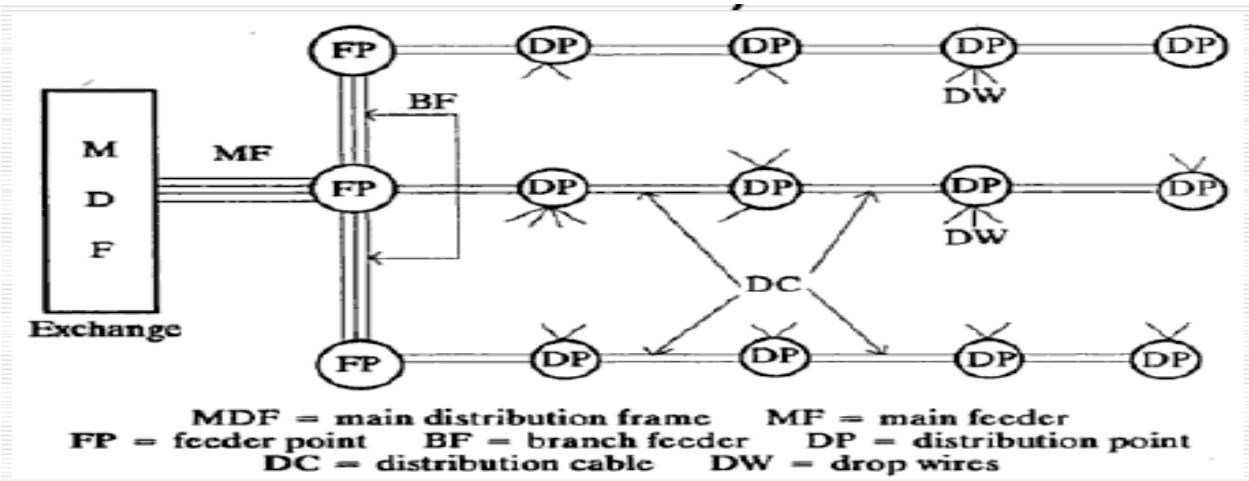

❑At the subscriber end , the drop wires are taken to a distribution point.

❑The drop wires are the individual pairs that run into the subscriber premises.

❑At the distribution point , the drop wires are connected to wire pairs in the distribution cables.

❑Many distribution cables from nearby geographical locations are terminated on a feeder point where they are connected to the branch feeder cables which in turn , are connected to the main feeder cable.

❑The main feeder cables carry typically 100-2000 wire pairs, where as the distribution cable carry 10-500 pairs.

❑The feeder cables are terminated on the main distribution frame (MDF) at the exchange.

❑Subscriber pairs and exchange pairs are interconnected at the MDF by means of jumpers

- The subscriber loop lengths are desired to be as large as possible to cover the large area under the same exchange. But the two factors limiting the length of subscriber loops are:
  - **Signaling limits:** Current delivered should be high enough.
  - **Attenuation limits: The** resistance of the cables increase in proportion to length

Table 9.1 Technical Specifications for Subscriber Lines

Gauge No. (AWG)	Diameter (mm)	D.C. resistance (Ω/km)	Attenuation (dB/km)
19	0.91	26.40	0.71
22	0.64	52.95	1.01
24	0.51	84.22	1.27
26	0.41	133.89	1.61

- Attenuation limits arise from the A.C response of the loop and refers to loop loss in decibels.

- The criterion here is to ensure that quality of reception at the subscriber end is satisfactory.

- A rating system standardised by CCITT to grade customer satisfaction is known as the reference equivalent (RE).(TRE & RRE)
- TRE: Transmit Reference Equivalent
- RRE: Receive Reference equivalent
- The standard setup consisting of a telephone transmitter, receiver and network is established in the ITU laboratory in Geneva and is known as NOSFER
- (Nouveau Systame Fondamental Pour la Determination des Equivalents de Reference).

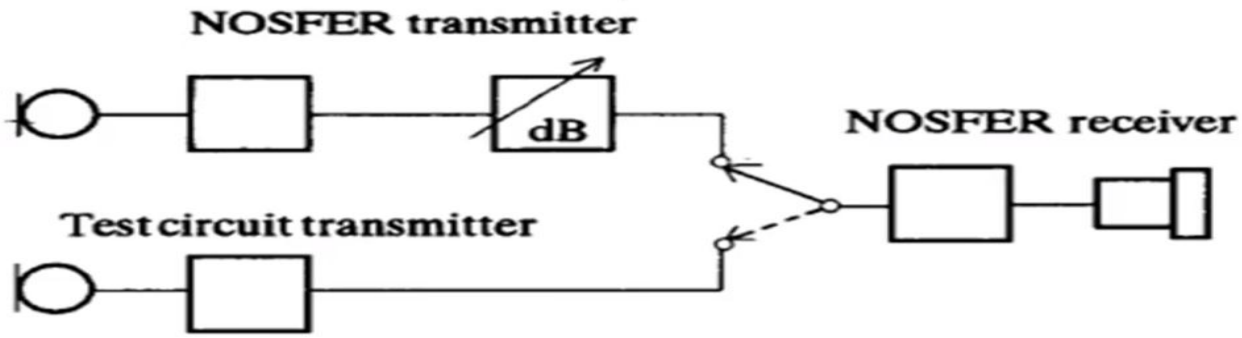

(a) Transmit reference equivalent

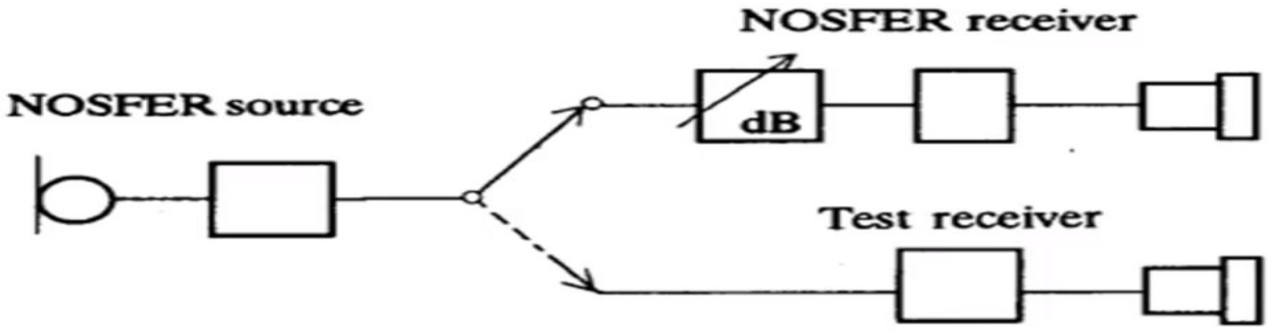

(b) Receive reference equivalent

Fig. 9.2 NOSFER reference equivalent systems.

In rural areas , subscribers are generally dispersed . It is both unnecessary and expensive to provide a dedicated pair for every subscriber. Three techniques are used to gain on the number pairs: **1.Party lines 2.Concentrators 3.Carrier systems.**

In the first technique, two or more subscribers are connected to one line which is termed party line. This technique has drawbacks that only one subscriber at a time can use the line . Selective ringing is difficult and privacy is not maintained.

In the second technique a concentrator expander(CE) is used near the cluster of users and another one at the exchange end.
The CE at the exchange end remotely powers and controls the CE at the subscriber end.

Carrier systems employ multiplexing techniques and enable all the users to access the exchange over a single line.

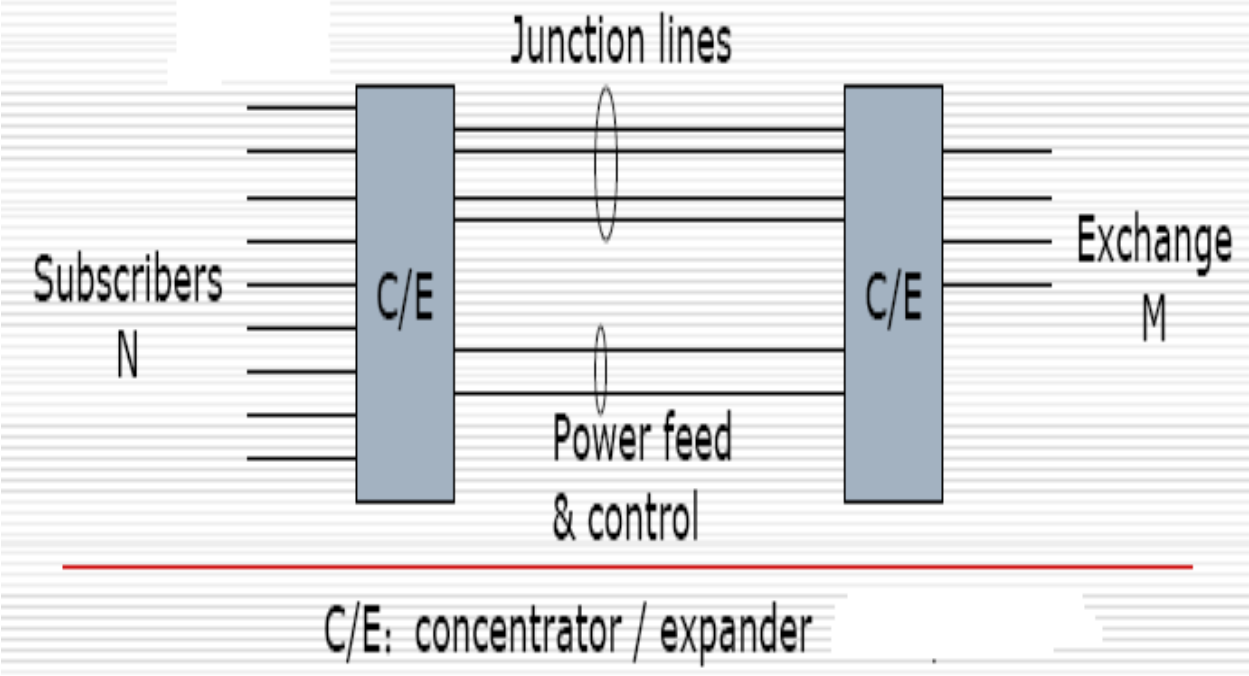

Subscriber Loop Interface:

Signalling and voice transmission on the subscriber lines requires that the exchange performs a set of functions. These functions are performed by an interface at the exchange end known as subscriber loop interface. Some functions are required in analog networks, some in digital networks others in both. The complete set of functions are known by an acronym **BORSCHT.**

✓**Battery.** To enable dc signalling and to provide bias current for carbon microphone, a battery of about 48 V is connected to subscriber loop at exchange.

✓**Overvoltage protection.** Protection of equipment and personal from lightning strikes and power line induction or shots.

✓**Ringing.** Application of a 20 Hz signal at 86 V rms for ringer excitation.

✓**Supervision.** Supervise the network by detecting the off hook/on hook and flow/noflow dc current.

✓**Coding**. In the case of digital end office, analog to digital coding and digital to analog decoding functions necessary.

✓**Hybrid.** For two wire to four wire conversion, hybrid in necessary.

✓**Test.** Line test toward the subscriber disconnection of the switch.

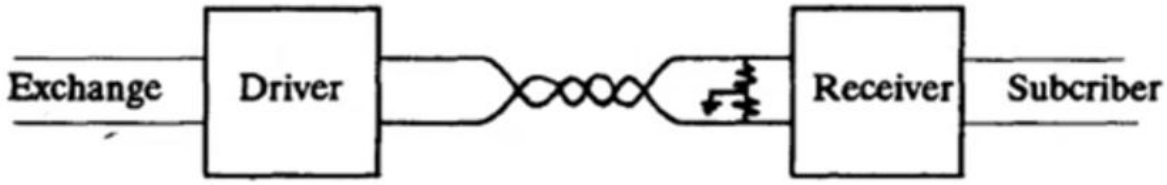

Fig. 9.5 Balanced circuit connection.

Subscribers are connected to the exchange via 2-wire circuits. These circuits use a balanced connection shown above. Balanced connections overcome many drawbacks of unbalanced circuits.

2-wire to 4-wire transformer hybrid:

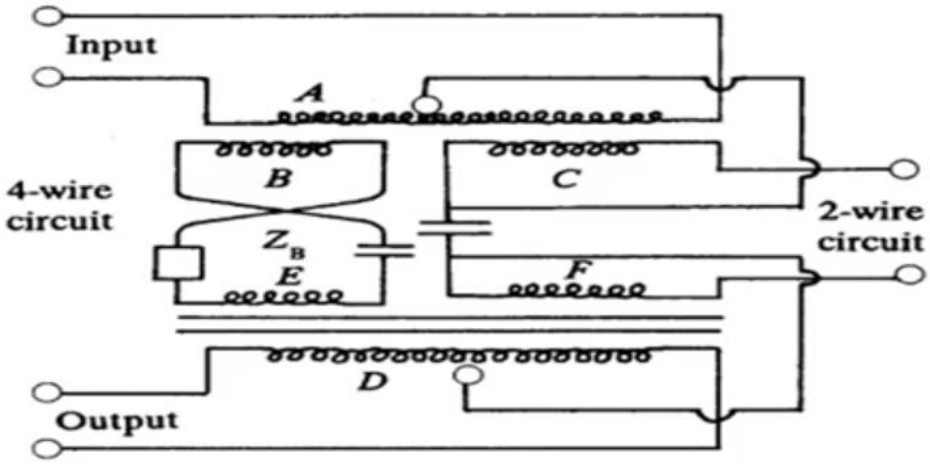

Fig. 9.6 Two-wire to 4-wire transformer hybrid.

Digital exchanges require receive and transmit signals on separate two-wire circuits. This is called two-wire to four-wire conversion. Such a conversion is normally required for trunk transmission in analog exchanges. The circuit that performs the 2-wire to 4-wire conversion is called hybrid.

- The operation of the circuit is as follows:
- The input signal is electromagnetically coupled to the B and F windings equally.
- Through the C winding, the input is coupled to the 2-wire circuit. The same signal when it flows through the balanced 2-wire couples the signal to winding D through winding C.
- The signal induced in B flows through E and induces a current in D that opposes the current induced by F.
- If the impedance ZB exactly matches that of the 2-wire circuit, the effect of input signal on the output winding D is completely nullified.
- In similar way, the input signal from the subscriber end is completely nullified from coupling into the winding A.

4.2 Switching Hierarchy and Routing

- Telephone networks require some form of interconnection of switching exchanges to route traffic effectively and economically.
- Exchanges are interconnected by groups of trunk lines, usually known as trunk groups that carry traffic in one direction. Two trunk groups are required between any two exchanges.
- The interconnection of exchanges can be done in three basic topologies.
    - Mesh topology
    - Star topology
    - Hierarchy network

- **Mesh network**
  - Fully connected network
  - Number of Trunk groups is proportional to square of the exchanges interconnected
  - Suitable for heavy traffic among exchanges

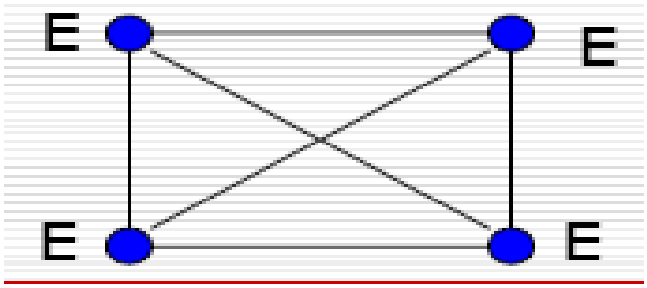

- **Star topology:**
  - Star topology uses an intermediate exchange called tandem exchange through which all other exchanges communicate.
  - Star topology is used where traffic between exchange is very low.
  - Two level star network can be built by interconnecting many star networks is shown in below figure.

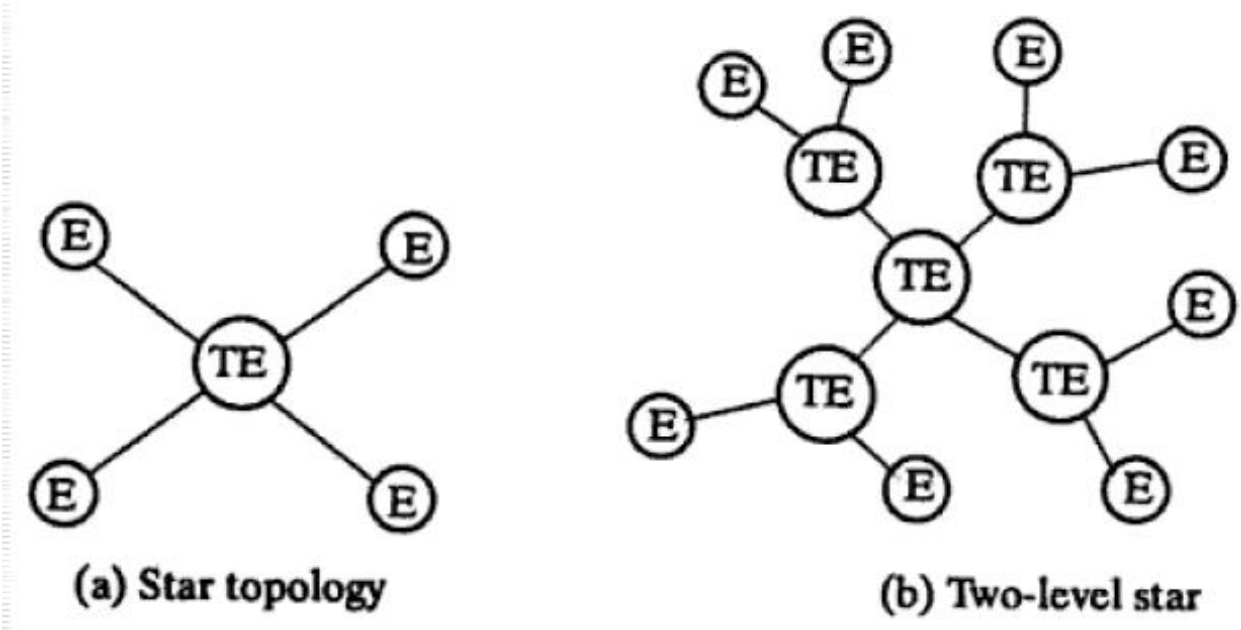

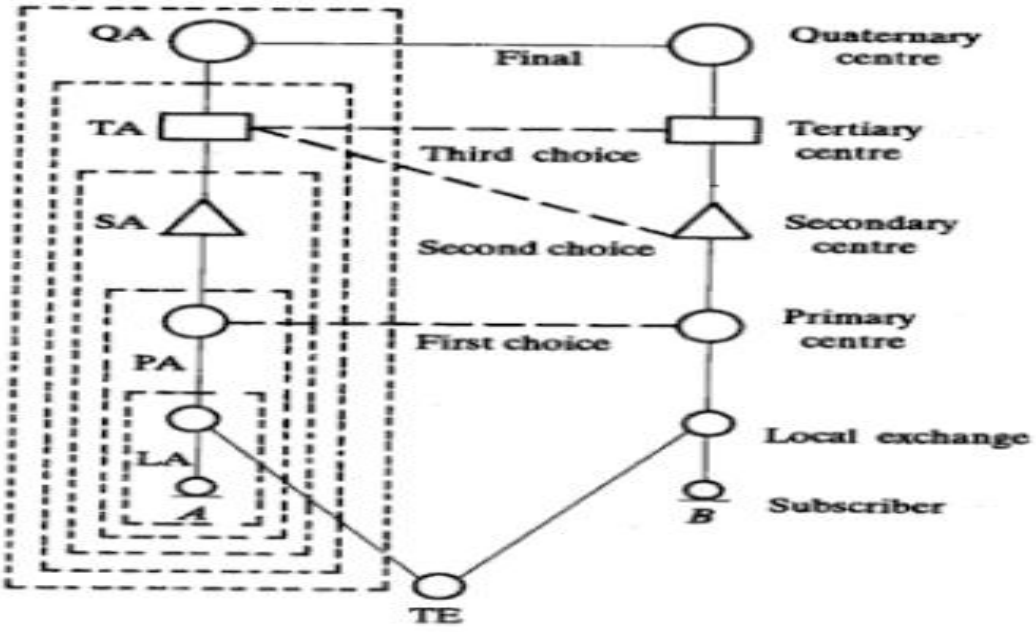

(c) CCITT hierarchical structure

LA, PA, SA, TA, QA = local, primary, secondary, tertiary and quarternary areas respectively E = exchange TE = tandem exchange

Fig. 9.7 Telecommunication network topologies.

Hierarchy network:

- Hierarchical network is an orderly construction of multilevel star networks.
- Hierarchical networks are capable of handling heavy traffic where required with minimum numbered trunk groups.
- A five level switching hierarchy recommended by CCITT is shown in above figure.
- Traffic from subscriber A to Subscriber B and vice-versa flows through the hieghest level of hierarchy known as final choice.
- If there is high traffic intensity between any pair of exchange then direct trunk groups may be established between them as shown by dashed lines. These direct routes are known as high usage routes.
- The overflow traffic is routed along the hierarchical path and no overflow for final route.
- The first choice routing for traffic between subscribers A and B is via high usage route across the primary centre. The second and third choice route are shown by dashed line.
- A Hierarchical system of routing leads to simplified switch design.
- Three methods are commonly used for deciding route for a particular connection.

- Right-through routing
- Own-exchange/distributed routing
- Computer-controlled routing

- **Right-through routing**
  - The original exchange determines the complete route from source to destination.
  - There are a number of predefined routes.
  - A route is selected based on certain criteria, such as time of the day, distribution of the traffic etc..
  - No routing decisions are taken at the intermediate exchanges/nodes.

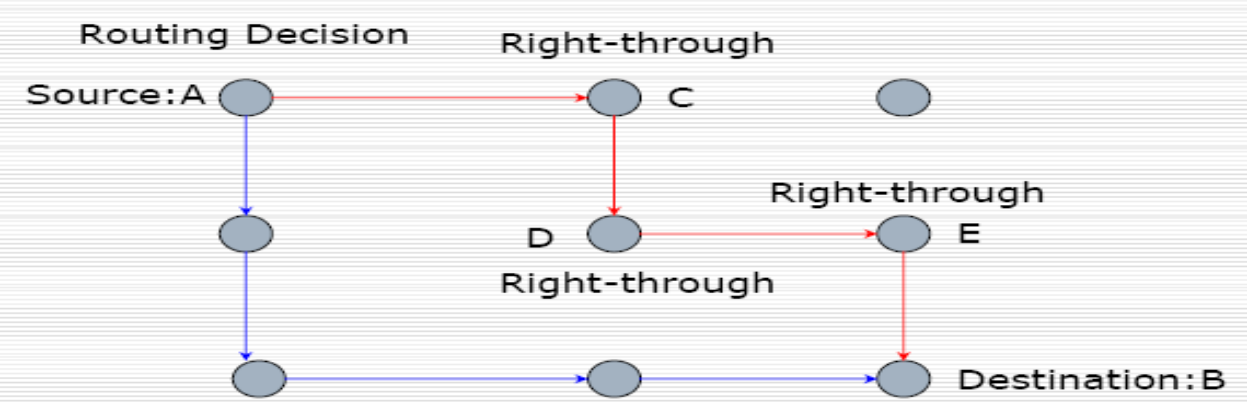

- **Own-exchange/distributed routing**
  - Alternative routes can be chosen at the intermediate nodes.
  - Capable of responding to changes in traffic loads and network configurations.
  - Minimal modifications are required when new exchanges are added.

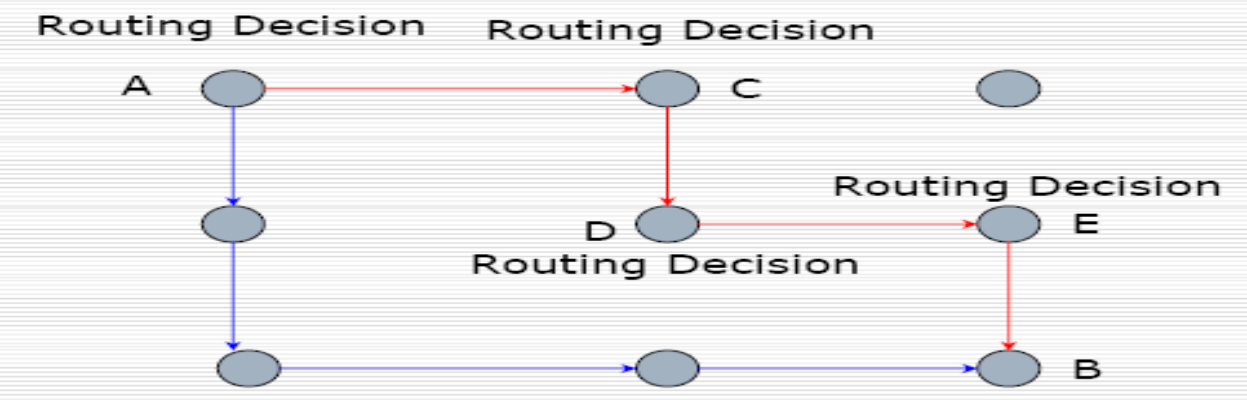

- **Computer-controlled routing**
  - Based on the use of common channel signaling (CCS) systems.
  - In CCS, there is a separate computer-controlled signaling network.
  - A number of routing methods can be implemented.

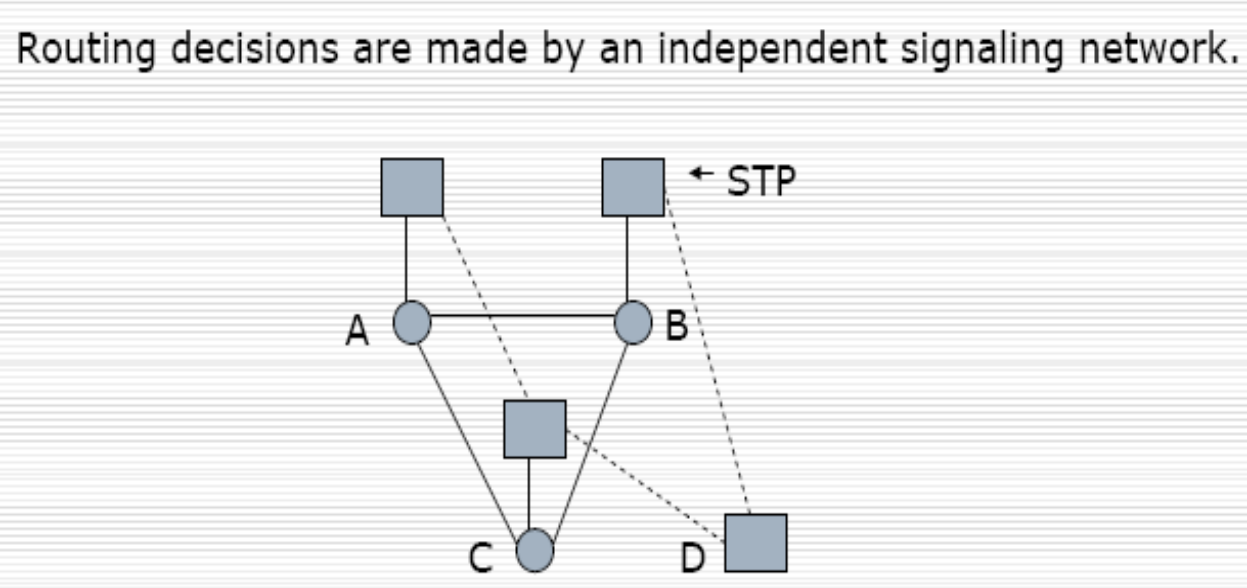

4.3 Transmission Plan

- Transmission quality and efficiency of operating of signaling impose limit on number of circuits connected in tandem.
- CCITT lays down certain guidelines in this regard in its recommendations Q.40:
  - The maximum number of circuit to be used in an international call is 12.
  - No more than four international circuits be used in tandem between the originating and the terminating international switching centres.
  - In excepted cases and for a low number of calls, the total number of circuits may be 14, but even in this case, the international circuits are limited to a maximum of four.
- Factors in Transmission loss budget
  - Line loss
  - Switch loss

- Echo level
- Singing

- **Echo:** reflect a part of the incoming speech signal on to the outgoing circuit, which returns to the speaker as echo.

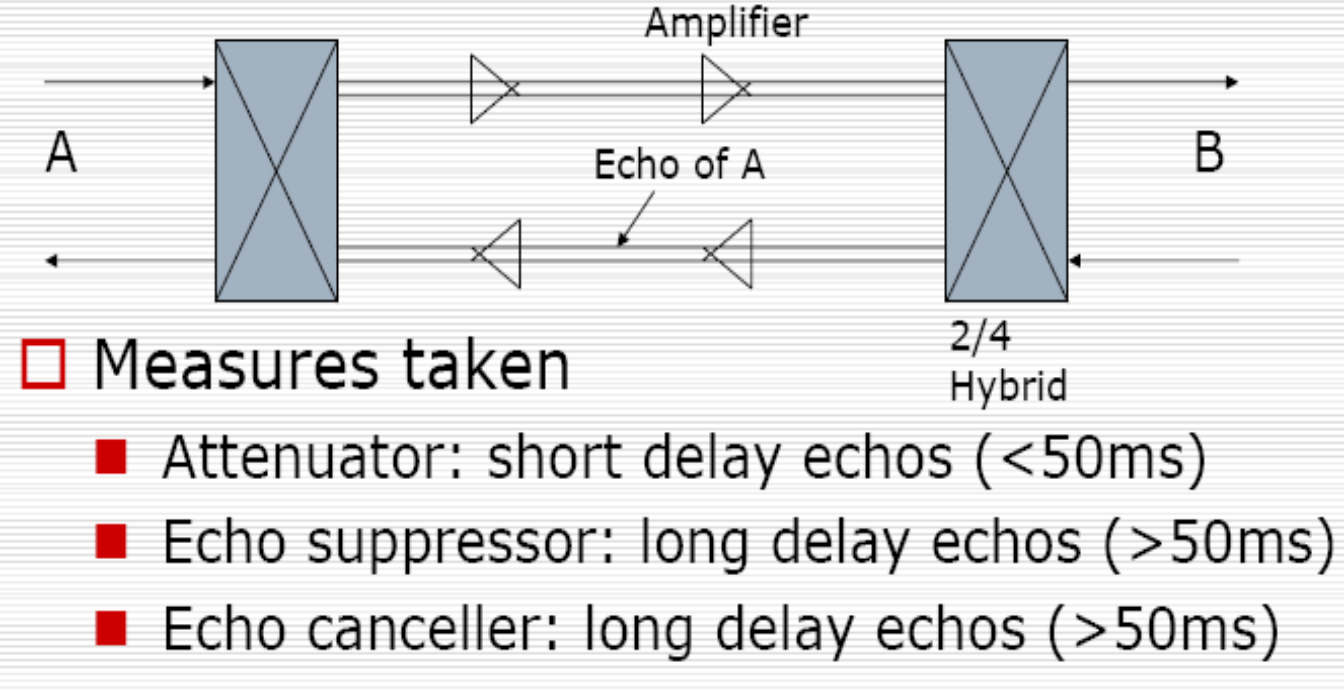

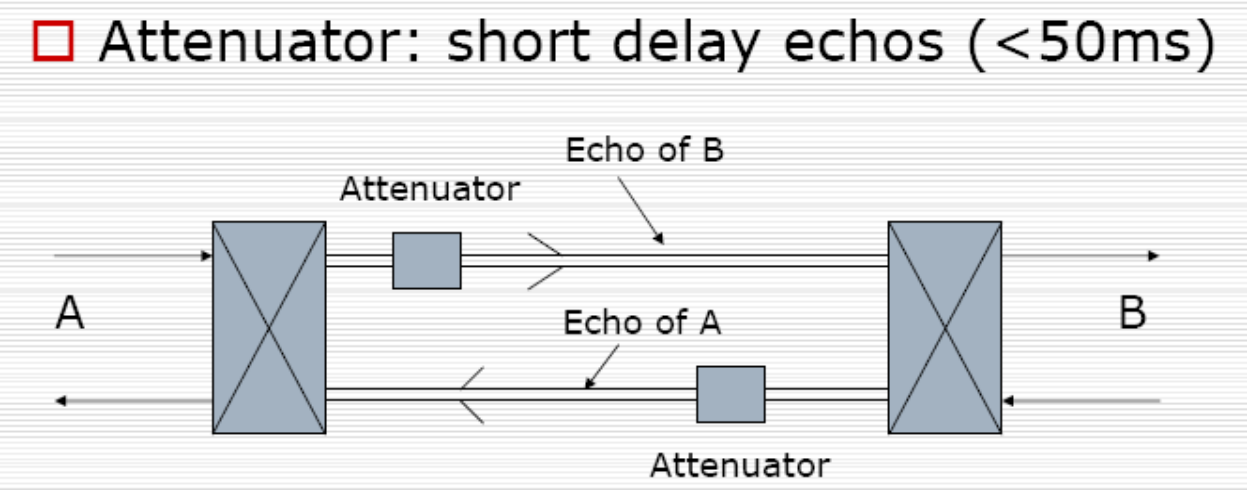

- Echo suppressor: long delay echos (>50ms)

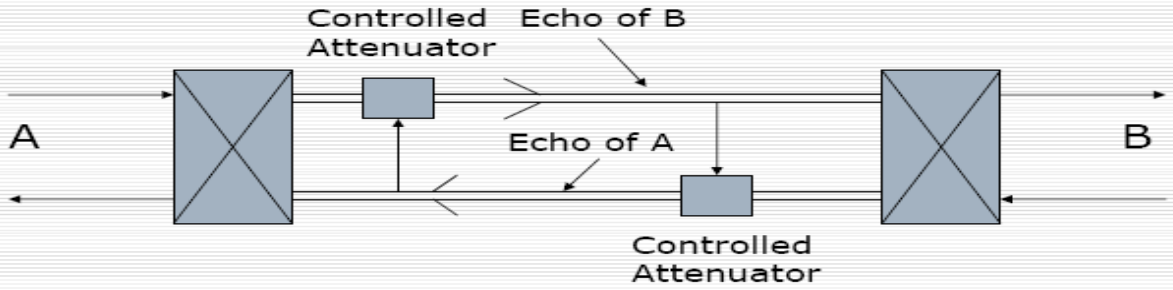

- Echo canceller: long delay echos (>50ms)

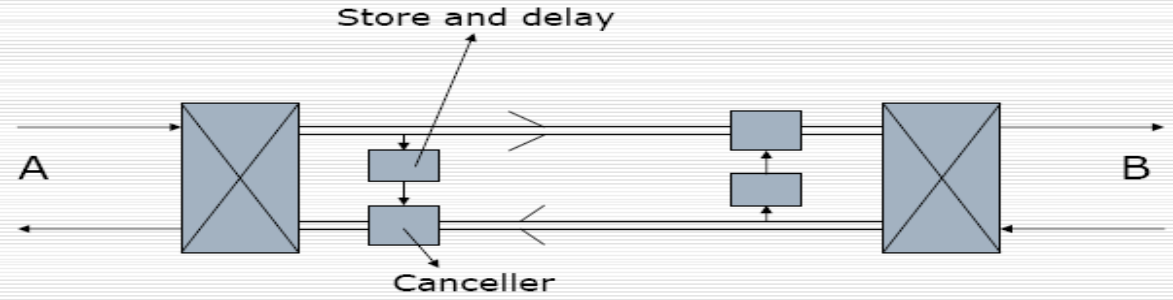

- Singing: both talker and listener are disturbed.

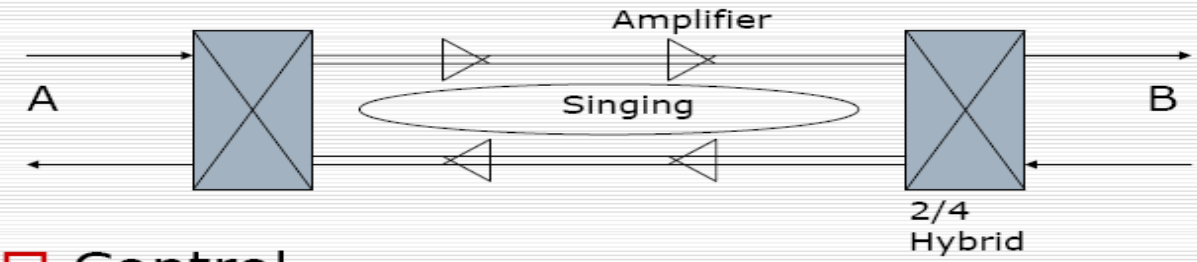

- Control
  - CCITT: a minimum loss of 10dB

The amount by which the reflected signal is attenuated is known as return loss. This is given by

$$RL = 20 \log \frac{Z_4 + Z_2}{Z_4 - Z_2} \text{ dB}$$

where

RL = return loss
Z_4 = impedance of the 4-wire circuit
Z_2 = impedance of the 2-wire circuit

or, in terms of power,

$$RL = 10 \log \frac{P_4}{P_4 - P_2} \text{ dB}$$

P 4 = incoming power on the 4-wire circuit
P2 = power reaching the 2-wire circuit
P4 -P2 = power reflected on to the return path
or,
in terms of signal voltages,

$$RL = 20 \log \frac{V_4}{V_4 - V_2} \text{ dB}$$

$$= 20 \log \frac{1}{r_c}$$

where r_c is the reflection coefficient defined as

$$r_c = \frac{\text{reflected signal}}{\text{incident signal}}$$

If the two networks are perfectly balanced, then Z4 = *Z2. Therefore,* from Eq. we have .

$$RL\,(\text{balanced}) = 20\log\frac{2Z_2}{0} = \infty$$

The return loss is infinite, i.e. the return signal experiences an infinite attenuation and hence there is no reflected signal.

4.4 Transmission System

- Modern long distance transmission systems can be placed under three broad categories:
  - 1. Radio Systems
  - 2. Coaxial cable systems
  - 3. Optical fiber systems
- The signal transmission advanced from wire transmission to wireless transmission. The Radio systems provide wireless transmission, the coaxial cable systems allow transmission of signal through wire and the fiber optic systems provide communication through optical fibers.
- Radio communication deals with electronic radiation of electromagnetic energy from one point to another through the atmosphere or free space.
- Depending on the mechanism of propagation, radio communication can be placed under four categories:
  - 1. Skywave or ionospheric communication
  - 2. Line of sight (LOS) microwave communication limited by horizon.

- 3. Tropospheric scatter communication
- 4. Satellite communication

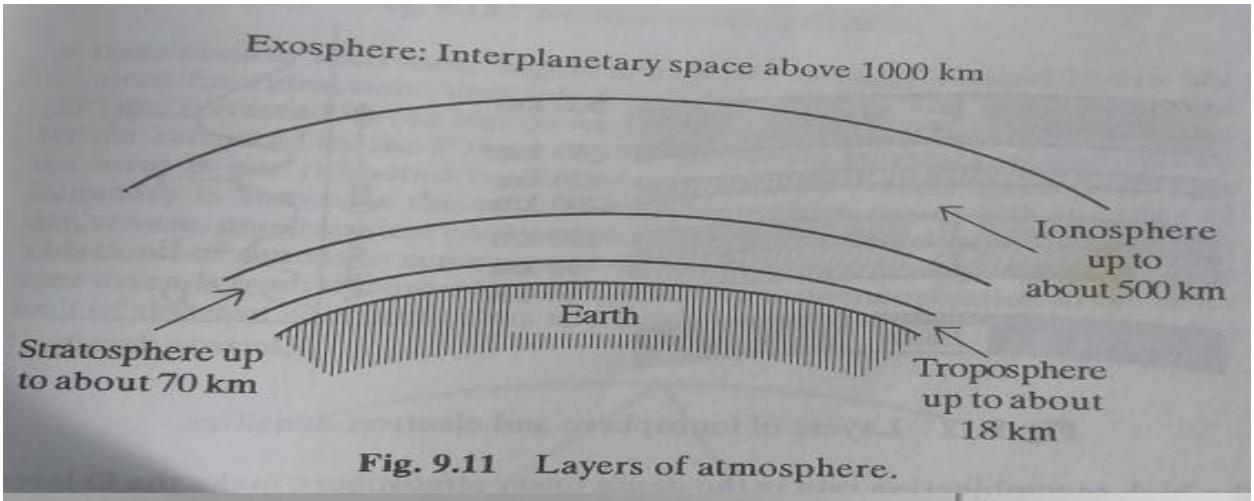

Fig. 9.11 Layers of atmosphere.

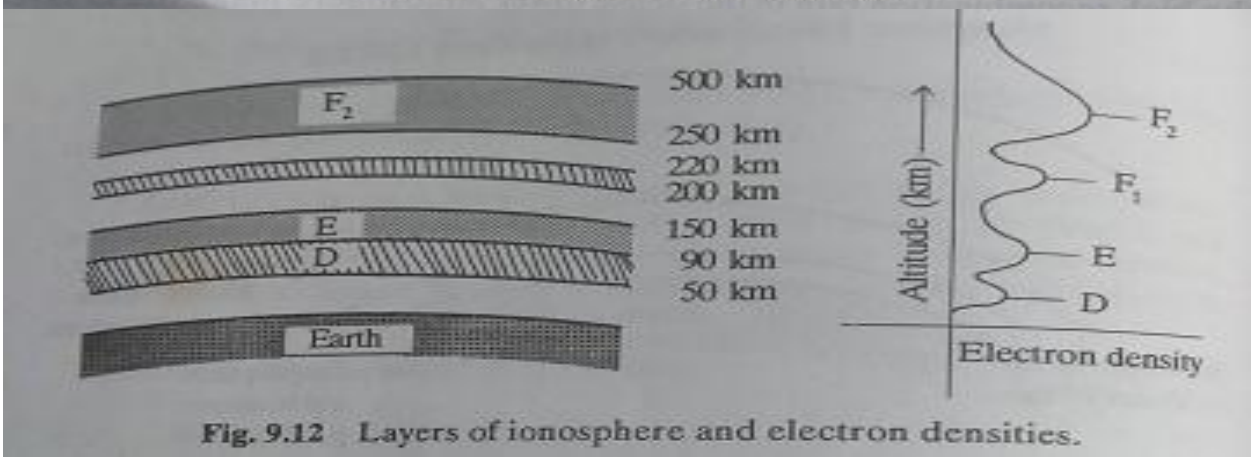

Fig. 9.12 Layers of ionosphere and electron densities.

4.5 Numbering Plan

- 1. Objective of Numbering Plan is to uniquely identify a subscriber who is connected to a telecommunications Network.
- 2. Initially numbering was restricted to single local exchanges with each exchange identified by its name. Ex: NUMERING AT LOCAL EXCHANGES 000, 001 …. 999
- 3. With introduction of multi-exchange areas common numbering plans started evolving.
- 4. Introduction of Subscriber trunk dialling (STD) for inter city/town dialling led to the introduction of National Numbering. Ex: STD NUMBERING 20-000, 20-001, …. 20-999

- 5. Later, the development of International Subscriber Dialling (ISD) led to the development of International Numbering Plans. Ex: INTERNATIONAL NUMBERING 254-20-000 , 254-20-001 …. 254-20-999

- **International Numbering Plan** has been defined by ITU in recommendations E160-E163.

- For numbering purpose, the world is divided into zones, each zone is having single digit code. Each country within a zone has the zone number as the first digit of its country code. The european numbering zone has been allocating two codes because of the large number of country codes required within this zone.

- Every international telephone number consists of two main parts namely country code and national number as in below figure.

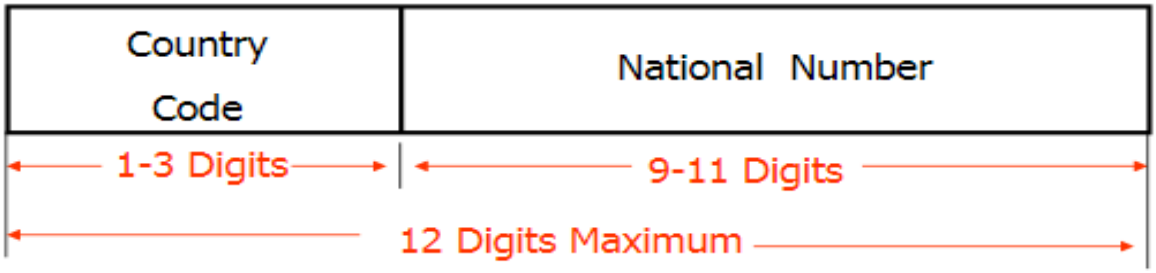

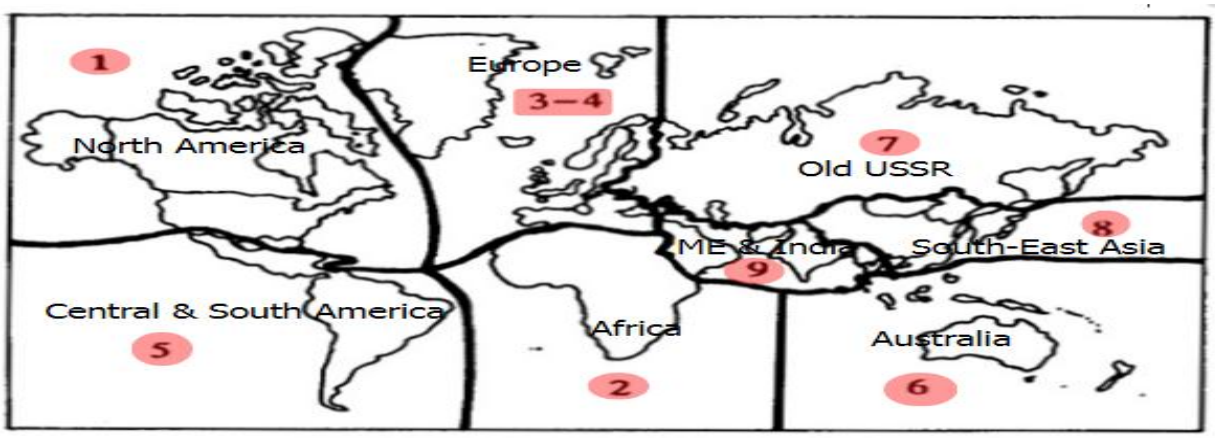

National numbering plan consists of three parts, they are

- **1. Area/trunk code:** it identifies a particular numbering area of the called subscriber. Therefore, it determines the routing for a trunk call and its charge. A numbering area e.g. 20 for Nairobi or 56 for Kakamega (Telkom)

- **2. Exchange code:** It identifies a particular exchange within a numbering area. It determines routing for incoming trunk from other numbering area or in the same numbering area.

- **3. Subscriber line number:** it is used to select the called subscriber line at the terminating exchange. CCITT terminology states that, a subscriber number is the combination of exchange code and subscriber line number.

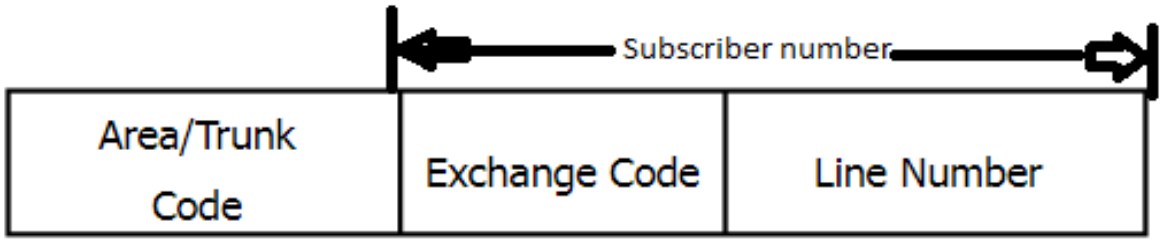

- **GENERAL CATEGORIES OF NUMBER SCHEMES**
- Number Schemes can be Open, Semi-Open or Closed.
- 1. Open Number Scheme (also known as non-uniform numbering scheme) permits a wide degree of variations in the number of digits used to identify a subscriber within a country.
    - Examples: 1.Large city with longer number, 20-2356678

  2.Small town with short numbers, 56-4565
- 2. Semi-Open allows the number length to differ by 1-2 digits. Used in India, Sweden, Switzerland, UK
    - Examples: 1.Big operator with long numbers, 072-52356678

  2.Small operator with short numbers, 078-02358
- 3. Closed numbering plan or uniform numbering plan has a fixed number of digits. Used in USA, Canada, France and recently in Kenya.
    - Examples: 1.Safaricom: 0722523566
    - 2.Airtel: 0733523566

4.6 Charging Plan

- Providing a telecommunication service. calls for investment in capital items as well as meeting operational expenses.
    - a) The capital cost includes that of line plant, switching systems, buildings and land.

- b) Operating costs include staff salaries, maintenance costs, water and electricity charges and miscellaneous expenses.

- A telecommunication administration receives its income from its subscribers.
- A charging plan provides a means for recovering both the capital costs and the operating costs from subscribers.
- **CALCULATING THE COSTS**
- The cost of shared resources like the switching and transmission equipment is amortized among a large number of subscribers over a period of time.
- The cost of dedicated resources like the telephone instrument and the subscriber line (for wired connections) must be recovered from individual customers.
- The operating costs must be worked out depending on the quantum of resources used in providing a service and the duration for which these resources are used.
- **CHARGES LEVIED ON A SUBSCRIBER:**
- A telecommunication service can levy three categories of charges to a subscriber,
  - 1. An initial charge for providing a network connection
  - 2. A rental or leasing charge
  - 3. Charges for individual calls made
- **CHARGES TO INDIVIDUAL CALLS :**
- The following charges are levied to individual calls:
  - 1. Operating costs for telephone exchanges and transmission networks.
  - 2. Government policy charges e.g. policy on subsidy of local calls by trunk/international calls, taxes or USO.
  - 3. Regulator controlled charges, e.g. CAK's guidelines on interconnection.
- **CHARGING METHODS FOR INDIVIDUAL CALLS:**
- 1. Duration Independent Charging
  - Local calls in the fixed Networks are usually charged on a duration independent-basis. The subscriber meter is incremented once at the start of a local call.
- 2. Duration Dependent Charging

- Periodic pulse train of pulses from a common pulse generator operate the subscribers meter; Modern exchanges store date, time and duration in seconds for the purpose of charging; Mobile operators usually use duration dependent charges, i.e per second or per minute.

- **DISTANCE-RELATED CHARGING**

- Distance related charges are used more commonly in fixed telecommunication systems and rarely in mobile.

- They are more realistic because they provide for transmission costs.

Distance (km)	Metering pulse rate (pulses/min)
20 – 50	1.67
50 – 100	5.00
100 – 200	7.50
200 – 500	15.00
500 – 1000	20.00
> 1000	30.00

4.7 Signaling Techniques

- Signaling techniques enable the circuit to function as a whole by inter connecting all varieties of switching systems. There are three forms of signaling involved in a telecommunication network.
    - Subscriber loop signaling
    - Intraexchange or register signaling
    - Interexchange or inter-register signaling
- The **subscriber loop** signaling depends upon the type of telephone instrument used.
- The **intra exchange** signaling refers to the internal portion of a switching system that is heavily dependent upon the type and design of a switching system, which varies depending upon the model.
- The **inter-exchange** signaling takes place between exchanges. This helps in the exchange of address digits, which pass from exchange to exchange on a link-by-link basis.
- The network-wide signaling that involves end-to-end signaling between the originating exchange and the terminating exchange is called the **Line signaling**.

- The two main types of signaling techniques are −
  - **In-Channel Signaling**
    - In-Channel Signaling is also known as **Per Trunk Signaling**. This uses the same channel, which carries user voice or data to pass control signals related to that call or connection. No additional transmission facilities are needed, for In-channel signaling.
  - **Common Channel Signaling**
    - Common Channel Signaling uses a separate common channel for passing control signals for a group of trunks or information paths. This signaling does not use the speech or the data path for signaling.

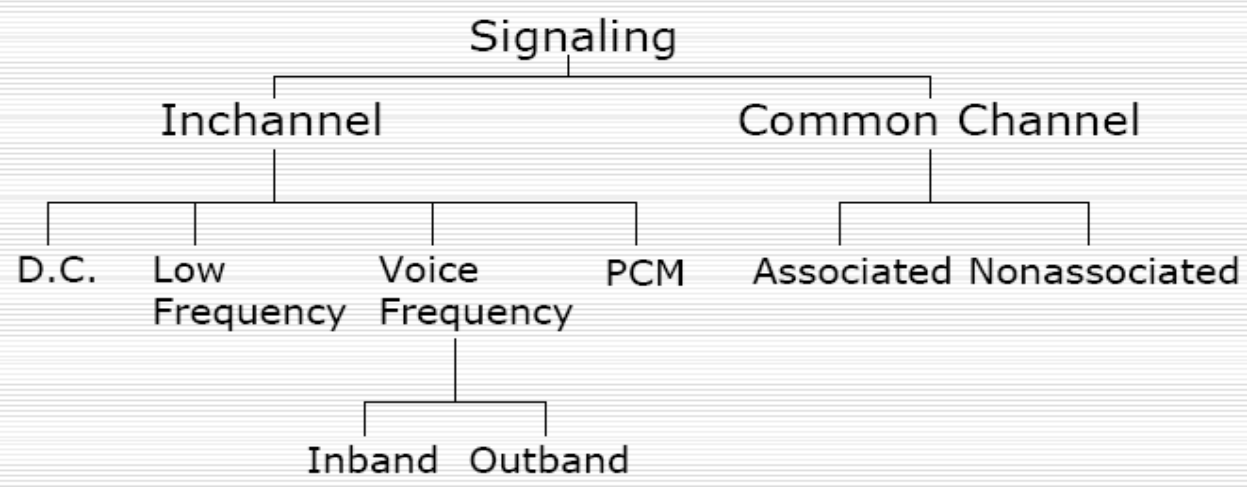

In-Channel Signaling:

- CCITT Inchannel Signaling Systems
  - SS1: 500/20Hz signaling for manual international service
  - SS2: 600/750Hz two voice frequency for semi automatic service
  - SS3: 2280Hz single voice frequency signaling
  - SS4: 2040 and 2400Hz two voice frequency compound end-to-end analog signaling
  - SS5: 2400 and 2600Hz two VF compound analog line signaling and 2/6 multi frequency inband analog inter register signaling with TASI equipment.
  - SS5 bis : Same as SS5 but for circuits with or without TASI equipment.

- **SS4 (inband signaling)**
    - SS4 adopts inband signaling using a combination of two voice frequencies or a single voice frequency.

Timings for SS4 signaling elements

Element	Duration (ms)	Recognition(ms)
Compound	150 ± 30	80 ± 20
Single-short	100 ± 20	40 ± 10
Single-long	350 ± 70	200 ± 40

- Some control signals in SS4

Control signal	Code
Terminal seizure	PX_s
Transit seizure	PY_s
Clear forward	PX_l
Forward transfer	PY_l

P=prefix element (2-VF compound)
Xs=2040Hz short Xl=2040Hz long
Ys=2400Hz short Yl=2400Hz long

- Digits of the dialed number
    - Transmitted as binary codes of four elements.
    - Binary ‘1’: 2040Hz
    - Binary ‘0’: 2400Hz
    - Pulse duration: 35±7ms
    - Gap between neighbor digits: 35±7ms
- **SS5 (inband signaling)**
    - Line signaling

- Compound of the two voice frequencies or a continuous single frequency.

- Interregister signaling:
  - 2-out-of-6 MF (multiple frequency) code.
- TASI
  - Attempt to improve trunk utilization by assigning a circuit to a speech channel only when there is speech activity.
  - A technique to support more speech channels with a number of trunks.
  - Leads to speech/signaling clipping.
- Techniques used to maintain trunk channel association during the signaling period:
  - The address information is transmitted as a block after gathering all the address digits, and the gaps are ensured to be less than the speech detector hangover time.
  - Address digits are transmitted as and when they arrive and a lock tone is transmitted during the gaps.

- **E and M signaling control**
  - A standard method of transferring signaling information between the switching equipment and the signaling equipment.
  - M-lead: carries signals from the switching equipment to the signaling equipment.
  - E-lead: carries signals from the signaling equipment to the switching equipment.

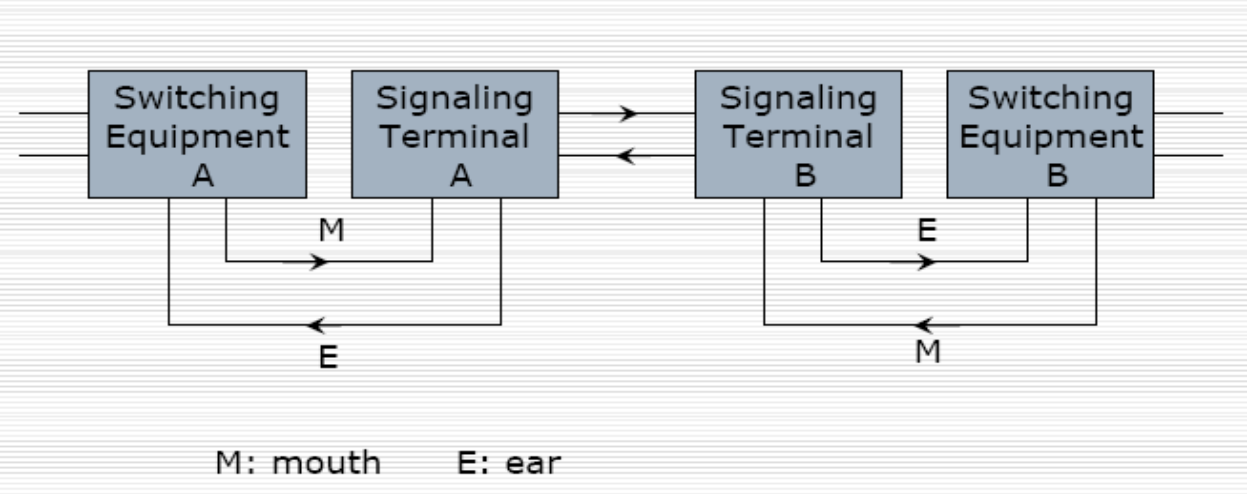

- **Outband signaling:**
  - Outband signaling types
    - d.c. signaling
    - Low frequency a.c. signaling
    - a.c. signaling above speech band
    - Inslot PCM
  - Usage
    - Done on link-by-link basis
    - End-to-end signaling is precluded
- Outband signaling with E and M control

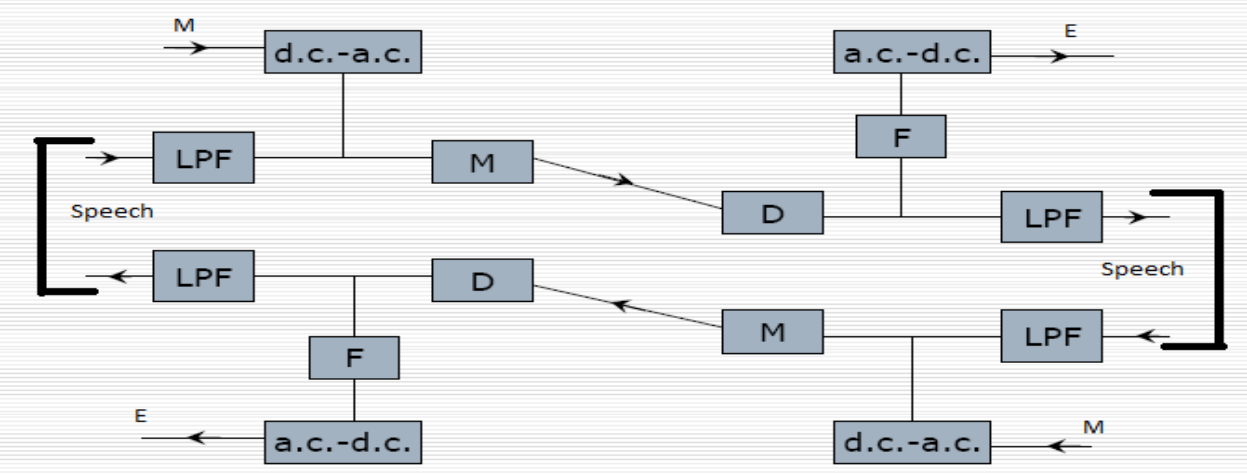

- **Built-in PCM signaling**
  - In-slot signaling
    - The signaling information pertaining to a particular speech channel is carried in the same time slot as the speech. Example: Bell 24-channel system.
  - Out-slot signaling
    - The signaling information pertaining to a particular speech channel is carried in a separate time slot. Example: CEPT 30-channel system
- Bell D2 24-channel multiframe PCM signaling structure

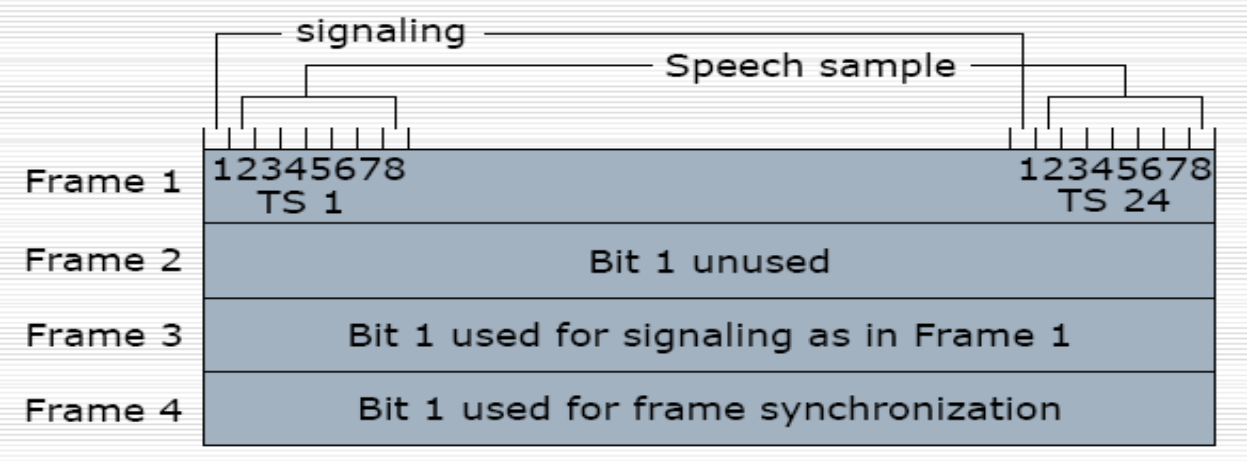

- CEPT 30-channel system outslot signaling
  - Totally 32 time slots per frame
  - Time slot 0 is used for synchronization
  - Time slot 16 is used for signaling, carrying signaling information for two speech channels each time.
  - A multiframe structure (16 frames) is adopted for signaling purpose.

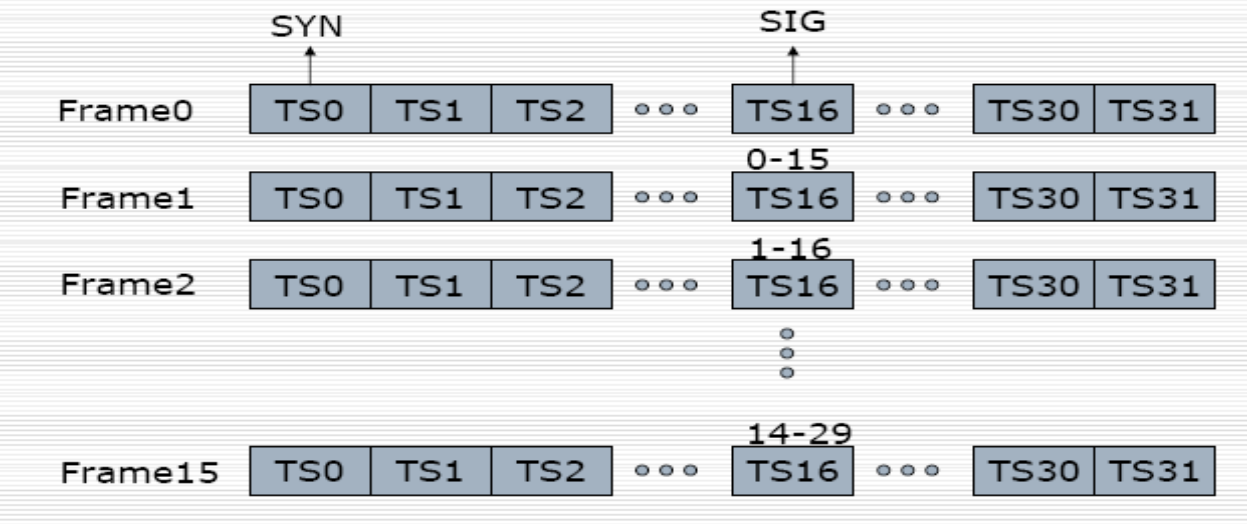

Common Channel Signaling (CCS):

- Common Channel Signaling uses a separate common channel for passing control signals for a group of trunks or information paths as it does not use the speech or the data path for signaling. The common channel signaling consists of two types of nodes such as Signaling Transfer Points (STP) and Signaling Points (SP).

- A Signaling point is capable of handling control messages directly addressed to it but is incapable of routing messages. Signaling transfer point is capable of routing messages and can perform the functions of SP.
- This common channel signaling is implemented in two modes −
    - Channel associated mode
    - Channel non-associated mode
- **Channel-associated Mode:**
- In the channel-associated mode, the channel closely tracks the trunk groups along the entire length of the connection. Here, the signaling is done on a separate channel; the signaling path passes through the same set of switches, as does the speech path.
- The following figure shows the associated mode of operation in common channel signaling. In figure straight line indicates speech or information path , dashed line indicates signaling path.

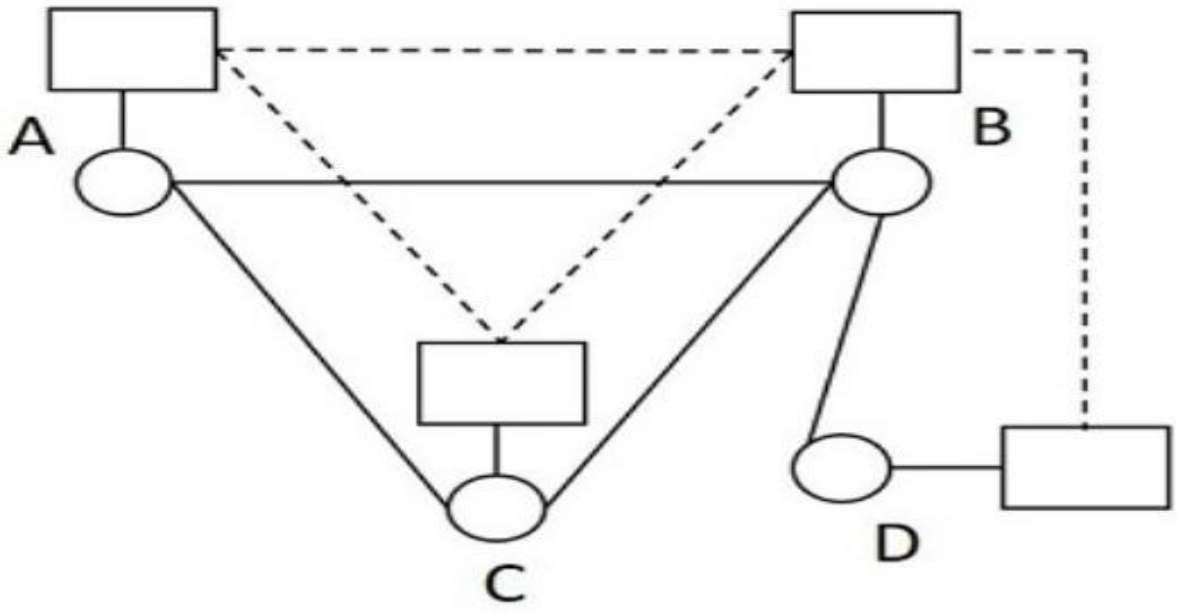

- The signaling paths for the speech paths A-B, A-C-B and B-D are A-B, A-C-B and B-D respectively. The advantages of this signaling are −
    - The implementation is economic
    - The assignment of trunk groups is simple

- **Channel Non-associated Mode**
- In the channel non-associated mode, there is no close or simple assignment of the control channels to trunk groups. It follows a different path from that of the speech signal as shown in the following figure.

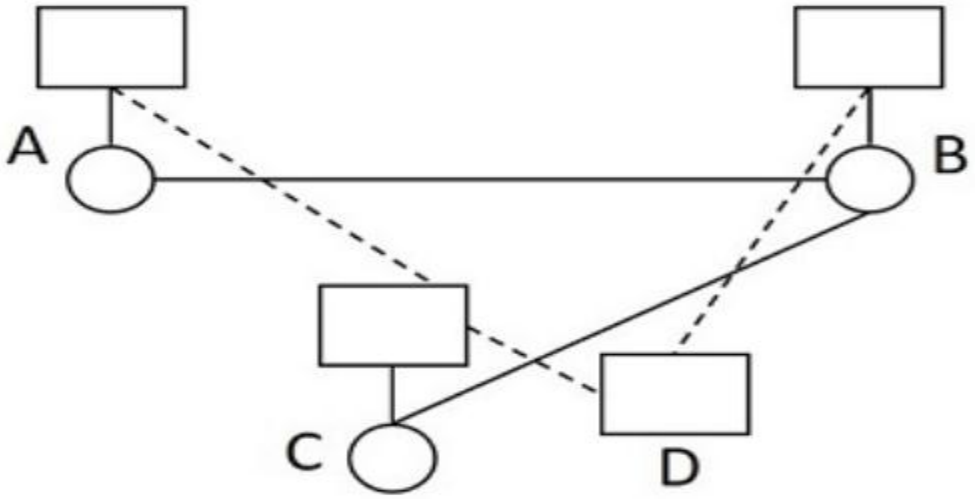

- The signaling paths for the speech paths A-B and B-C are A-C-D-B and B-D-C respectively. The network topologies are different for signaling and speech networks.
- Though this scheme offers flexibility as there is no switching center, it is a bit complex, as the signal messages may be transferred between the two end switching systems via any available path in the common channel signaling network according to its own routing principles.
- **Basic scheme for Common Channel Signaling**
- Signaling is completely separate from switching and speech transmission.
- Dedicated channels for signaling are used to support a group of circuits.
- The CCS network is basically a store and forward (S&F) network where signaling information travels on a link-by-link basis along the route.
- The below figure shows Basic scheme for Common Channel Signaling

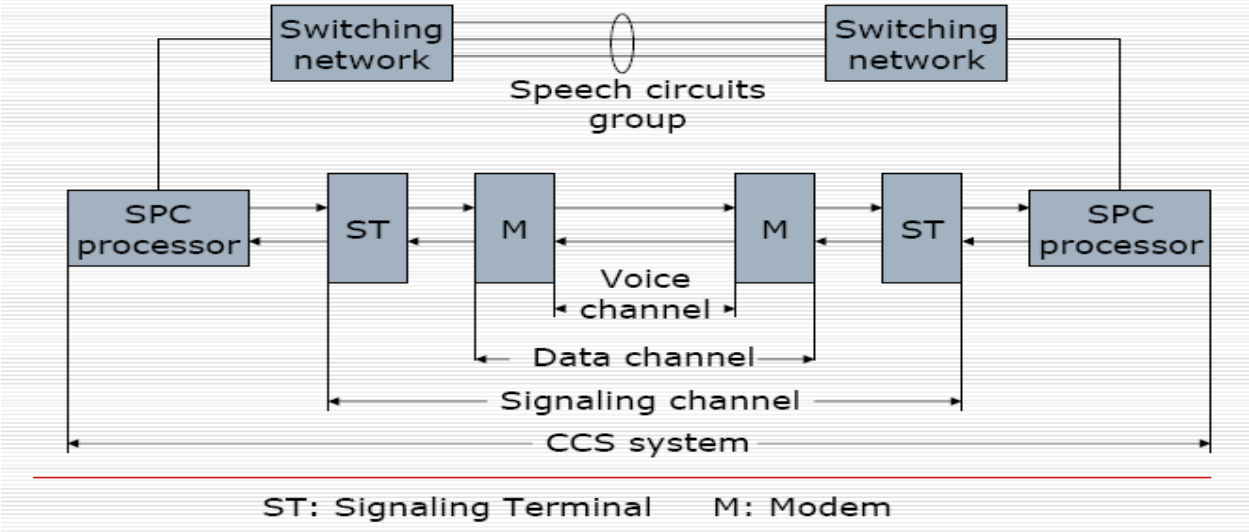

- **CCS signaling message formats**
- SU: signaling unit of fixed length.
- SUM: single unit message
  - A message of one signal unit length.

Header	Signaling Information	Circuit label	Error Check

- MUM: multiunit message
  - A message with multiple signal units

Header	Signaling Information	Circuit label	Error Check
Sub header	Length	Other sig~	Error Check
Sub header	Length	Address digits	Error Check

4.8 CCITT Signaling System no.6

- CCITT signaling system no.6 is the first system to be standardized internationally and are designed to use in analog networks.
- This system uses fixed size signal unit (SU). Each SU is of 28 bits among which, 20 are information bits and remaining 8 are parity check bits.
- The bit rate ranges from 2.4 k bits/sec to 4.8 k bits/sec.
- A subsequent edition of this system can be used in digital system by adding 4 padding bits that are used, to matched with the 8-bit PCM time slots.
- Thus, this system have been replaced by CCITT signaling system number 7.

4.9 CCITT Signaling System no.7

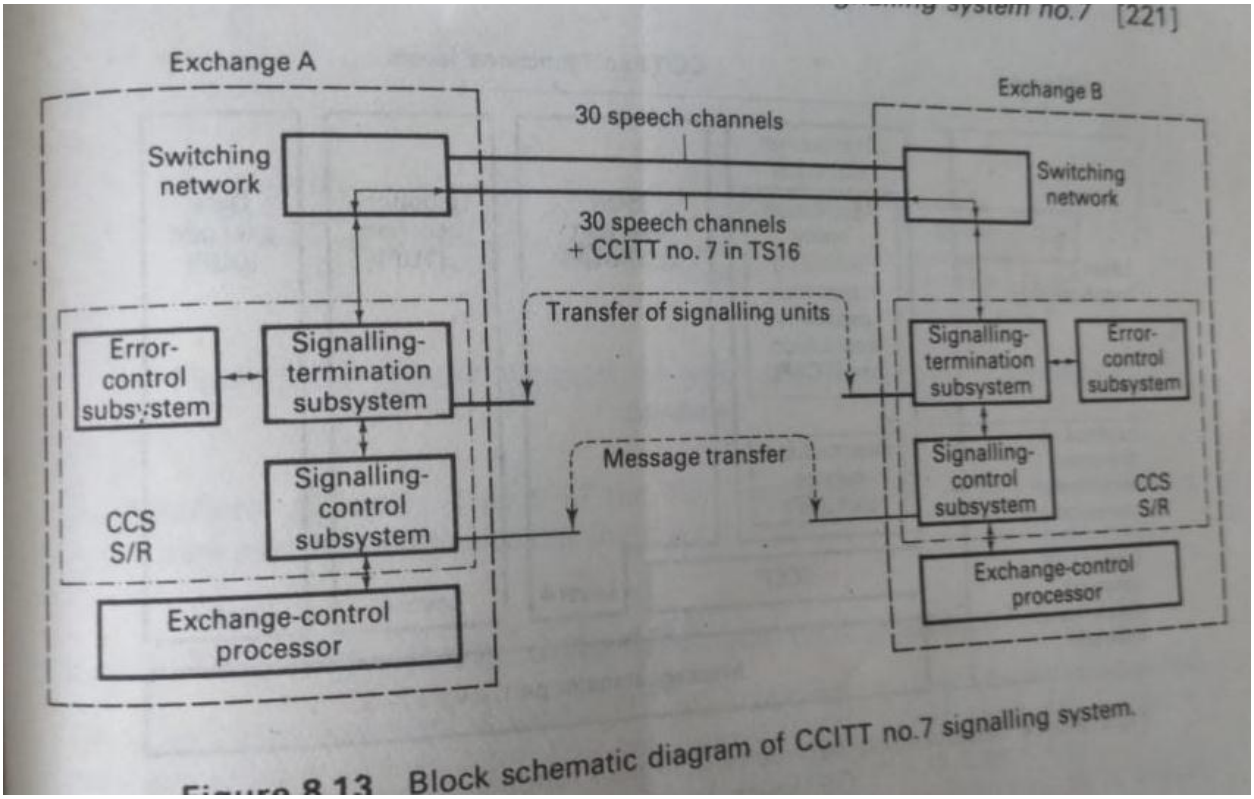

Block schematic diagram of CCITT no.7 signalling system.

- A block schematic diagram of the CCITT no.7 signaling system is shown in above figure.
- Signal messages are passed from the central processor of the sending exchange to the CCS system.
- This consists of three microprocessor based subsystems: the signaling control subsystem, the signaling termination subsystem and the error control subsystem.

- The signaling control subsystem structures the messages in the appropriate format and queues them for transmission.
- When there are no messages to send , it generates filler messages to keep the link active. Messages then pass to the signaling termination subsystem, where complete signal units (SU) are assembled using sequence number and check bits generated by the error control subsystem.

At the receiving terminal, the reverse sequence is carried out.

Architecture of SS7:

- The concept of common channel signaling has been further expanded in SS7 which was first defined in1980, revised in1984 and 1988.
- SS7 has been designed to be an open ended CCS standard that can be used over a variety of digital circuit switched networks.
- The functions in SS7 are defined assuming packet switched operation.
- Primarily optimized to work with digital SPC exchanges utilizing 64kbps digital channels.
- The protocol architecture of SS7 has four levels as shown in below figure.
- The lower three levels referred to as the **message transfer part (MTP)** provide a reliable service for routing messages through the SS7 network.
- The lowest layer signaling data link is concerned with the physical and electrical characteristics of the signaling links between STPs, between STPs and SPs.
- The main purpose of the second layer signaling link is to turn a potentially unreliable physical link into a reliable data link.

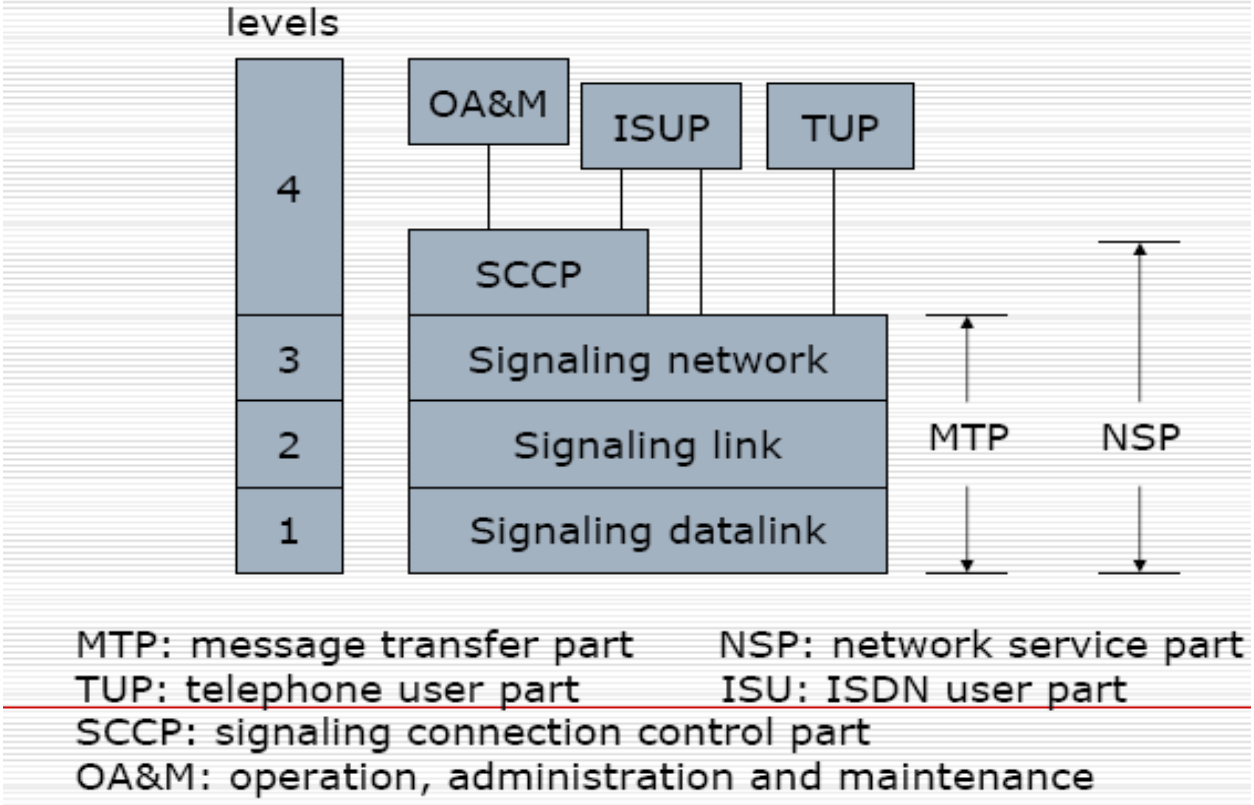

- The top level of the MTP, referred to as the signaling network level, function provides for routing data across multiple STPs from control source to control destination.
- The signaling connection control part (SCCP) and MTP together are referred to as the **network service part (NSP).**
- The main purpose of **SCCP** is to enhance the limited routing, distribution and addressing capabilities of the third layer.
- **The ISDN user part (ISUP)** provides for the control signaling needed in an ISDN to deal with ISDN subscriber calls and related functions.
- The **Telephone user part (TUP)** is invoked in response to actions by a subscriber at a telephone. The control signaling associated with TUP deal with establishment, maintenance and termination of telephone calls.
- **The Operation, Maintenance and Administration Part (OMAP)** specifies network management functions and messages related to operations and maintenance
- **Signaling units of SS7**
- Three types of signaling units
    - MSU: message signal unit

- LSSU: link status signal unit
- FISU: fill-in signal unit

- Flag bit pattern: '01111110'
  - Used as delimiter for synchronization
  - Only flags can contain six 1's

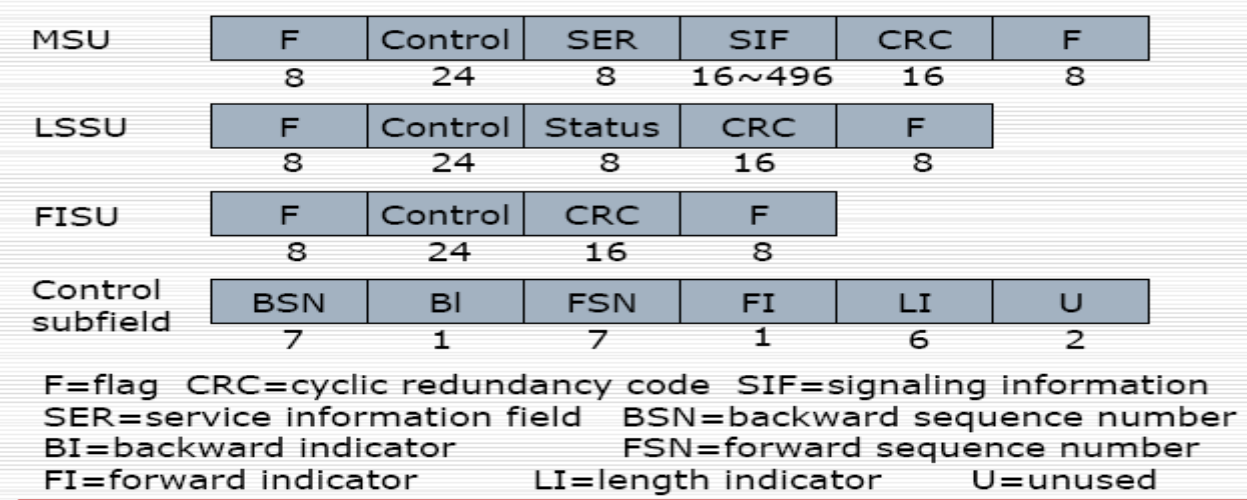

IN-CHANNEL	COMMON-CHANNEL
• Trunks are held up during signalling	• Trunks are not required for signaling
• Interference between Voice and Control Signals may occur	• No interference since the voice and control channels are separate
• Separate signaling equipment is required in each trunk hence expensive	• Only one set of signaling equipment is required for a large group of trunk circuits hence economical
• Can be misused by customers since it is easy to mimic voice signaling	• Control channel is in-accessible to users
• Signalling is relatively slow	• Signalling is much faster
• Speech circuit continuity is assured when signaling is received	• State of speech circuit not automatically assured
• It is difficult to change or add signals	• There is flexibility to add or change signals

4.10 Packet Switching

- Connectionless services are implemented using a technique known as packet switching. This method also permits virtual connection of huge number of data users to a common physical channel in the network. Hence, this method is also called as virtual switching.
- In packet switching, long messages are split into a number of short ones, called packets, which are transmitted separately as shown in below figure.
- Thus, the single packet from the VDU operator is sent between packets of the large computer file, instead of waiting until its transmission is complete and the delay is minimized.

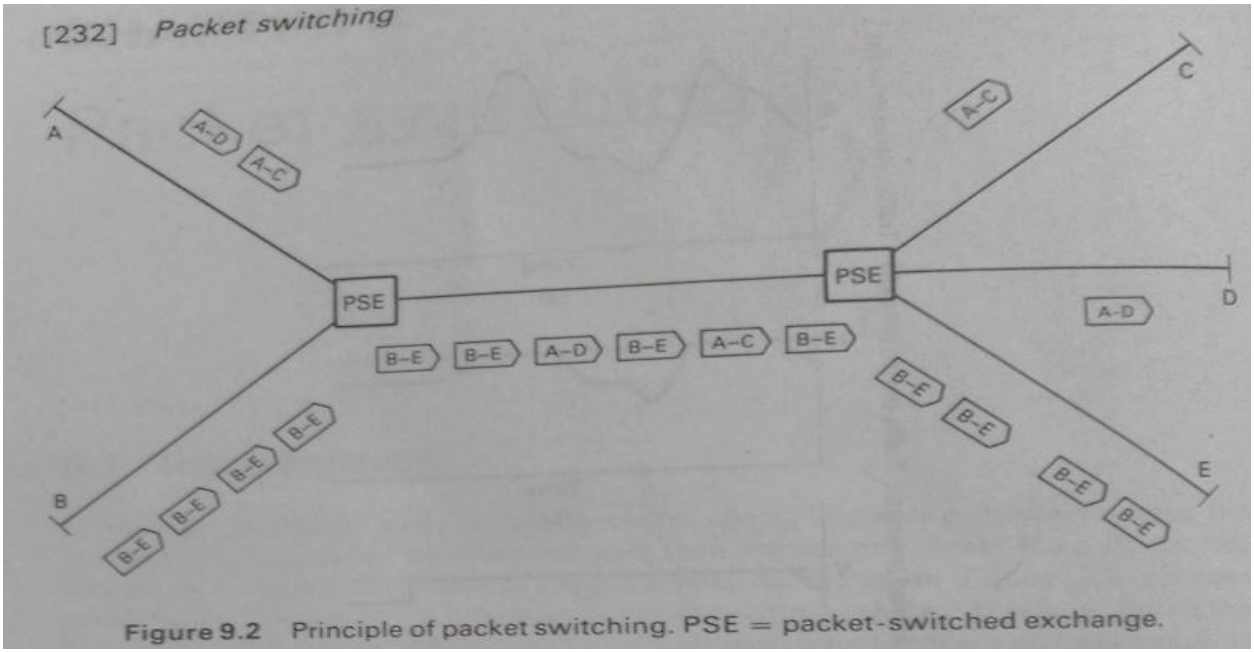

Figure 9.2 Principle of packet switching. PSE = packet-switched exchange.

- The format of a typical packet is shown in below figure.
- Since each packet is handled as a complete message, its data must be preceded by a header, which contains the destination address of the message.
- It is possible for packets some times to arrive at their destination in a different order from that in which they are sent.
- Each header therefore contains a sequence number to enable packets to be reassembled in the correct order at the receiving terminal.
- Other bits are added to the header for control purposes. The packet ends with bits added for error detection and correction.

- The most popular error detection technique uses a cyclic redundancy check code (CRC)

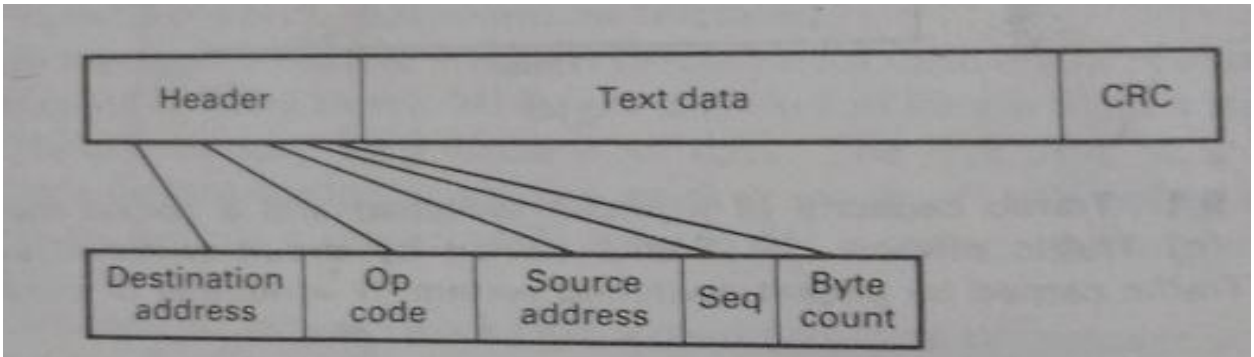

Figure 9.3 Typical packet format.

- If the receiving terminal is to obtain correction of errors by requesting retransmission of a packet, then its header must contain the address of the sending terminal.
- If packets can vary in length, the receiving terminal must be able to know when it has received the complete packet.
- The length of the packet is therefore also included in the header.
- Packet switching was first developed for use in private data networks. It is widely used in local area networks (LANs), for data transmission within a single site or building.
- Packet switching is also used in wide area networks (WANs), for data transmission between different sites of an organization.

4.11 Statistical Multiplexing

- The multiplexing, in which the increase in number of terminals served by data link is obtained by sending message in packet is referred to as statistical multiplexing or statmux or intelligent multiplexer.
- In a single trunk, the terminal traffic is concentrated by this multiplexer
- Even though each terminal generates information randomly, some may try to send at the same time. So statistical multiplexer consists of buffer store for queueing messages for transmission.
- Delay limits the number of terminals so statmux is a single server queueing system whose packets must be less than one erlang of traffic.
- When the buffer is full, the multiplexer sends a signal to its terminals to stop them from sending.

- Let k bit/sec are transmitted by a data link which produce m bits/sec in active, then n=k/m for synchronous TDM.
- If 'a' is a fraction for which the terminal is active , then 'ám' is the mean digit rate per terminal. Delay limits the occupancy of the data link to b then k=nma/b

$$N=(k/m)\ (b/a)$$

- Statistical multiplexer can serve more terminals if activity 'a' is low
- The time taken to send a packet from a single trunk is mean holding time h. it is given as, h=p/k
  - p-average number of bits per packet
  - k- availability of the trunks
- Occupancy of the trunk 'A', when packet arrive at λ rate is

$$A=\lambda p/k \text{ Erlang}$$

- Mean queueing delay is

$$\bar{T}_q = \frac{Ah}{1-A} = \frac{\lambda(p/k)^2}{1-\lambda p/k}$$

The mean interval between a packet arriving from a terminal and its transmission being completed is

$$\bar{T} = \bar{T}_q + h = \frac{\lambda(p/k)^2}{1-\lambda p/k} + \frac{p}{k}$$

$$= \frac{1}{(k/p)-\lambda} \qquad (9.1)$$

4.12 Broadband networks

ATM (Asynchronous Transfer Mode) Switches:

- The basic function of an ATM switch are shown in below figure.
- A space switch is required to route calls from an incoming trunk I_j to an outgoing trunk O_k

- The incoming header H_i must be changed to an outgoing header H_o , which is required to operate the next switching node in the connection
- Several cells for the same outgoing trunk may arrive simultaneously on different incoming trunks. To prevent loss of cells, queues must be provided.

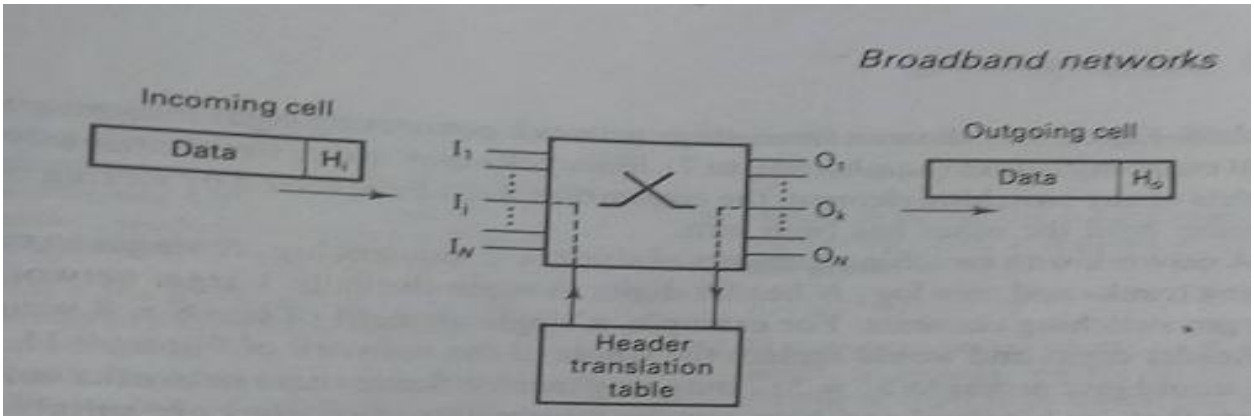

Figure 9.10 Principle of ATM switch.

- Thus, the function to be provided by an ATM switch are:
  - Call routing (by space switching)
  - Header translation
  - Queuing
- Several different switching architectures have been proposed, based on different queuing methods and different basic switching elements. One multistage switch is shown in below figure. This is called a delta switch and it has a self-routing ability.
- Its network is called a banyan network because its shape resembles the tropical tree of that name.
- There is only one path through the network from an incoming trunk to each outgoing trunk.
- Each switching element has two inlets and two outlets.
- The outlet chosen at each stage is determined by one digit in the header of a cell.
- If this digit is 0 the upper outlet is chosen. If it is 1, the lower outlet is chosen.
- Thus, successive bits in the header route the cell through the switching stages until the required outgoing trunk is reached.

- Below figure shows a three stage network connecting eight incoming trunks to eight outgoing trunks (numbered 0 to 7).
- Since cell may arrive simultaneously at the two inlets of any switching element, the contention must be resolved by storing one cell in a buffer until the other has been sent.

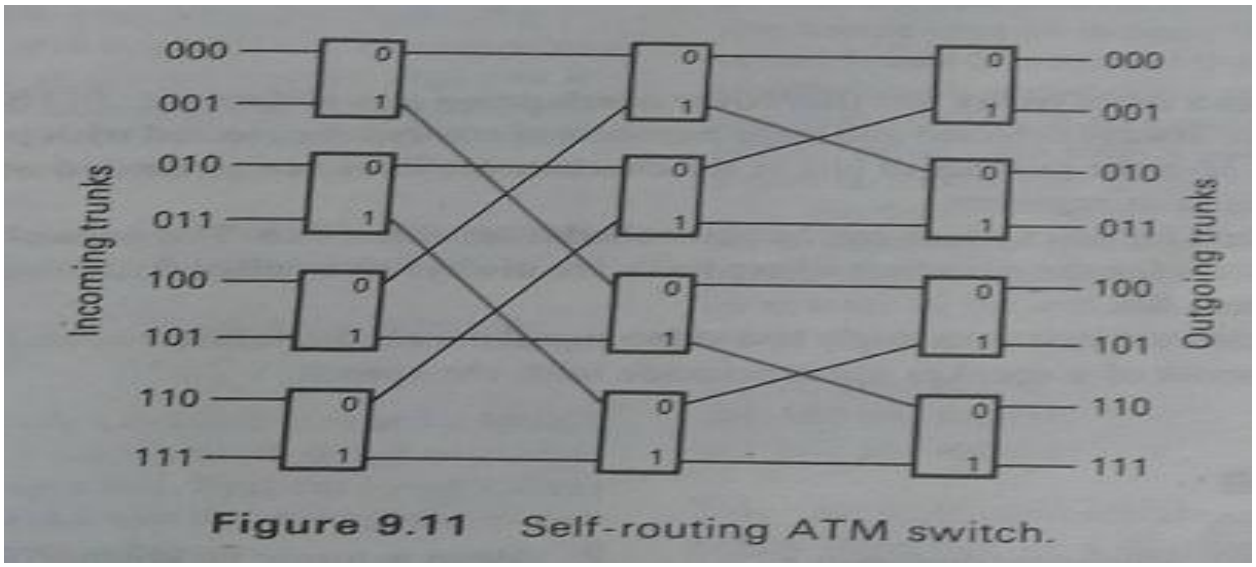

Figure 9.11 Self-routing ATM switch.

IMPORTANT QUESTIONS

1. Describe the major components of a telephone network.
2. Explain in detail the Subscriber loop system.
3. Explain Subscriber loop interface using Balanced circuit and Two-wire-to-four wire transformer hybrid.
4. Explain about Switching Hierarchy and Routing.
5. Explain about Transmission Plan
6. With examples explain the national and international numbering plans.
7. Discuss different charging plans for a Telecommunication Service.
8. Briefly explain the three form of signaling techniques
9. Briefly explain In channel signaling..
10. Write about modes of operation of Common channel Signaling.
11. Explain the differences between In channel and Common Channel Signaling Schemes.
12. Draw and explain block schematic diagram of CCITT signalling system No.7. and Explain the Architecture of SS7.
13. Explain the Packet Switched Networks with the help of diagrams.
14. Explain ATM (Asynchronous Transfer Mode) Switches