GOVERNMENT OF ANDHRA PRADESH

STATE BOARD OF TECHNICAL EDUCATION AND TRAINING

Andhra Pradesh :: AMARAVATI



Globally Competitive

CURRICULUM (C-20)

For Polytechnic Diploma Courses in Andhra Pradesh



3 ½ YEAR (SW)
DIPLOMA IN

BIO-MEDICAL ENGINEERING

CURRICULUM -2020
(C-20)

3 ½ YEAR (SANDWICH)
DIPLOMA IN
BIO-MEDICAL ENGINEERING

STATE BOARD OF TECHNICAL EDUCATION AND TRAINING
ANDHRA PRADESH :: AMARAVATI

CURRICULUM- C 20

FOR

DIPLOMA PROGRAMMES OF SBTET,AP

PREAMBLE

The proposed programme intends to develop a skilled technician to support the industries both nationally or globally. It also helps to kindle the spirit of entrepreneurship with necessary skills and theoretical inputs aligning with the National policy of 'Make in India'. The programme also provides for accomplishing higher education goals for those who wish to enrich their theoretical concepts further.

The State Board of Technical Education and Training, (SBTET) AP, has been offering Diploma programmes to meet the above said aspirations of the stake holders: industries, students, academia, parents and the society at large. As such, it has been the practice of SBTET, A.P., to keep the curriculum abreast with the advances in technology through systematic and scientific analysis of current curriculum and bring out an updated revised version at regular intervals. Accordingly the SBTET, AP under the aegis of the Department of Technical Education, Andhra Pradesh in it is 57th Board Meeting held on 05-02-2019 (vide item no: 18) resolved to update the Polytechnic Curriculum C-16 with the guidance of National Institute of Technical Teachers Training & Research (NITTTR), Extension Centre, Vijayawada (ECV), to be implemented with effect from the academic year '20-21'.

Analysis of Curriculum C-16 (SWOT analysis) started in the month of June-2019. Feedback was collected from all stake holders: Students, Lecturers, Senior Lecturers, Head of Sections and Principals for all programmes for this purpose. A series of workshops with subject experts followed in the subsequent weeks and the draft curricula were prepared for every programme. Finally, an interactive session with representatives from industries, academia and subject experts was held on 04.01.2020 for thorough perusal and critique of draft curricula; and the suggestions received from Industrialists and academia have been recorded , validated by another set of experienced subject teachers from the Department of Technical education for incorporation into the Curriculum C-20.

The design of new Curricula for the different diploma programmes has thus been finalised with the active participation of the members of the faculty teaching in the Polytechnics of Andhra Pradesh, and duly reviewed by Expert Committee constituted of academicians and representatives from industries. Thus, the primary objective of the curriculum change is to produce employable technicians in the country by correlating the growing needs of the industries with relevant academic input.

The outcome based approach as given by NBA guidelines has been followed throughout the design of this curriculum is designed to meet the requirements of NBA Accreditation, too.

The revised New Curriculum i.e., Curriculum–2020 (C-20) is approved by BoG of SBTET for its implementation with effect from 2020-21.

Highlights of Curriculum C-20:

1. Duration of course for regular Diploma and for sandwich Diploma is 3 years and 3½ years respectively.
2. The Curriculum is prepared in Semester Pattern. However, First Year is maintained as Year-wise pattern.
3. 6 Months Industrial training has been introduced for 3 years Diploma Courses and 6 months Industrial Training is introduced for 3 ½ years Sandwich Diploma courses.
4. Updated subjects relevant to the industry are introduced in all the Diploma courses.
5. CISCO course content has been incorporated into the ECE and CME programmes for certification from CISCO in lieu of industrial training when students are unable to get Industrial Training placement in any industry.
6. The policy decisions taken at the State and Central level with regard to environmental science are implemented by including relevant topics in Chemistry. This is also in accordance with the Supreme Court guidelines issued in Sri Mehta's case.
7. Keeping in view the increased need of communication skills which is playing a major role in the success of Diploma Level students in the Industries, emphasis is given for learning and acquiring listening, speaking, reading and writing skills in English. Further as emphasized in the meetings, Communication Skills lab and Life Skills lab are continuing for all the branches.
8. CAD specific to the branch has been given emphasis in the curriculum. Preparing drawings using CAD software has been given more importance.
9. Upon reviewing the existing C-16 curriculum, it is found that the theory content is found to have more weightage than the Practical content. In C-20 curriculum, more emphasis is given to the practical content in Laboratories and Workshops, thus strengthening the practical skills.
10. With increased emphasis for the student to acquire Practical skills, the course content in all the subjects is thoroughly reviewed and structured as outcome based than the conventional procedure based.
11. Curricula of Laboratory and Workshops have been thoroughly revised based on the suggestions received from the industry and faculty, for better utilization of the equipment available in the Polytechnics. The experiments /exercises that are chosen for the practical sessions are identified to confirm to the field requirements of industry.
12. An exclusive section for assessing Higher order Thinking skills (HOTS) has been introduced in summative evaluation.

Acknowledgements:

It is pertinent to acknowledge the support of the following in the making of Curriculum C-20.

A series of workshops in three phases were conducted by NITTTR, AP Extension Centre, Vijayawada involving faculty from Polytechnics, Premier Engineering Colleges & Industries to analyze the Previous C-16 Curriculum and to design C-20 Curriculum under the guidance of Dr C. R. Nagendra Rao, Professor & Head, NITTTR-ECV. The efforts & support extended by NITTTR to bring out final Curriculum C-20 by incorporating needs, aspiration & expectations of all stake holders is highly appreciated and gratefully acknowledged.

The Members of the working group are grateful to Sri M.M. Nayak, I.A.S., Special Commissioner of Technical Education,Chairman of SBTET, AP,Dr. Pola Bhaskar ,I.A.S Special Commissioner of Technical Education,Chairman of SBTET, AP and Sri. G. Anantha Ramu, I.A.S., Principal Secretary, Department of Skill Development and Training for their guidance and valuable inputs during process of revising, modifying and updating the Curriculum C-20.

The Members acknowledge with thanks the guidance & inspiration provided by Sri. V.S. Dutt, Secretary, SBTET, Andhra Pradesh and other officials of Directorate of Technical Education and the State Board of Technical Education, Andhra Pradesh, experts from industry, academia from the universities and higher learning institutions and all teaching fraternity from the Polytechnics who are directly or indirectly involved in preparation of the curricula.

RULES AND REGULATIONS OF C-20 CURRICULUM

1 DURATION AND PATTERN OF THE COURSES

All the Diploma programs run at various institutions are of AICTE approved 3 years or 3½ years duration of academic instruction.

All the Diploma courses are run on year wise pattern in the first year, and the remaining two or two & half years are run in the semester pattern. In respect of few courses like Diploma in Bio-Medical course, the training will be in the seventh semester. Run-through system is adopted for all the Diploma Courses, subject to eligibility conditions.

2 PROCEDURE FOR ADMISSION INTO THE DIPLOMA COURSES:

Selection of candidates is governed by the Rules and Regulations laid down in this regard from time to time.

a) Candidates who wish to seek admission in any of the Diploma courses will have to appear for the Common Entrance Test for admissions into Polytechnics (POLYCET) conducted by the State Board of Technical Education and Training, Andhra Pradesh, Vijayawada.

Only the candidates satisfying the following requirements will be eligible to appear for the Common Entrance Test for admissions into Polytechnics (POLYCET).

b) The candidates seeking admission should have appeared for S.S.C examination, conducted by the Board of Secondary Education, Andhra Pradesh or equivalent examination thereto, at the time of applying for the Common Entrance Test for admissions into Polytechnics (POLYCET). In case of candidates whose results of their Qualifying Examinations is pending, their selection shall be subject to production of proof of their passing the qualifying examination in one attempt or compartmentally at the time of admission.

c) Admissions are made based on the merit obtained in the Common Entrance Test (POLYCET) and the reservation rules stipulated by the Government of Andhra Pradesh from time to time.

d) For admission into the following Diploma Courses for which entry qualification is 10+2, candidates need not appear for POLYCET. A separate notification will be issued for admission into these courses.

i). D.HMCT ii).D. Pharmacy

3 MEDIUM OF INSTRUCTION

The medium of instruction and examination shall be English.

4 PERMANENT IDENTIFICATION NUMBER (PIN)

A cumulative / academic record is to be maintained of the Marks secured in sessional work and end examination of each year for determining the eligibility for promotion etc., A Permanent Identification Number (PIN) will be allotted to each admitted candidate to maintain academic records.

5 NUMBER OF WORKING DAYS PER SEMESTER / YEAR:

a) The Academic year for all the Courses shall be in accordance with the Academic Calendar.
b) The Working days in a week shall be from Monday to Saturday
c) There shall be 7 periods of 50 minutes duration each on all working days.
d) The minimum number of working days for each semester / year shall be 90 / 180 days excluding examination days. If this prescribed minimum is not achieved due to any reason, special arrangements shall be made to conduct classes to complete the syllabus.

6 ELIGIBILITY (ATTENDANCE TO APPEAR FOR THE END EXAMINATION)

a) A candidate shall be permitted to appear for the end examination in all subjects, if he or she has attended a minimum of 75% of working days during the year/Semester.
b) Condonation of shortage of attendance in aggregate up to 10% (65% and above and below 75%) in each semester or 1st year may be granted on medical grounds.
c) A stipulated fee shall be payable towards condonation for shortage of attendance.
d) Candidates having less than 65% attendance shall be detained.
e) Students whose shortage of attendance is not condoned in any semester / 1st year and not paid the condonation fee in time are not eligible to take their end examination of that class and their admissions shall stand cancelled. They may seek re-admission for that semester / 1st year when offered in the next subsequent academic semester/year.
f) For INDUSTRIAL TRAINING:
    i) During Industrial Training the candidate shall put in a minimum of 90% attendance.
    ii) If the student fails to secure 90% attendance during industrial training, the student shall reappear for 6 months industrial training at his own expenses.

7 READMISSION

Readmission shall be granted to eligible candidates by the respective Principal/ Regional Joint Director.

a) (i) Within 15 days after commencement of class work in any semester (Except Industrial Training).
(ii) For Industrial Training: before commencement of the Industrial training.
b) Within 30 days after commencement of class work in any year (including D. Pharmacy course or first year course in Engineering and Non Engineering Diploma streams).
Otherwise such cases shall not be considered for readmission for that semester / year and are advised to seek readmission in the next subsequent eligible academic year.
The percentage of attendance of the readmitted candidates shall be calculated from the first day of beginning of the regular class work for that year / Semester, as officially announced by CTE/SBTET but not from the day on which he/she has actually reported to the class work.

8 SCHEME OF Evaluation

a) First Year

THEORY Courses: Each Course carries Maximum marks of 80 with examination of 3 hours duration, along with internal assessment for Maximum of 20 marks. (Sessional marks). However, there are no minimum marks prescribed for sessionals.

Laboratory Courses: There shall be 40 Marks for internal assessment i.e. sessional marks for each practical Course with an end examination of 3 hours duration carrying 60 marks. However, there are no minimum marks prescribed for sessionals.

b) III, IV, V, VI and VII Semesters:

THEORY Courses: End semester evaluation shall be of 3 hours duration and for a maximum of 80 marks.

Laboratory Courses: Each Course carry 60/30 marks of 3hours duration 40/20 sessional marks.

9 INTERNAL ASSESSMENT SCHEME

a) **Theory Courses**: Internal assessment shall be conducted for awarding sessional marks on the dates specified. **Three unit tests shall be conducted for I year students and two Unit Tests for semesters.**

Internal Assessment shall be of 90 minutes duration and for a maximum of 40 marks. For each test

The average of marks of all the tests, reduced to 20 shall be taken as final sessional in any case.

b) **Practical Courses**:

(i) **Drawing Courses:**

The award of sessional marks for internal Assessment shall be as given in the following table

Distribution of Marks for the Internal Assessment Marks			
First Year (Total:40 Marks)		**Semesters (Total:40 Marks)**	
Max:20 Marks	Max:20 Marks	Max:20 Marks	Max:20 Marks
From the Average of THREE Unit Tests.	From the Average of Assessment of Regular Class work Exercises.	From the Average of TWO Unit Tests.	From the Average of Assessment of Regular Class work Exercises.

- For first year engineering drawing each unit test will be conducted for a duration of two hours with maximum marks of 40
- Part – A : 4 questions x 5 marks = 20 marks; part – B: 2questions x 10 marks = 20 marks
- For the semester drawing examinations, two unit tests shall be conducted as per the board end examination question paper pattern.
- All Drawing exercises are to be filed in **serial order** and secured for further scrutiny by a competent authority

(ii) Laboratory Courses:

Student's performance in Laboratories / Workshop shall be assessed during the year/ semester of study for 40 marks in each practical Course.

Evaluation for Laboratory Courses, other than drawing courses:

i. Instruction (teaching) in laboratory courses (except for the course on Drawing) here after shall be task/competency based as delineated in the Laboratory sheets, prepared by SBTET, AP & NITTTR- ECV and posted in SBTET website.

ii. Internal assessment for Laboratory shall be done on the basis of tasks performed by the student as delineated in the laboratory sheets, prepared by SBTET, AP & NITTTR- ECV and posted in AP, SBTET website.

iii. Question paper for End semester Evaluation shall also be taskbased and shall be prepared and distributed by SBTET as done in case of theory courses be prepared as per SBTET rules in vogue.

c) Internal assessment in Labs / workshops / Survey field work etc., during the course of study shall be done and sessional marks shall be awarded by the concerned Teacher. 50% of total marks for the Course shall be awarded based on continuous assessment of the student in laboratory/workshop classes and the remaining 50% shall be based on the sum of the marks obtained by the students in two tests.

d) For practical examinations, except in drawing, there shall be two examiners. External examiner shall be appointed by the Principal in consultation with respective Head of Section preferably choosing a qualified person from in the order of preference.

i) Nearby Industry

ii) Govt / Semi Govt organization like R & B, PWD, PR, Railways, BSNL,APSRTC,APSEB etc.,

iii) Govt / University Engg College.

iv) HoDs from Govt.Polytechnic

Internal examiner shall be the person concerned with internal assessment as in (c) above. The end examination shall be held along with all theory papers in respect of drawing.

e) Question Paper for Practicals: Question paper should cover (the experiments / exercise prescribed to test various) skills like handling, manipulating, testing, trouble shooting, repair, assembling and dismantling etc., from more than one experiment / exercise.

f) Records pertaining to internal assessment marks of both theory and practical Courses are to be maintained for official inspection.

g) **In case of Diploma programs *having* Industrial Training, Internal Assessment and Summative Evaluation**, shall be done as illustrated in the following table:

Assessment no	Upon completion of	By	Based on	Max Marks
1	12 weeks	1.The faculty concerned and 2. Training Mentor of the industry	Learning outcomes as given in the scheme of assessment ,for Industrial Training	120
2	20-22 weeks			120
3.Final summative Evaluation	23 week	1.The faculty member concerned, 2.HoD concerned and 3.An external examiner	1.Demonstration of any one of the skills listed in learning outcomes	30
			2.Training Report	20
			3.Viva Voce	10
			TOTAL	**300**

h) Each teacher shall be assigned a batch of students of 10- 15 for industrial training irrespective of placement for training

10 MINIMUM PASS MARKS

THEORY EXAMINATION:

For passing a theory Course, a candidate has to secure a minimum of 35% in end examination and a combined minimum of 35% of both Sessional and end examination marks put together.

PRACTICAL EXAMINATION:

For passing a practical Course, a candidate has to secure a minimum of 50% in end examination and a combined minimum of 50% of both sessional and practical end examination marks put together. In case of D.C.C.P., the pass mark for typewriting and short hand is 45% in the end examination. There are no sessional marks for typewriting and Shorthand Courses of D.C.C.P course.

INDUSTRIAL ASSESSMENT:

Pass marks is 50% in assessment at Industry (I and II assessments put together) and also 50% in final summative assessment at institution level.

11. PROVISION FOR IMPROVEMENT

Improvement is allowed only after he / she has completed all the Courses from First Year to Final semester of the Diploma.

a) Improvement is allowed in any 4 (Four) Courses of the Diploma.
b) The student can avail of this improvement chance **ONLY ONCE**, that too within the succeeding two examinations after the completion of Diploma. However, the duration including Improvement examination shall not exceed **FIVE** years from the year of first admission.
c) No improvement is allowed in Practical / Lab Courses or Project work or Industrial Training assessment. However, improvement in drawing Course(s) is allowed.
d) If improvement is not achieved, the marks obtained in previous Examinations hold good.
e) Improvement is not allowed in respect of the candidates who are punished under Mal-practice in any Examination.
f) Examination fee for improvement shall be paid as per the notification issued by State Board of Technical Education and Training from time to time.
g) All the candidates who wish to appear for improvement of performance shall deposit the original Marks Memos of all the years / Semesters and also original Diploma Certificate to the Board. If there is improvement in performance of the current examination, the revised Memorandum of marks and Original Diploma Certificate will be issued, else the submitted originals will be returned.

12. RULES OF PROMOTION FROM 1ST YEAR TO 3,^{rd,} 4,th 5th ,6th and 7th SEMESTERS:

A) For Diploma Courses of 3 Years duration

i. A candidate shall be permitted to appear for first year examination provided he / she puts in 75% attendance (which can be condoned on Medical grounds upto 10%) i.e. attendance after condonation on Medical grounds should not be less than 65% and pay the examination fee.

ii. A candidate shall be promoted to 3rd semester if he/she puts the required percentage of attendance in the first year and pays the examination fee. A candidate who could not pay the first year examination fee has to pay the promotion fee as prescribed by State Board of Technical Education and Training, AP from time to time before commencement of 3rd semester.

iii. A candidate shall be promoted to 4th semester provided he/she puts the required percentage of attendance in the 3rd semester and pay the examination fee. A candidate, who could not pay the 3rd semester exam fee, has to pay the promotion fee as prescribed by State Board of Technical Education and Training AP from time to time before commencement of 4th semester.

A candidate is eligible to appear for the 4th semester examination if he/she

a) Puts the required percentage of attendance in the 4th semester
b) Should not have failed in more than four Courses in 1st year.

<u>For IVC & ITI Lateral Entry Students:</u>

a) A candidate is eligible to appear for the 4th semester examination if he/she puts the required percentage of attendance in the 4th semester
b) A candidate is eligible to appear for the 4th semester examination if he/she clears at least two Courses in third semester.

iv) A candidate shall be promoted to 5th semester provided he / she puts the required percentage of attendance in the 4th semester and pays the examination fee. A candidate, who could not pay the 4th semester examination fee, has to pay the promotion fee as prescribed by State Board of Technical Education and Training from time to time before commencement of 5th semester.

A candidate is eligible to appear for the 5th semester examination if he/she

a) Puts the required percentage of attendance in the 5th semester
b) Should get eligibility to appear for 4th Semester examination.

The first backlog exam in 5th semester will be conducted only in instant/supplementary diploma examination.

For IVC& ITI Lateral Entry students:

a) Puts the required percentage of attendance in the 5th semester
b) Should get eligibility to appear for 4th Semester examination.

v) A candidate shall be sent to Industrial training provided he/she puts in the required percentage of attendance in the 4th semester and pay the examination fee/ promotion fee as prescribed by SBTET.

A candidate is eligible to appear for Industrial Training assessment (Seminar/Viva-voce)

a) Puts the required percentage of attendance, ie., 90% in 6th semester Industrial Training.

For IVC & ITI Lateral Entry students:

a) Puts the required percentage of attendance, ie., 90% in 6th semester Industrial Training.
b) Should get eligibility to appear for 5th Semester Examination.

B) For Diploma Courses of 3 ½ Years duration (MET/ CH/ CHPP/ CHPC/ CHOT/ TT):

i. A candidate shall be permitted to appear for 1st year examination provided he / she puts in 75% attendance (which can be condoned on Medical grounds up to 10%) i.e. attendance after condonation on Medical grounds should not be less than 65% and pay the examination fee.

ii. A candidate shall be promoted to 3rd semester if he/she puts the required percentage of attendance in the 1st year and pays the examination fee. A candidate who could not pay the 1st year examination fee has to pay the promotion fee as prescribed by State Board of Technical Education and Training from time to time before commencement of 3rd semester.

iii. A candidate shall be promoted to 4th semester provided he/she puts the required percentage of attendance in the 3rd semester and pay the examination fee. A candidate, who could not pay the 3rd semester exam fee, has to pay the promotion fee as prescribed by State Board of Technical Education and Training from time to time before commencement of 4th semester.

A candidate is eligible to appear for the 4th semester exam if he/she

a). Puts the required percentage of attendance in the 4th semester
b). Should not have failed in more than Four backlog Courses of 1st year.

For IVC & ITI Lateral Entry students:

a) Puts the required percentage of attendance in the 4th semester

iv. A candidate shall be promoted to 5th semester industrial training provided he / she puts the required percentage of attendance in the 4th semester and pays the examination fee. A candidate, who could not pay the 4th semester examination fee, has to pay the promotion fee as prescribed by State Board of Technical Education and Training from time to time before commencement of 5th semester.

v. Promotion from 5th to 6th semester is automatic (i.e., from 1st spell of Industrial Training to 2nd spell) provided he/she puts the required percentage of attendance, which in this case ie.,90 % of attendance and attends for the VIVA-VOCE examination at the end of training.

vi. A candidate shall be promoted to 7th semester provided he / she puts the required percentage of attendance in the 6th semester and pays the examination fee. A candidate, who could not pay the 6th semester examination fee, has to pay the promotion fee as prescribed by State Board of Technical Education and Training from time to time before commencement of 7th semester.

vii. A candidate shall be promoted to 7th semester of the course provided he/she has successfully completed both the spells of Industrial Training.

A candidate is eligible to appear for 7th semester examination if he/she

a)Puts in the required percentage of attendance in the 7th semester

b) Should get eligibility to appear for 4th semester Examination.

For IVC & ITI Lateral Entry students:

a) Puts in the required percentage of attendance in the 7th semester

b) Should not have failed more than four backlog Courses of 3rd Semester

C) For Diploma Courses of 3 ½ Years duration (BM):

The same rules which are applicable for conventional courses also apply for this course. The industrial training in respect of this course is restricted to one semester (6 months) after the 6th semester (3 years) of the course.

i. A candidate shall be permitted to appear for first year examination provided he / she puts in 75% attendance (which can be condoned on Medical grounds upto 10%) i.e. attendance after condonation on Medical grounds should not be less than 65% and pay the examination fee.

ii. A candidate shall be promoted to 3rd semester if he/she puts the required percentage of attendance in the first year and pays the examination fee. A candidate who could not pay the first year examination fee has to pay the promotion fee as prescribed by State Board of Technical Education and Training from time to time before commencement of 3rd semester.

iii. A candidate shall be promoted to 4th semester provided he/she puts the required percentage of attendance in the 3rd semester and pay the examination fee. A candidate who could not pay the 3rd semester examination fee, has to pay the promotion fee as prescribed by State Board of Technical Education and Training from time to time before commencement of 4th semester.

A candidate is eligible to appear for the 4th semester examination if he/she

a) Puts in the required percentage of attendance in the 4th semester

b) Should not have failed in more than Four backlog Courses of 1st year

For IVC & ITI Lateral Entry Students:

A candidate is eligible to appear for the 4th semester examination if he/she puts the required percentage of attendance in the 4th semester

iv. A candidate shall be promoted to 5th semester provided he / she puts the required percentage of attendance in the 4th semester and pays the examination fee. A candidate, who could not pay the 4th semester examination fee, has to pay the promotion fee as prescribed by State Board of Technical Education and Training from time to time before commencement of 5th semester.

A candidate is eligible to appear for the 5th semester exam if he/she

a) Puts in the required percentage of attendance in the 5 th semester.
b) Should get eligibility to appear for 4th Semester examination.

For IVC & ITI Lateral Entry students:

a) Puts in the required percentage of attendance in the 5th semester.
b) Should not have failed in more than Four backlog Courses of 3rd Semester.

v. A candidate shall be promoted to 6th semester provided he/she puts in the required percentage of attendance in the 5th semester and pays the examination fee.

A candidate who could not pay the 5th semester examination fee, has to pay the promotion fee as prescribed by State Board of Technical Education and Training from time to time before commencement of 6th semester.

A candidate is eligible to appear for 6th semester examination

a) Puts in the required percentage of attendance in 6th semester and
b) should get eligibility to appear for 4th Semester Examination.

For IVC & ITI Lateral Entry students:

a) Puts in the required percentage of attendance in 6th semester.
b) Should get eligibility to appear for 5th Semester Examination.

vi. A candidate shall be promoted to 7th semester provided he/she puts in the required percentage of attendance in 6th semester and pay the examination fee. A candidate, who could not pay the 6th semester examination fee, has to pay the promotion fee prescribed by SBTET from time to time before commencement of the 7th semester (Industrial Training).

A candidate is eligible to appear for 7th semester Industrial Training assessment (Seminar/Viva-voce) if he/she

a) Puts in the required percentage of attendance, ie., 90% in 7th semester Industrial Training
b) Should get eligibility to appear for 4th Semester Examination.

For IVC & ITI Lateral Entry students:

a) Puts in the required percentage of attendance, ie., 90% in 7th semester Industrial Training.
b) Should get eligibility to appear for 5th Semester Examination.

Important Note:

Seminar/Viva-voce should not be conducted for Not-Eligible Candidates, till the candidate gets eligibility. However, the record of internal Assessment for Industrial Training for 260 marks shall be maintained at Institution Level for all candidates and the data is to be uploaded only for eligible candidates. For not eligible candidates the data is to be uploaded as and when the candidate gets eligibility.

OTHER DETAILS

a) In case a candidate does not successfully complete the Industrial training, he / she will have to repeat the training at his / her own cost.
b) The First spell of Industrial training shall commence 10 days after the completion of the last theory examination of 4th Semester.
c) The Second spell of Industrial training shall commence within 10 days after the completion of first spell of Industrial training.

13. STUDENTS PERFORMANCE EVALUATION

Successful candidates shall be awarded the Diploma under the following divisions of pass.

a) First Class with Distinction shall be awarded to the candidates who secure an overall aggregate of 75% marks and above.
b) First Class shall be awarded to candidates who secure overall aggregate of 60% marks and above and below 75% marks.
c) Second Class shall be awarded to candidates who secure a pass with an overall aggregate of below 60%.
    i. The Weightage of marks for various year/Semesters which are taken for computing overall aggregate shall be 25% of I year marks + 100% of 3rd and subsequent Semesters.
    ii. In respect IVC & ITI Lateral Entry candidates who are admitted directly into diploma course at the 3rd semester (i.e., second year) level the aggregate of (100%) marks secured at the 3rd and subsequent semesters of study shall be taken into consideration for determining the overall percentage of marks secured by the candidates for award of class/division.
d) Second Class shall be awarded to all students, who fail to complete the Diploma in the regular 3 years/ 3 ½ years and four subsequent examinations, from the year of first admission.

14. EXAMINATION FEE SCHEDULE:

The examination fee should be as per the notification issued by State Board of Technical Education and Training, AP from time to time.

15. STRUCTURE OF EXAMINATION QUESTION PAPER:

I. Formative assessment (Internal examination)

a) For theory Courses:

Three unit tests for first year and two unit tests for semesters shall be conducted with a duration of 90 minutes for each test for maximum marks of 40. It consists of part A and Part B.

Part A contains five questions and carries 16 marks. Among these five questions first question consists of four objective items like one word or phrase answer/filling-in the blanks/true or false etc. with one mark for each question. The other four questions are short answer questions and carry three marks each.

Part B carries 24 marks and consists of three questions with internal choice i.e., Either/Or type , and each question carries 8 marks.

The sum of marks of 3 tests for I year and 2 tests for semesters shall be reduced to 20 marks in each Course for arriving at final sessional marks.

b) For drawing Courses:

For I year:

Three unit tests with duration of 90 minutes and for maximum marks of 40 marks shall be conducted for first year. It consists of part A and Part B.

Part A consists four questions for maximum marks of 16 and each question carries four marks (4×4 marks=16 marks).

Part B carries maximum marks of 24 and consists of five questions while the student shall answer any three questions out of these five questions. Each question in this part carries a maximum marks of 8, (3×8 marks=24 marks).

The sum of marks obtained in 3 unit test marks shall be reduced to 20 marks for arriving at final sessional marks. Remaining 20 marks are awarded by the Course teacher based on the student's performance during regular class exercise.

For semester: Two unit tests with duration of 90 minutes and for maximum marks of 40 marks shall be conducted. The sum of marks obtained in 2 unit test marks shall be reduced to 20 marks for arriving at final sessional marks. Remaining 20 marks are awarded by the Course teacher based on the student's performance during regular class exercise

c) For Laboratory /workshop: 50% of total marks for the Course shall be awarded based on continuous assessment of the student in laboratory/workshop classes and the remaining 50% shall be based on the sum of the marks obtained by the students in two tests.

II. Summative assessment (End examination)

The question paper for theory examination is patterned in such a manner that the Weightage of periods/marks allotted for each of the topics for a particular Course be considered. End Examination paper is of 3 hours duration.

a) **Each theory paper consists of Section 'A', 'B' and 'C'**.

Section 'A' with Max marks of 30, contains 10 short answer questions. All questions are to be answered and each carries 3 marks, i.e., 10 x 3 = 30.

Section 'B' with Max marks of 40 contains 5 essay type questions including Numerical questions (without any divisions in the question), with internal choice(Either/or type), each carrying 8 marks, i.e., Max. Marks: 5 x 8 = 40.

Section 'C' with Max marks of 10 contains single essay type, Higher order Thinking skills question (HoTs)including Numerical questions, without choice (without any divisions in the question),

Thus the total marks for theory examination shall be: 80.

b) **For Engineering Drawing Course (107) consist of section 'A' and section 'B'**.

Section 'A' with max marks of 20, contains four (4) questions. All questions in section 'A' are to be answered to the scale and each carries 5 marks, ie. 4 x 5=20.

Section 'B' with max marks of 40, contains six (6) questions. The student shall answer any four (4) questions out of the above six questions and each question carries 10 Marks, ie. 4 x 10 = 40.

c) **Practical Examinations**

For Workshop practice and Laboratory Examinations, Each student has to pick up a question paper distributed by Lottery System.

Max. Marks for an experiment / exercise : 50
Max. Marks for VIVA-VOCE : 10
Total Max. Marks : 60

In case of practical examinations with 50 marks, the marks shall be distributed as

Max. Marks for an experiment / exercise : 25
Max. Marks for VIVA-VOCE : 05
Total Max. Marks : 30

In case of any change in the pattern of question paper, the same shall be informed sufficiently in advance to the candidates.

d) **Note: Evaluation for Laboratory Courses, other than Drawing courses**:

I. Instruction (teaching) in laboratory courses (except for the course on Drawing) hereafter shall be task/competency based as delineated in the Laboratory sheets, prepared by SBTET, AP and posted in its website.
II. Internal assessment for Laboratory shall be done on basis of task/s performed by the student as delineated in the laboratory sheets, prepared by SBTET, AP and posted in its website.
III. Question paper for End semester Evaluation shall be prepared as per SBTET rules in vogue.

16. ISSUE OF MEMORONDUM OF MARKS

All candidates who appear for the end examination will be issued memorandum of marks without any payment of fee. However candidates who lose the original memorandum of marks have to pay the prescribed fee to the Secretary, State Board of Technical Education and Training, A.P. for each duplicate memo from time to time.

17. MAXIMUM PERIOD FOR COMPLETION OF DIPLOMA Programmes:

Maximum period for completion of the diploma courses is twice the duration of the course from the date of First admission (includes the period of detention and discontinuation of studies by student etc.) failing which they will have to forfeit the claim for qualifying for the award of Diploma (They will not be permitted to appear for examinations after that date). This rule applies for all Diploma courses of 3 years and 3 ½ years of engineering and non-engineering courses.

18. ELIGIBILITY FOR AWARD OF DIPLOMA

A candidate is eligible for award of Diploma Certificate if he / she fulfil the following academic regulations.

i. He / She pursued a course of study for not less than 3 / 3 ½ academic years & not more than 6 / 7 academic years.

ii. He / she have completed all the Courses.

Students who fail to fulfil all the academic requirements for the award of the Diploma within 6 / 7 academic years from the year of admission shall forfeit their seat in the course & their seat shall stand cancelled.

For IVC & ITI Lateral Entry students:

i. He / She pursued a course of study for not less than 2 / 2 ½ academic years & not more than 4 / 5 academic years.

ii. He / she has completed all the Courses.

Students who fail to fulfill all the academic requirements for the award of the Diploma within 4 / 5 academic years from the year of admission shall forfeit their seat in the course & their seat shall stand cancelled.

19. ISSUE OF PHOTO COPY OF VALUED ANSWER SCRIPT, RECOUNTING& REVERIFICATION:

A) FOR ISSUE OF PHOTO COPIES OF VALUED ANSWER SCRIPTS

I. A candidate desirous of applying for Photo copy of valued answer script/s should apply within prescribed date from the date of the declaration of the result.

II. Photo copies of valued answer scripts will be issued to all theory Courses and Drawing Course(s).

III. The Photo copy of valued answer script will be dispatched to the concerned candidate's address as mentioned in the application form by post.

IV. No application can be entertained from third parties.

B) FOR RE-COUNTING(RC) and RE-VERIFICATION(RV) OF THE VALUED ANSWER SCRIPT

i. A candidate desirous of applying for Re-verification of valued answer script should apply within prescribed date from the date of the declaration of the result.

ii. Re-verification of valued answer script shall be done for all theory Courses' and Drawing Course(s).

iii. The Re-verification committee constituted by the Secretary, SBTETAP with Course experts shall re-verify the answer scripts.

I. **RE-COUNTING**

The Officer of SBTET will verify the marks posted and recount them in the already valued answer script. The variations if any will be recorded separately, without making any changes on the already valued answer script. The marks awarded in the original answer script are maintained (hidden).

II. RE-VERIFICATION

(i) The Committee has to verify the intactness and genuineness of the answer script(s) placed for Re-verification.

(ii) Initially single member shall carry out the re-verification.

(iii) On re-verification by single member, if the variation is less than 12% of maximum marks, and if there is no change in the STATUS in the result of the candidate, such cases will not be referred to the next level ie., for 2-Tier evaluation.

(iv) On re-verification by a single member, if the variation is more than 12% of maximum marks, it will be referred to 2-Tier evaluation.

(v) If the 2-Tier evaluation confirms variation in marks as more than 12% of maximum marks, the variation is considered as follows:

a) If the candidate has already passed and obtains more than 12% of the maximum marks on Re-verification, then the variation is considered.

b) If the candidate is failed and obtains more than 12% of the maximum marks on Re-verification and secured pass marks on re-verification, then the status of the candidate changes to PASS.

c) If a candidate is failed and obtains more than 12% of the maximum marks on Re-verification and if the marks secured on re-verification are still less than the minimum pass marks, the status of the candidate remain FAIL only.

(vii) After Re-verification of valued answer script the same or change if any therein on Re-verification, will be communicated to the candidate.

(viii) On Re-verification of Valued Answer Script if the candidate's marks are revised, the fee paid by the candidate will be refunded or else the candidate has to forfeit the fee amount.

Note: No request for Photo copies/ Recounting /Re-verification of valued answer script would be entertained from a candidate who is reported to have resorted to Malpractice in that examination.

20. MAL PRACTICE CASES:

If any candidate resorts to Mal Practice during examinations, he / she shall be booked and the Punishment shall be awarded as per SBTETAP rules and regulations in vogue.

21. DISCREPANCIES/ PLEAS:

Any Discrepancy /Pleas regarding results etc., shall be represented to the SBTETAP within one month from the date of issue of results. Thereafter, no such cases shall be entertained in any manner.

22. ISSUE OF DUPLICATE DIPLOMA

If a candidate loses his/her original Diploma Certificate and desires a duplicate to be issued he/she should produce written evidence to this effect. He / she may obtain a duplicate from the Secretary, State Board of Technical Education and Training, A.P., on payment of prescribed fee and on production of an affidavit signed before a First Class Magistrate (Judicial) and non-traceablecertificate from the Department of Police. In case of damage of original Diploma Certificate, he / she may obtain a duplicate certificate by surrendering the original damaged certificate on payment of prescribed fee to the State Board of Technical Education and Training, A.P.

In case the candidate cannot collect the original Diploma within 1 year from the date of issue of the certificate, the candidate has to pay the penalty prescribed by the SBTET AP from time to time.

23. ISSUE OF MIGRATION CERTIFICATE AND TRANSCRIPTS:

The Board on payment of prescribed fee will issue these certificates for the candidates who intend to prosecute Higher Studies in India or Abroad.

24. Specific Changes incorporated in present curriculum C-20 Bio Medical Engineering Branch:

a) Designing of small circuits is included in Electronic Devices and Circuits lab practice (BM-108) as suggested by the industrialists.

b) The course Electronic Circuits & Network analysis Lab in C-16 (BM-307) was separated as Electronic circuits lab practice(BM-306) and Network analysis lab practice (BM-307) in C-20.

c) The courses Bio-Medical Instrumentation Lab Practice(BM-409) and Analytical Instrumentation Lab Practice (BM-510) were clubbed as Bio Medical and Analytical Instrumentation Lab Practice (BM-410) in C-20.

d) Latest touch screen technology concept is included as learning outcome in the course Digital Electronics (BM-304) as suggested by the industrialists.

e) The course Analytical Instrumentation Engineering (BM-504) in C-16 has been moved to 4th semester with subject code BM-406 as suggested by the academicians.

f) The course Microprocessors & Interfacing (BM-403) in C-16 has been moved to 5th semester with subject code BM-503.

25. GENERAL

i. The Board may change or amend the academic rules and regulations or syllabi at any time and the changes or amendments made shall be applicable to all the students, for whom it is intended, with effect from the dates notified by the competent authority.

ii. All legal matters pertaining to the State Board of Technical Education and Training, AP are within the jurisdiction of Vijayawada.

iii. In case of any ambiguity in the interpretation of the above rules, the decision of the Secretary, SBTET, A.P is final.

C-20 Curriculum for $3^{1/2}$ year DBME
With Inplant training in Semester VII

VISION
Develop Biomedical Engineering professionals competent to face the global challenges in a progressive environment conducive to learn technical knowledge, skills blended with ethics and values, to serve the society and to better it for a happy and comfortable living.

MISSION

M1	To provide a competitive learning environment, through a need-based curriculum designed in collaboration with industry, conducive for high quality education emphasising on transfer of knowledge and skill development essential for the profession and the society as well.
M2	To nurture higher order leadership qualities and ethics and values in students to enable them to be leaders in their chosen professions while maintaining the highest level of ethics.
M3	To encourage the spirit of inquisition to promote innovation and entrepreneurship strengthened with life skills to sustain the stress.
M4	To foster effective interactions and networking with all the stake holders so as to work towards the growth and sustainability of the society and environment.

Programme Educational Objectives (PEOs)

Diploma in Biomedical Engineering programme is steadfast to transform students in to competent professionals with qualities of good human values and responsible citizens. On completion of the Diploma programme, the students should have acquired the following characteristics

PEO1	To apply technical knowledge and management principles in analyzing and planning problems in the field of electronics and Communication Engineering while ensuring maximization of economic benefits to society and minimization of damage to ecology and environment
PEO2	To be life-long learners with sprit of enquiry and zeal to acquire new knowledge and skills so as to remain contemporary and possess required professional skills.
PEO3	To enhance entrepreneurial, communication and other soft skills, which will enable them to work globally as leaders, team members and contribute to nation building for the betterment of the society.
PEO4	To make them strongly committed to the highest levels of professional ethics and focus on ensuring quality, adherence to public policy and law, safety, reliability and environmental sustainability in all their professional activities

PROGRAMME OUTCOMES (POs)

1. **Basic and discipline specific knowledge**: Apply knowledge of basic mathematics, science and engineering fundamentals and engineering specialization to solve the engineering problems.
2. **Problem analysis**: Identify and analyse well-defined engineering problems using codified standard methods
3. **Design/Development of solutions**: Design solutions for well-defined technical problems and assist with the design of systems components or processes to meet specified needs
4. **Engineering tools, Experimentation and Testing**: Apply modern engineering tools and appropriate technique to conduct standard tests and measurements.
5. **Engineering practices for society, sustainability and environment**: Apply appropriate technology in context of society, sustainability, environment and ethical practices.
6. **Project Management**: Use engineering management principles individually, as a team member or a leader to manage projects and effectively communicate about well-defined engineering activities.
7. **Life-long learning**: Ability to analyse individual needs and engaging updating in the context of technological changes.

PROGRAMME SPECIFIC OUTCOMES (PSOs)

PSO1: Ability to apply the fundamentals of electronics in various domains of analog and digital electronic systems.
PSO2: Acquire& comprehend the basic skill sets, implementing the techniques and tools required for biomedical engineering.
PSO3: An ability to use software tools, mathematics, science and engineering for precise diagnosis and therapeutic applications.

FIRST YEAR

Subject Code	Name of the Subject	Instruction period /week		Total Period /year	Scheme of Examination			
		Theory	Practical/ Tutorial		Duration (hours)	Sessional Marks	End Exam Marks	Total Marks
THEORY								
BM-101	English	3	-	90	3	20	80	100
BM-102	Engineering Mathematics –I	5	-	150	3	20	80	100
BM-103	Engineering Physics	4	-	120	3	20	80	100
BM-104	Engineering chemistry & Environmental studies	4	-	120	3	20	80	100
BM-105	Basic Electrical Engineering	4	-	120	3	20	80	100
BM-106	Electronic Components & Devices	4	-	120	3	20	80	100
PRACTICAL								
BM-107	Engineering Drawing	-	6	180	3	40	60	100
BM-108	Electronic Components & Devices Laboratory	-	6	180	3	40	60	100
BM-109	109-A Physics Lab	-	1.5	45	3 (1.5+1.5)	20	30	100 (50+5)
	109-B Chemistry Lab		1.5	45		20	30	
BM-110	Computer Fundamentals Practice	-	3	90	3	40	60	100
	TOTAL	**24**	**18**	**1260**		**280**	**720**	**1000**

3rd SEMESTER

Subject Code	Name of the Subject	Instruction period / week		Total Period / Sem	Scheme of Examination			
		Theory	Practical /Tutorial		Duration (hours)	Sessional Marks	End Exam Marks	Total Marks
THEORY								
BM-301	Engineering Mathematics- II	4	-	60	3	20	80	100
BM-302	Electronic Circuits	6	-	90	3	20	80	100
BM-303	Network Analysis	6	-	90	3	20	80	100
BM-304	Digital Electronics	6	-	90	3	20	80	100
BM-305	Programming In 'C' and MATLAB	6	-	90	3	20	80	100
PRACTICAL								
BM-306	Electronic Circuits Lab Practice	-	4	60	3	40	60	100
BM-307	Network Analysis Lab Practice	-	3	45	3	40	60	100
BM-308	Digital Electronics Lab Practice	-	4	60	3	40	60	100
BM-309	Programming in 'C' & MATLAB Practice	-	3	45	3	40	60	100
TOTAL		**28**	**14**	**630**	**-**	**260**	**640**	**900**

4th Semester

Subject Code	Name of the Subject	Instruction period / week		Total Period / Sem	Scheme of Examination			
		Theory	Practical /Tutorial		Duration (hours)	Sessional Marks	End Exam Marks	Total Marks
THEORY								
BM-401	Engineering Mathematics-III	3	-	45	3	20	80	100
BM-402	Linear Integrated Circuits Applications	5	-	75	3	20	80	100
BM-403	Communication& Data Transmission	5	-	75	3	20	80	100
BM-404	Physiological Systems Engineering	5	-	75	3	20	80	100
BM-405	Bio-Medical Instrumentation	5	-	75	3	20	80	100
BM-406	Analytical Instrumentation Engineering	6	-	90	3	20	80	100
PRACTICAL								
BM-407	LIC & ECAD Lab Practice	-	3	45	3	40	60	100
BM-408	Communication skills lab	-	3	45	3	40	60	100
BM-409	Communication& Data Transmission Lab Practice	-	3	45	3	40	60	100
BM-410	Bio-Medical & Analytical Instrumentation Lab Practice	-	4	60	3	40	60	100
TOTAL		**29**	**13**	**630**	**-**	**280**	**720**	**1000**

5TH Semester

Subject Code	Name of the Subject	Instruction period / week		Total Period /Sem	Scheme of Examination			
		Theory	Practical/Tutorial		Duration (hours)	Sessional Marks	End Exam Marks	Total Marks
THEORY								
BM-501	Computer Networks	5	-	75	3	20	80	100
BM-502	Measurement & Test Equipment	5	-	75	3	20	80	100
BM-503	Microprocessors	5	-	75	3	20	80	100
BM-504	Bio-Medical Equipment	5	-	75	3	20	80	100
BM-505	Medical Implants Engineering	5	-	75	3	20	80	100
BM-506	Medical Informatics & Telemedicine	5	-	75	3	20	80	100
PRACTICAL								
BM-507	Measurement & Test Equipment Lab Practice	-	3	45	3	40	60	100
BM-508	Life Skills	-	3	45	3	40	60	100
BM-509	Computer Hardware & Networking Lab Practice	-	3	45	3	40	60	100
BM-510	Microprocessors lab practice	-	3	45	3	40	60	100
TOTAL		**30**	**12**	**630**	**-**	**280**	**720**	**1000**

6TH Semester

Subject Code	Name of the Subject	Instruction period / week		Total Period / Sem	Scheme of Examination			
		Theory	Practical/ Tutorial		Duration (hours)	Sessional Marks	End Exam Marks	Total Marks
THEORY								
BM-601	Hospital Management & Entrepreneurship	6	-	90	3	20	80	100
BM-602	Microcontrollers& Interfacing	6	-	90	3	20	80	100
BM-603	Advanced Biomedical Equipment	6	-	90	3	20	80	100
BM-604	Medical Imaging Techniques	6	-	90	3	20	80	100
BM-605	Biomedical Signal Processing	6	-	90	3	20	80	100
PRACTICAL								
BM-606	Microcontrollers Lab Practice	-	3	45	3	40	60	100
BM-607	Biomedical Equipment Lab Practice	-	3	45	3	40	60	100
BM-608	Biomedical Signal Processing Lab Practice	-	3	45	3	40	60	100
BM-609	Biomedical circuits Design & Servicing Lab	-	3	45	3	40	60	100
TOTAL		**30**	**12**	**630**	**-**	**260**	**640**	**900**

FIRST YEAR

FIRST YEAR

Subject Code	Name of the Subject	Instruction period /week		Total Period /year	Scheme of Examination			
		Theory	Practical/ Tutorial		Duration (hours)	Sessional Marks	End Exam Marks	Total Marks
THEORY								
BM-101	English	3	-	90	3	20	80	100
BM-102	Engineering Mathematics –I	5	-	150	3	20	80	100
BM-103	Engineering Physics	4	-	120	3	20	80	100
BM-104	Engineering chemistry & Environmental studies	4	-	120	3	20	80	100
BM-105	Basic Electrical Engineering	4	-	120	3	20	80	100
BM-106	Electronic Components & Devices	4	-	120	3	20	80	100
PRACTICAL								
BM-107	Engineering Drawing	-	6	180	3	40	60	100
BM-108	Electronic Components & Devices Laboratory	-	6	180	3	40	60	100
BM-109	109-A Physics Lab	-	1.5	45	3 (1.5+1.5)	20	30	100 (50+5)
	109-B Chemistry Lab		1.5	45		20	30	
BM-110	Computer Fundamentals Practice	-	3	90	3	40	60	100
	TOTAL	**24**	**18**	**1260**		**280**	**720**	**1000**

English

Course Code	Course Title	No. of Periods/Week	Total No. of Periods	Marks for FA	Marks for SA
BM-101	English	3	90	20	80

S. No.	Unit Title	No of Periods	COs Mapped
1	English for Employability	8	CO1, CO2, CO3, CO4
2	Living in Harmony	8	CO1, CO2, CO3, CO4
3	Connect with Care	8	CO1, CO2, CO3, CO4
4	Humour for Happiness	8	CO1, CO2, CO3, CO4
5	Never Ever Give Up!	8	CO1, CO2, CO3, CO4
6	Preserve or Perish	9	CO1, CO2, CO3, CO4
7	The Rainbow of Diversity	8	CO1, CO2, CO3, CO4
8	New Challenges- Newer Ideas	8	CO1, CO2, CO3, CO4
9	The End Point First!	8	CO1, CO2, CO3, CO4
10	The Equal Halves	8	CO1, CO2, CO3, CO4
11	Dealing with Disaster	9	CO1, CO2, CO3, CO4
Total Periods		**90**	

Course Objectives	To improve the skills of English Language use by enriching vocabulary and learning accurate structures for effective communication.
	To comprehend themes for value based living in professional and personal settings.

CO No.	Course Outcomes
CO1	Applies perceptions of themes related to societal responsibility of adolescents towards their surroundings.
CO2	Demonstrates knowledge of form and function of 'grammar items' and use them in both academic and everyday situations.
CO3	Demonstrates effective English communication skills with competence in listening, speaking, reading and writing in academic, professional and everyday contexts.
CO4	Displays positivity and values of harmonious living in personal and professional spheres as reflected through communication.

CO-PO Matrix

Course Code BM-101	Course Title: English Number of Course Outcomes: 4				No. of Periods: 90
POs	**Mapped with CO No.**	**CO Periods Addressing PO in Column 1**		**Level of Mapping (1,2,3)**	**Remarks**
		Number	**Percentage**		
PO1		Not directly Applicable for English course, however activities that use content from science and technology relevant to the Programme taken up by the student shall be exploited for communication in the Course.			
PO2					
PO3					
PO4					
PO5	CO1, CO2, CO3, CO4	20	22		>50%: Level 3 21-50%: Level 2 Up to 20%: Level 1
PO6	CO1, CO2, CO3, CO4	52	58		
PO7	CO1, CO2, CO3, CO4	18	20		

Level 3 – Strongly Mapped
Level 2- Moderately Mapped
Level 1- Slightly Mapped

	PO 1	PO 2	PO 3	PO 4	PO 5	PO 6	PO 7
CO 1					✓	✓	✓
CO 2					✓	✓	✓
CO3					✓	✓	✓
CO 4					✓	✓	✓

NOTE: CO-PO groups shall be fulfilled through activities that use content from science and technology relevant to the Programme taken up by the student shall be exploited for communication in the Course.

PO5: Appropriate quiz programme may be conducted at intervals and duration as decided by concerned teacher.

PO6: Seminars on applications of mathematics in various engineering disciplines are to be planned and conducted.

PO7: Such activities are to be planned that students visit library to refer standard books on Mathematics and latest updates in reputed national and international journals, attending seminars, learning mathematical software tools.

Blue Print of Question Paper:

S. No.	Name of the Unit	Periods Allocated	Weightage Allocated	Marks Wise Distribution of Weightage				Question Wise Distribution of Weightage				CO's Mapped
				R	U	Ap	An	R	U	Ap	An	
1	English for Employability	8	17	3	8*	3		1	1*	1*		CO1, CO2, CO3, CO4
2	Living in Harmony	8		3				1				CO1, CO2, CO3, CO4
3	Connect with Care	8										CO1, CO2, CO3, CO4
4	Humour for Happiness	8	14		3	8*			1	1*		CO1, CO2, CO3, CO4
5	Never Ever Give Up!	8			3				1			CO1, CO2, CO3, CO4
6	Preserve or Perish	9	14		8*	3			1*	1		CO1, CO2, CO3, CO4
7	The Rainbow of Diversity	8				3	10*			1		CO1, CO2, CO3, CO4
8	New Challenges - Newer Ideas	8	35		8*	8*+3+3+3			1*	4	1*	CO1, CO2, CO3, CO4
9	The End Point First!	8										CO1, CO2, CO3, CO4
10	The Equal Halves	8										CO1, CO2, CO3, CO4
11	Dealing with Disasters	9										CO1, CO2, CO3, CO4
TOTAL		**90**	**80**	**6**	**30**	**34**	**10**	**2**	**5**	**8**	**1**	

PART-A: 10 Questions 3 marks each =30 Marks
PART-B: 5 Questions 8 marks each =40 Marks
Part-C: 1 Question 10 marks =10 Marks
(Higher Order Question)

All Questions are compulsory : 60 minutes
Internal choice : 90 minutes

No choice, one compulsory question : 30 minutes

NOTE: * indicates questions can be given from any of the corresponding lessons in the blue print.

Question Paper Pattern for Unit Tests

Part A: 16 marks: 4 questions with 1 mark each (FIB, True/false, one word/phrase, etc.)
4 questions with 3 marks each (short answer/ descriptive/ applicative questions)
Part B: 24 marks: 3 questions 8 marks each with internal choice

Learning Outcomes

1. English for Employability

1.1. Explain the need for improving communication in English for employability
1.2. Use adjectives and articles effectively while speaking and in writing
1.3. Write simple sentences.

2. Living in Harmony

2.1. Develop positive self-esteem for harmonious relationships
2.2. Use affixation to form new words
2.3. Use prepositions and use a few phrasal verbs contextually

3. Connect with Care

3.1. Use social media with discretion
3.2. Speak about abilities and possibilities
3.3. Make requests and express obligations
3.4. Use modal verbs and main verbs in appropriate form
3.5. Write short dialogues for everyday situations

4. Humour for Happiness

4.1. Explain the importance of humour for a healthy living
4.2. Improve vocabulary related to the theme
4.3. Display reading and speaking skills
4.4. Frame sentences with proper Subject – Verb agreement
4.5. Explain the features of a good paragraph and learn how to gather ideas as a preliminary step for writing a good paragraph.

5. Never Ever Give Up!

5.1. Practice to deal with failures in life.
5.2. Use the present tense form for various every day communicative functions such as speaking and writing about routines, professions, scientific descriptions and sports commentary.
5.3. Write paragraphs with coherence and other necessary skills.

6. Preserve or Perish

6.1. Describe the ecological challenges that we face today and act to save the environment.
6.2. Narrate / Report past events.
6.3. Develop vocabulary related to environment.
6.4. Write e-mails.

7. The Rainbow of Diversity

7.1. Illustrate and value other cultures for a happy living in multi-cultural workspace
7.2. use different types of sentences
7.3. Ask for or give directions, information, instructions
7.4. Use language to express emotions in various situations
7.5. Write letters in various real life situations

8. New Challenges – Newer Ideas

8.1. Explain the functional difference between Active Voice and Passive Voice
8.2. Use Passive Voice to speak and write in various contexts
8.3. List the major parts and salient features of an essay
8.4. Explain latest innovations and get motivated

9. The End Point First!

9.1. Illustrate the importance of setting a goal in life
9.2. Report about what others have said both in speaking and writing
9.3. Write an essay following the structure in a cohesive and comprehensive manner
9.4. Apply the words related to Goal Setting in conversations and in life

10. The Equal Halves

10.1. Value the other genders and develop a gender-balanced view towards life
10.2. Identify the use of different conjunctions in synthesising sentences
10.3. Write various types of sentences to compare and contrast the ideas
10.4. Apply the knowledge of sentence synthesis in revising and rewriting short essays
10.5. Develop discourses in speech and writing

11. Dealing with Disasters

11.1. Speak and write about different kinds of disasters and the concept of disaster management
11.2. Generate vocabulary relevant to disaster management and use it in sentences
11.3. Analyze an error in a sentence and correct it
11.4. write different kinds of reports

Textbook: INTERACT (A Textbook for I Year English) - Published by SBTET, AP

Reference Books:

Martin Hewings : Advanced Grammar in Use, Cambridge University Press
Murphy, Raymond : English Grammar in Use,Cambridge University Press
Sidney Greenbaum : Oxford English Grammar, Oxford University Press
Wren and Martin (Revised byN.D.V. Prasad Rao) : English Grammar and Composition, Blackie ELT Books, S. Chand and Co.
Sarah Freeman : Strengthen Your Writing, Macmillan

STATE BOARD OF TECHNICAL EDUCATION –A.P

C20- BM-101-ENGLISH

UNIT TEST-1

Time: 90 minutes **Max. Marks: 40**

PART-A **4X4= 16 marks**

Instructions: Answer all the questions. Each question carries FOUR Marks.

1. Rewrite / Fill in the blank as directed. Each question carries ½ Mark. **(CO2)**

a) Write the antonym of 'cruel'

b) Write the synonym of 'love'

c) Give prefix to 'adventure'.

d) Give suffix to ' liberate'

e) It is _____ universal truth. (Fill in with suitable article)

f) The boy is fond ____ ice-cream. (Fill in the blank with proper preposition)

g) He ____not like sweets. (Fill in the blank with correct primary auxiliary verb.)

h) We _____ respect our national flag. (Fill in with a proper modal verb)

2. Rewrite the sentences as directed. Each question carries One mark. 4X1=4 Marks **(CO2)**

a) No other metal is so useful as iron. (Change into superlative degree)

b) Very few students are so clever as Ramesh. (Change into comparative degree)

c) Guess the contextual meaning of the italicized word in the following sentence.

"The CBI officer has *interrogated* the bank employees in connection with the scam."

d) only sings plays Prasanth not also well but cricket. (Rearrange the jumbled words)

3. Fill in the blanks with proper form of the verb given in brackets. 4X1 = 4 marks **(CO2)**

The IPSGM _____(hold) in our college last month. Nearly all the colleges in our zone _____(participate) in the event. The prizes _____ (distribute) by the district collector.

Next year, Government Polytechnic, Vijayawada _____ (conduct) the games meet.

4. Rewrite the following sentences after making necessary corrections: 4X 1= 4 Marks **(CO3)**

a) The police has arrested the culprit.

b) Three hundred miles are a long distance.

c) The Principal along with the Heads of Sections have visited the laboratories.

d) Either he or I is to blame.

PART-B **3X8=24 Marks**

Instructions: Answer all the questions and each question carries EIGHT marks.

5. Write a dialogue of at least five turns between a shopkeeper and customer about buying a mobile phone. **(CO3)**

6. Make an analysis and write a paragraph in around 100 words about your strengths and weaknesses in learning and using English and also the measures to improve it. **(CO3)**

7. Write a paragraph in about 100 words on how to overcome low esteem and negativity.

(CO3, CO4)

STATE BOARD OF TECHNICAL EDUCATION –A.P
C20-BM-101-ENGLISH
UNIT TEST-II

Time: 90 minutes **Max. Marks: 40**

PART-A **4X4= 16 Marks**

Instructions: Answer all the questions. Each question carries FOUR marks.

1. Match the words in column A with their corresponding meanings in column B **(CO2)**

Column A	**Column B**
a) Deserve	i) continuous
b) hidden	ii) protect
c) Preserve	iii) worthy
d) Incessant	iv) praise
	v) unseen
	vi) affection

2. Rewrite as directed: **(CO3)**
   a) You ask your Mom to give you another chocolate. (Change into a request)
   b) The baby fell down and got injured. (Change into an exclamatory sentence)
   c) The match was very interesting. (Frame a question using 'how')
   d) Hemanth submitted his project report last week. (Frame Yes-No question)

3. Fill in the blanks with appropriate forms of verbs given in brackets: **(CO2)**
   a) The Sun _____ (set) in the west.
   b) Balu _____ (sing) for over fifty years in the films.
   c) We _____ (see) a camel on the road yesterday.
   d) They _____(enter) the stadium before the gates were closed.

4. Change the voice of the following: **(CO2)**
   a) Marconi invented the radio.
   b) Sravanthi has been offered a job.
   c) Pragathi can type the letter.
   d) The Chief Guest will be received by the Final year students.

PART-B **3X8=24 Marks**

Answer all the questions. Each question carries EIGHT marks.

5. Write a letter to your younger brother motivating him to deal with failures and hurdles in life. **(CO3)**

6. Write an essay in around120 words on the role of robots in the modern world. **(CO3)**

7. Read the following passage and answer the questions that follow: **(CO3)**

The greatest enemy of mankind, as people have discovered, is not science, but war. Science merely reflects the social forces by which it is surrounded. It was found that when there is peace, science is constructive when there is war, science is perverted to destructive end. The weapons which science gives us do not necessarily create war. These make war increasingly more terrible. Until now, it has brought us on the doorstep of doom. Our main problem, therefore, is not to curb science, but to substitute law for force, and international government for anarchy in the relations of one nation with another. That is a job in which everybody must participate, including the scientists. Now we are face to face with these urgent questions: Can education and tolerance, understanding and creative intelligence run fast enough to keep us side by side without our mounting capacity to destroy? That is the question which we shall have to answer, one way or the other, in this generation. Science must help us in the answer, but the main decision lies within ourselves. The hour is late and our work has scarcely begun.

a. What is the chief enemy of man?
b. What does science reflect?
c. When is science perverted?
d. What makes war more terrible?
e. Why do we need international government?
f. What are the four aspects that may stop destruction?
g. Have we really started our work to fight the problem discussed?
h. Pick the word from the passage that would mean: ‘replace with other one’

STATE BOARD OF TECHNICAL EDUCATION –A.P
C20-BM-101-ENGLISH
UNIT TEST-III

Time: 90 minutes **Max. Marks: 40**

PART-A **4X4 = 16 Marks**

Instructions: Answer all the questions. Each question caries Four marks.

1. Give the meaning of the word in italics: **(CO3)**

a) When the girls laughed in the class, the teacher was *furious.*

b) He was *rusticated* from the school for his misbehavior.

c) Vikramaditya was a *benevolent* Indian King.

d) We should not show any *discrimination* between boys and girls.

2. Change the speech of the following: **(CO2)**
   a) He said, "I am sorry."
   b) The teacher said to the boys, "Why are you late?"
   c) Sushma said that she had submitted her report recently.
   d) Pratap requested Priya to give him her pen.
3. Rewrite as directed: **(CO2)**
   a) Though he was weak, he took the test. (change into a simple sentence)
   b) You must work hard to achieve success. (change into a complex sentence)
   c) If you run fast, you will catch the bus. (change into a compound sentence)
   d) The fog disappeared when the Sun rose. (Split into two simple sentences)
4. Locate eight errors from the following passage and correct them. **(CO2)**

Once upon a time there live a king who was very kind to his people. In his council of ministers, there is a wise man. He had a son called Sumanth who was a educated and highly learned. Once the wise minister fall sick. All the physicists in the country could not heal him. Then Sumanth will go in search of medicine in Himalayas. He bring the special medicinal roots to cure his father's sickness. Sumanth looked before his father carefully and healed him. The king rewarded Sumanth with rich gifts.

PART- B **3X8 = 24 Marks**

Instructions: Answer all the questions and each one carries eight marks.

5. Read the following paragraph and make notes first and then its summary. **(CO3)**

Astronauts are people who travel on space ships. They need to have a very clean home. They travel far from Earth. We need clean kitchens everywhere on earth and in space. Astronauts have to solve two problems: how to get food and how to keep their spaceship clean. Here is how they solved the food problem. At first, the astronauts took tubes of food with them into space. They would squeeze a tube and eat semi-liquid food. It did not taste great, but since they did not need to take dishes or silverware with them, they had no dishes to wash. Today's spaceships have a bigger menu. Astronauts can eat from bowls. In fact, they take cereal and other standard foods with them. The foods are packaged in special containers to keep them fresh. They use knives, forks, and spoons. One unusual item on their table is a pair of scissors. They use the scissors to open the food packages. They can eat right from the package. They have a kitchen on the spaceship. Its oven can heat food to 170 degrees. The kitchen has water and sets of meals that come on trays. The astronauts choose their menu before they go into space. They take a lot of food with them. The astronauts keep bread and fresh fruits and vegetables in a special food locker. How do they keep the kitchen clean? They do not have to worry about mice or other rodents. They make sure that there are no rodents before the ship leaves. But sometimes mice travel on the ship. Those mice are part of experiments. They live in cages. How do astronauts keep their trays clean? That is another health problem the astronauts solve. They need to stay healthy in space. To carry a lot of water to wash trays would be a lot of extra weight. They pack wet wipes in plastic bags. They use them to clean trays. So, their kitchen is clean and they stay healthy.

6. Write an essay in about 120 words on the importance of goal setting and your short and long term goals. **(CO3,CO4)**

7. Write a report about the bush fire that raged in Australia recently by using the following clues: forest, natural disaster, wild fire, dried leaves, no rain fall, wild animals, burnt alive, loss of flora and fauna, fire fighters, uncontrollable, moderate rains, environmental pollution, measures to protect...etc. **(CO3)**

STATE BOARD OF TECHNICAL EDUCATION- A.P
Model Question Paper
C20-BM-101- ENGLISH

Time: 3hrs **Max.Marks:80**

PART-A **10X3=30 Marks**

Instructions: Answer all the questions. Each question carries Three marks.

1. a) Fill in the blanks with suitable articles: **(CO2)**

   I have seen _____ European at _____local market.

   b) Fill in with proper form of adjective given in the bracket:**(CO2)**

   China is the _____country in the world. (populous, more populous, most populous)

   c) i) Choose the synonym from the following for the word : 'filthy' **(CO3)**

   dirty / clean / hygienic / tidy

   ii) Choose the antonym from the following for the word: 'exterior' **(CO3)**

   external / internal / open / interior

2. a) i) Give prefix for the word: 'popular' **(CO2)**

   ii) Write suffix for the word : 'king' **(CO2)**

   b) He was married _____ her _____ January 2015. (Fill in with appropriate preposition) **(CO3)**

   c) Match the words in column A with their corresponding meanings in column B: **(CO2)**

Column-A	**Column-B**
i) Dynamic	a) tasty
ii) Gloomy	b) active
	c) sad
	d) proud

3. a) The old man *hunted* for his spectacles. (Give the contextual meaning of the word in italics) **(CO3)**

   b) The committee / have submitted / its report / to the President. (Identify the part which contains an error) **(CO3)**

   c) recently has a scooter purchased Shanthi. (Rearrange the jumbled words to make a meaningful sentence.) **(CO3)**

4. a) Use the following primary auxiliary verb in sentence of your own: **(CO2)**

' does'

b) Fill in the blank with proper modal auxiliary verb based on the clue in the bracket: **(CO2)**

Harish _____ speak four languages. (ability)

c) Rakesh wants two hundred rupees from his father. (Write the sentence how he requests his Father) **(CO2)**

5. Fill in the blanks with suitable form of the verb given in brackets: **(CO2)**

a) He _____ (go) for a walk daily.
b) The bus _____ (arrive) just now.
c) We _____ (live) in Chennai since 2005.

6. Change the voice of the following sentences: **(CO2)**

a) English is spoken all over the world.
b) They watched a movie yesterday.
c) The Chief Minister will inaugurate the exhibition.

7. a) It is a beautiful rainbow. (Change into an exclamatory sentence) **(CO3)**
b) C.V. Raman won the Nobel Prize in 1930. (Frame a question using 'When') **(CO3)**
c) He can swim across the river. (change into 'Yes / No' question) **(CO3)**

8. Change the speech of the following: **(CO2)**

a) He said, "I will go to Delhi tomorrow."
b) Ravi said to Ashok, " Where are you going?"
c) She told him to mind his own business.

9. Rewrite as directed: **(CO2)**

a) In spite of being busy he attended the meeting. (Rewrite the sentence using 'though')
b) She is poor. She is honest. (combine the two sentences using 'but')
c) On seeing the tiger, he climbed a tree. (split into two simple sentences)

10. Rewrite the following sentences after making necessary corrections: **(CO2)**

a) We have gone to picnic yesterday.
b) Suresh watched T.V when I went to his house.
c) They left Gujarat before the earthquake occurred.

PART-B **5X8=40**

Instructions: Answer the following questions. Each question carries EIGHT marks.

11. Write a paragraph in about 100 words on what you do daily. **(CO3,CO4)**

OR

Write a paragraph in about 100 words on the uses and misuses of social media.

12. Construct a dialogue of at least five turns between an American and you about places worth visiting in your city. **(CO3,CO4)**

OR

Compose a dialogue of at least five turns between two friends, one favouring homemade food and the other, fast foods.

13. Write a letter to your parents about your preparation for year-end examinations. **(CO3,CO4)**

OR

Write a letter to the editor of a newspaper about the inconvenience caused due to loud speakers in your area.

14. Write an essay in about 120 words on measures to prevent water pollution.

OR

Write an essay in about 120 words on importance of gender equality.

15. Read the following passage and answer the questions that follow: **(CO3)**

A farmer in ancient China had a neighbour who was a hunter, and who owned ferocious and poorly trained hunting dogs. They jumped over the fence frequently and chased the farmer's lambs. The farmer asked his neighbour to keep his dogs in check, but this fell on deaf ears. One day the dogs again jumped the fence, attacked and severely injured several of the lambs.

The farmer had had enough, and went to town to consult a judge who listened carefully to the story and said: "I could punish the hunter and instruct him to keep his dogs chained or lock them up. But you would lose a friend and gain an enemy. Which would you rather have, friend or foe for a neighbour?" The farmer replied that he preferred a friend. “Alright, I will offer you a solution that keeps your lambs safe, and which will keep your a neighbour a friend." Having heard the judge's solution, the farmer agreed.

Once at home, the farmer immediately put the judge's suggestions to the test. He took three of his best lambs and presented them to his neighbour's three small sons, who were beside themselves with joy and began to play with them. To protect his son's newly acquired playthings, the hunter built a strong kennel for his dogs. Since then, the dogs never again bothered the farmer's lambs. Out of gratitude for the farmer's generosity toward his sons, the hunter often shared the game he had hunted with the farmer. The farmer reciprocated by sending the hunter the cheese he had made. Within a short time the neighbours became good friends.

a) What kind of dogs does the neighbor have?
b) When did the farmer consult the judge?
c) What would be the consequence if the judge punished the neighbor?
d) What was the solution suggested by the judge?
e) What did the neighbour's sons do with the gifts they received?
f) How did the dogs stop bothering the farmer's lambs?
g) What items are exchanged happily between the two neighbours?
h) Pick the word from the passage that would mean: 'a closed shelter for dogs'.

OR

Read the following short poem and answer the questions that follow:

Crisp in the winter's morning,
Softly all through the night,
What is this without warning,
Falling and white?

I have never seen snow,
But I can imagine it quite –
Not how it tastes, but I know,
It falls and is white.

One morning I'll open the door,
To bring in the morning's milk,
And all around there'll be snow –
Fallen and still.

How I'll roll in the stuff!
How I'll tumble and spin!
Until the neighbours cry,
Enough!And send me back in.

Q.1. What is the poem about?
2. How does snow fall?
3. Did you ever touch snow? How did you feel?
4. a) Pick the word from the poem that means 'slip and fall'
b) Write the antonym for the word 'soft'

SECTION – C **1X10=10 Marks**

16. Write a report on the blood donation camp organized by International Red Cross Society in your college. Use the following clues: date, time, place, arrangements, donors, equipment, doctors, response, sponsors, snacks, volunteers, help others, save lives…etc.

Course Code	Course Title	No. of Periods/week	Total No. of periods	Marks for FA	Marks for SA
BM-102	Engineering Mathematics-I	5	150	20	80

S.No.	Unit Title	No. of periods	COs mapped
1	Algebra	31	CO1
2	Trigonometry	44	CO2
3	Co-ordinate Geometry	23	CO3
4	Differential Calculus	33	CO4
5	Applications of Differentiation	19	CO4, CO5
	Total Periods	**150**	

Course Objectives	(i) To apply the principles of Algebra, Trigonometry and Co-Ordinate Geometry to real-time problems in engineering. (ii) To comprehend and apply the concept of Differential Calculus in engineering applications.

Course Outcomes	CO1	Identify various functions, resolve partial fractions and solve problems on matrices.
	CO2	Solve problems using the concept of trigonometric functions, their inverses and complex numbers.
	CO3	Find the equations and properties of straight lines, circles and conic sections in coordinate system.
	CO4	Evaluate the limits and derivatives of various functions.
	CO5	Evaluate solutions for engineering problems using differentiation.

ENGINEERING MATHEMATICS – I
COMMON TO ALL BRANCHES
Learning Outcomes
UNIT - I

C.O. 1 Identify various functions, resolve partial fractions and solve problems on matrices.

L.O.1.1 Define Set, ordered pairs and Cartesian product - examples.

1.2 Explain Relations and functions – examples

1.3 Find Domain & Range of functions – simple examples.

1.4 Classify types of functions (into, many-to-one, one-one, onto and bijective).

1.5 Define inverse functions - examples.

1.6 Define rational, proper and improper fractions of polynomials.

1.7 Explain the procedure of resolving rational fractions of the type mentioned below into partial fractions

$i)$ $\dfrac{f(x)}{(ax+b)(cx+d)}$ $ii)$ $\dfrac{f(x)}{(ax+b)^2(cx+d)}$

$iii)$ $\dfrac{f(x)}{(x^2+a^2)(bx+c)}$ $iv)$ $\dfrac{f(x)}{(x^2+a^2)(x^2+b^2)}$

1.8 Define a matrix and order of a matrix.

1.9 State various types of matrices with examples (emphasis on 3rd order square matrices).

1.10 Compute sum, scalar multiplication and product of matrices. Illustrate the properties of these operations such as associative, distributive, commutative properties with examples and counter examples.

1.11 Define the transpose of a matrix and write its properties;

1.12 Define symmetric and skew-symmetric matrices with examples Resolve a square matrix into a sum of a symmetric and skew- symmetric matrices and provide examples.

1.13 Define determinant of a square matrix, minor, co-factor of an element of a 3x3 square matrix with examples. Expand the determinant of a 3 x 3 matrix using Laplace expansion formula. State and apply the properties of determinants to solve problems.

1.14 Distinguish singular and non-singular matrices. Define multiplicative inverse of a matrix and list properties of adjoint and inverse. Compute adjoint and multiplicative inverse of a square matrix.

1.15 Solve system of 3 linear equations in 3 unknowns using Cramer's rule and matrix inversion method.

UNIT - II

C.O.2 Solve problems using the concept of trigonometric functions, their inverses and complex numbers.

L.O. 2.1 Define trigonometric ratios of any angle.

2.2 List the values of trigonometric ratios at specified values.

2.3 Draw graphs of trigonometric functions.

2.4 Explain periodicity of trigonometric functions.

2.5 Define compound angles and state the formulae of sin(A±B), cos(A±B), tan(A±B) and cot(A±B).

2.6 Give simple examples on compound angles to derive the values of $\sin 15^0$, $\cos 15^0$, $\sin 75^0$, $\cos 75^0$, $\tan 15^0$, $\tan 75^0$ etc.

2.7 Derive identities like $\sin(A+B)\sin(A-B) = \sin^2 A - \sin^2 B$ etc.

2.8 Solve simple problems on compound angles.

2.9 Derive the formulae of multiple angles 2A, 3A etc and sub multiple angles A/2 in terms of angle A of trigonometric functions.

2.10 Derive useful allied formulas like $\sin^2 A = (1 - \cos 2A)/2$ etc.

2.11 Solve simple problems using the above formulae

Syllabus for Unit test-I completed

2.12 Derive the formulae on transforming sum or difference of two trigonometric ratios into a product and vice versa, examples on these formulae.

2.13 Solve problems by applying these formulae to sum or difference or product of three or more terms.

2.14 Explain the concept of the inverse of a trigonometric function by selecting an appropriate domain and range.

2.15 Define inverses of six trigonometric functions along with their domains and ranges.

2.16 Derive relations between inverse trigonometric functions so that given $A = \sin^{-1}x$, express angle A in terms of other inverse trigonometric functions with examples.

2.17 State various properties of inverse trigonometric functions and identities like

$\sin^{-1}x + \cos^{-1}x = \frac{\pi}{2}$ etc.

2.18 Apply formulae like $\tan^{-1}x + \tan^{-1}y = \tan^{-1}\left(\frac{x+y}{1-xy}\right)$, *where* $x \geq 0, y \geq 0, xy < 1$ etc., to solve Simple problems.

2.19 Explain what is meant by solutions of trigonometric equations and find the general solutions of $\sin x = k$, $\cos x = k$ and $\tan x = k$ with appropriate examples.

2.20 Solve models of the type $a\sin^2 x + b\sin x + c = 0$, $a\cos x + b\sin x = c$ etc., and problems using simple transformations.

2.21 State sine rule, cosine rule, tangent rule and projection rule.

2.22 Explain the formulae for sin A/2, cos A/2, tan A/2 and cot A/2 in terms of semi-perimeter s and sides a,b,c and solve problems.

2.23 List various formulae for the area of a triangle.

2.24 Solve problems using the above formulae.

2.25 Define Sinh x, cosh x and tanh x and list the hyperbolic identities.

2.26 Represent inverse hyperbolic functions in terms of logarithms.

2.27 Define complex number, its modulus , conjugate and list their properties.

2.28 Define the operations on complex numbers with examples.

2.29 Define amplitude of a complex number.

2.30 Represent the complex number in various forms like modulus-amplitude (polar) form, Exponential (Euler) form with examples.

2.31 Write DeMoivre's theorem (without proof) and illustrate with simple examples.

UNIT - III

Coordinate Geometry

C.O. 3 Find the equations and properties of straight lines, circles and conic sections in coordinate system.

L.O. 3.1 Write the different forms of a straight line – general form, point-slope form, slope-intercept form, two-point form, intercept form and normal form or perpendicular form.

3.2 Solve simple problems on the above forms.

3.3 Find distance of a point from a line, acute angle between two lines, intersection of two non-parallel lines and distance between two parallel lines.

3.4 Define locus of a point and define a circle.

3.5 Write the general equation of a circle and find the centre and radius.

3.6 Find the equation of a circle given (i) centre and radius, (ii) two ends of a diameter (iii) Centre and a point on the circumference (iv) three non collinear points.

3.7. Define a conic section.

3.8 Explain the terms focus, directrix, eccentricity, axes and latus rectum of a conic with illustrations.

3.9 Find the equation of a conic when focus, directrix and eccentricity are given.

3.10 Describe the properties of Parabola, Ellipse and Hyperbola in standard forms whose axes are along co-ordinate axes and solve simple examples on above.

Syllabus for Unit test-II completed

C.O.4 Evaluate the limits and derivatives of various functions.

L.O. 4.1 Explain the concept of limit and meaning of $\lim_{x\to a} f(x)=l$ and state the properties of limits.

4.2 Evaluate the limits of the type $\lim_{x\to l}\frac{f(x)}{g(x)}$ and $\lim_{x\to\infty}\frac{f(x)}{g(x)}$

4.3 Mention the Standard limits $\lim_{x\to a}\frac{x^n-a^n}{x-a}$, $\lim_{x\to 0}\frac{\sin x}{x}$, $\lim_{x\to 0}\frac{\tan x}{x}$, $\lim_{x\to 0}\frac{a^x-1}{x}$, $\lim_{x\to 0}\frac{e^x-1}{x}$, $\lim_{x\to 0}(1+x)^{\frac{1}{x}}$, $\lim_{x\to\infty}\left(1+\frac{1}{x}\right)^x$ (without proof) and solve the problems using these standard limits.

4.4 Explain the concept of continuity of a function at a point and on an interval with some examples whether a given function is continuous or not.

4.5 State the concept of derivative of a function y = f(x) – definition, first principle as $\lim_{h\to 0}\frac{f(x+h)-f(x)}{h}$ and also provide standard notations to denote the derivative of a function.

4.6 State the significance of derivative in scientific and engineering applications.

4.7 Find the derivatives of elementary functions like x^n , a^x, e^x, log x, sin x, cos x, tanx, Secx, Cosecx and Cot x using the first principles.

4.8 Find the derivatives of simple functions from the first principle .

4.9 State the rules of differentiation of sum, difference, scalar multiplication, product and quotient of functions with illustrative and simple examples.

4.10 Explain the method of differentiation of a function of a function (Chain rule) with illustrative examples.

4.11 Find the derivatives of Inverse Trigonometric functions and examples using the Trigonometric transformations.

4.12 Explain the method of differentiation of a function with respect to another function and also differentiation of parametric functions with examples.

4.13 Find the derivatives of hyperbolic functions.

4.14 Explain the procedures for finding the derivatives of implicit function with examples.

4.15 Explain the need of taking logarithms for differentiating some functions with examples like $[f(x)]^{g(x)}$.

4.16 Explain the concept of finding the higher order derivatives of second and third order with examples.

4.17 Explain the concept of functions of several variables, partial derivatives and difference between the ordinary and partial derivatives with simple examples.

4.18 Explain the definition of Homogenous function of degree n.

4.19 Explain Euler's theorem for homogeneous functions with applications to simple problems.

C.O. 5 Evaluate solutions for engineering problems using differentiation.

L.O. 5.1 State the geometrical meaning of the derivative as the slope of the tangent to the curve y=f(x) at any point on the curve.

5.2 Explain the concept of derivative to find the slope of tangent and to find the equation of tangent and normal to the curve y=f(x) at any point on it.

5.3 Find the lengths of tangent, normal, sub-tangent and sub normal at any point on the curve y=f(x) .

5.4 Explain the derivative as a rate of change in distance-time relations to find the velocity and acceleration of a moving particle with examples.

5.5 Explain the derivative as a rate measurer in the problems where the quantities like volumes, areas vary with respect to time- illustrative examples.

5.6 Define the concept of increasing and decreasing functions.

5.7 Explain the conditions to find points where the given function is increasing or decreasing with illustrative examples.

5.8 Explain the procedure to find the extreme values (maxima or minima) of a function of single variable- simple problems yielding maxima and minima.

5.9 Solve problems on maxima and minima in applications like finding areas, volumes etc.

5.10 Apply the concept of derivatives to find the errors and approximations in simple problems.

Syllabus for Unit test-III completed

CO/PO – Mapping

	PO1	**PO2**	**PO3**	**PO4**	**PO5**	**PO6**	**PO7**	**PSO1**	**PSO2**	**PSO3**
CO1	3	2	1	2				3	2	3
CO2	3	3	3	2				3	3	1
CO3	3	2	2	1				3	2	2
CO4	3	3	2	2				3	2	1
CO5	3	3	3	3				3	3	3
Avg	**3**	**2.6**	**2.5**	**2**				**3**	**2.4**	**2**

3 = Strongly mapped (High), **2 =**moderately mapped (Medium), **1 =**slightly mapped (Low)

Note:

PO5: Appropriate quiz programme may be conducted at intervals and duration as decided by concerned teacher.

PO6: Seminars on applications of mathematics in various engineering disciplines are to be planned and conducted.

PO7: Such activities are to be planned that students visit library to refer standard books on Mathematics and latest updates in reputed national and international journals, attending seminars, learning mathematical software tools.

PSO1: An ability to understand the concepts of basic mathematical concepts and to apply them in various areas like computer programming, civil constructions, fluid dynamics, electrical and electronic systems and all concerned engineering disciplines.

PSO2: An ability to solve the Engineering problems using latest software tool, along with analytical skills to arrive at faster and appropriate solutions.

PSO3: Wisdom of social and environmental awareness along with ethical responsibility to have a successful career as an engineer and to sustain passion and zeal for real world technological applications.

PO- CO – Mapping strength

PO no	Mapped with CO no	CO periods addressing PO in column I		Level (1,2 or 3)	Remarks
		No	%		
1	CO1, CO2, CO3,CO4,CO5	150	100%	3	>40% Level 3 Highly addressed 25% to 40% Level 2 Moderately addressed 5% to 25% Level 1 Low addressed <5% Not addressed
2	CO1, CO2, CO3,CO4,CO5	138	92%	3	
3	CO1, CO2, CO3,CO4,CO5	133	88.6%	3	
4	CO1, CO2, CO3,CO4,CO5	120	80%	3	
PSO 1	CO1, CO2, CO3,CO4,CO5	150	100%	3	
PSO 2	CO1, CO2, CO3,CO4,CO5	135	90%	3	
PSO 3	CO1, CO2, CO3,CO4,CO5	125	83.3%	3	

COMMON TO ALL BRANCHES

COURSE CONTENT

Unit-I

Algebra

1. Relations and Functions:

Define Set, Ordered pairs, Cartesian product, Relations, functions, domain & range of functions. Describe types of functions (in-to, many-to-one, one-one, onto and bijective) and inverse functions – examples.

2. Partial Fractions:

Define rational, proper and improper fractions of polynomials. Resolve rational fractions in to their partial fractions covering the types mentioned below.

$i)\quad \dfrac{f(x)}{(ax+b)(cx+d)}$ $ii)\quad \dfrac{f(x)}{(ax+b)^2(cx+d)}$

$iii)\quad \dfrac{f(x)}{(x^2+a^2)(bx+c)}$ $iv)\quad \dfrac{f(x)}{(x^2+a^2)(x^2+b^2)}$

3. Matrices:

Definition of a matrix, types of matrices-examples, algebra of matrices-equality of two matrices, sum, scalar multiplication and product of matrices. Transpose of a matrix-Symmetric, skew symmetric matrices-Minor, cofactor of an element-Determinant of a square matrix-Laplace's expansion, properties of determinants. Singular and non-singular matrices-Adjoint and multiplicative inverse of a square matrix- examples-System of linear equations in 3 variables-Solutions by Cramers's rule and Matrix inversion method-examples.

Unit-II

Trigonometry

4. Trigonometric ratios:

Definition of trigonometric ratios of any angle, values of trigonometric ratios at specified values, draw graphs of trigonometric functions, periodicity of trigonometric functions.

5. Compound angles:

Formulas of sin(A±B), cos(A±B), tan(A±B),cot(A±B),and related identities with problems.

6. Multiple and sub multiple angles:

Formulae for trigonometric ratios of multiple angles 2A, 3A and sub multipleangles A/2 with problems.

7. Transformations of products into sums or differences and vice versa simple problems.

8. Inverse trigonometric functions:

Definition, domains and ranges-basic properties- problems.

9. Trigonometric equations:

Concept of a solution, principal value and general solution of trigonometric equations: sinx =k , cosx= k, tanx =k, where k is a constant. Solutions of simple quadratic equations, equations involving usage of transformations- problems.

10.Properties of triangles:

Relation between sides and angles of a triangle- sine rule, cosine rule, tangent rule and projection rule-area of a triangle- problems.

11. Hyperbolic functions:

Definitions of hyperbolic functions, identities of hyperbolic functions, inverse hyperbolic functions and expression of inverse hyperbolic functions in terms of logarithms.

12. Complex Numbers:

Definition of a complex number, Modulus and conjugate of a complex number, Arithmetic operations on complex numbers, Modulus- Amplitue (polar) form , Exponential form (Euler form) of a complex number- Problems. DeMoivre's theorem.

UNIT-III

Coordinate geometry

13 Straight lines:various forms of straight lines, angle between lines, perpendicular distance from a point, distance between parallel lines-examples.

14. Circle:locus of a point, Circle, definition-Circle equation given (i) centre and radius, (ii) two ends of a diameter (iii) centre and a point on the circumference (iv) three non collinear points - general equation of a circle – finding centre, radius.

15. Definition of a conic section, equation of a conic when focus directrix and eccentricity are given. properties of parabola, ellipse and hyperbola in standard forms.

UNIT-IV

Differential Calculus:

16. Concept of Limit- Definition- Properties of Limits and Standard Limits -Simple Problems-Continuity of a function at a point- Simple Examples only.

17. Concept of derivative-Definition (first principle)- different notations-derivatives of elementary functions- problems. Derivatives of sum, product, quotient, scalar multiplication of functions - problems. Chain rule, derivatives of inverse trigonometric functions, derivative of a function with respect to another function, derivative of parametric functions, derivative of hyperbolic, implicit functions, logarithmic differentiation – problems in each case. Higher order derivatives - examples – functions of several variables - partial differentiation, Euler's theorem-simple problems.

UNIT-V

Applications of Derivatives:

18. Geometrical meaning of the derivative, equations of Tangent and normal to a curve at any point. Lengths of tangent, normal, sub tangent and subnormal to the curve at any point - problems.

19. Physical applications of the derivative – velocity, acceleration, derivative as a rate measure –Problems.

20. Applications of the derivative to find the extreme values – Increasing and decreasing functions, finding the maxima and minima of simple functions - problems leading to applications of maxima and minima.

21. Using the concept of derivative of a function of single variable, find the absolute error, relative and percentage errors and approximate values due to errors in measuring.

Textbook:

Engineering Mathematics-I, a textbook for first year diploma courses, prepared & prescribed by SBTET, AP.

Reference Books:

1. Shanti Narayan, A Textbook of matrices, S.Chand &Co.
2. Robert E. Moyer & Frank Ayers Jr., Schaum's Outline of Trigonometry, 4th Edition, Schaum's Series
3. M.Vygodsky, Mathematical Handbook, Mir Publishers, Moscow.
4. Frank Ayers & Elliott Mendelson, Schaum's Outline of Calculus, Schaum's Series.

Engineering Mathematics – I
Blue print

S. No	Chapter/ Unit title	No of Periods		Weightage Allotted	Marks wise distribution of weightage				Question wise distribution of weightage				COs mapped
	Unit - I : Algebra	**Theory**	**Practice**		**R**	**U**	**Ap**	**An**	**R**	**U**	**Ap**	**An**	
1	Relations and Functions	4	2	3	0	3	0	0	0	1	0	0	**CO 1**
2	Partial Fractions	3	2	3	0	3	0	0	0	1	0	0	**CO 1**
3	Matrices and Determinants	10	10	11	3	0	8	0	1	0	1	0	**CO 1**
	Unit - II : Trigonometry												
4	Trigonometric Ratios	1	1	0	0	0	0	0	0	0	0	0	**CO2**
5	Compound Angles	3	2	3	3	0	0	0	1	0	0	0	**CO2**
6	Multiple and Submultiple angles	4	4	3	0	3	0	0	0	1	0	0	**CO2**
7	Transformations	3	3	8	0	8	0	0	0	1	0	0	**CO2**
8	Inverse Trigonometric Functions	3	2										
9	Trigonometric Equations	3	2	8	0	0	8	0	0	0	1	0	**CO2**
10	Properties of triangles	3	2										
11	Hyperbolic Functions	1	1	0	0	0	0	0	0	0	0	0	**CO2**
12	Complex Numbers	4	2	3	3	0	0	0	1	0	0	0	**CO2**
	Unit III : Co-ordinate Geometry												
13	Straight Lines	4	2	3	3	0	0	0	1	0	0	0	**CO3**
14	Circle	3	2	8	0	8	0	0	0	1	0	0	**CO3**
15	Conic Sections	8	4										
	Unit – IV : Differential Calculus												
16	Limits and Continuity	4	2	3	0	3	0	0	0	1	0	0	**CO4**

17	Differentiation	17	10	14	3	11	0	0	1	2	0	0	**CO4**
	Unit - V : Applications of Differentiation												
18	Geometrical Applications	3	2	10	0	0	0	10	0	0	0	1	**CO5**
19	Physical Applications	2	2										
20	Maxima and Minima	3	4										
21	Errors and Approximations	2	1										
Total		**89**	**61**	**80**	**15**	**39**	**16**	**10**	**5**	**8**	**2**	**1**	

R: Remembering Type : 15 Marks
U: understanding Type : 39 Marks
Ap: Application Type : 16 Marks
An: Analysing Type : 10 Marks

Engineering Mathematics – I
Unit Test Syllabus

Unit Test	Syllabus
Unit Test-I	From L.O. 1.1 to L.O. 2.11
Unit Test-II	From L.O. 2.12 to L.O. 3.10
Unit Test-III	From L.O.4.1 to L.O. 5.10

Unit Test I **C –20, BM-102**

State Board of Technical Education and Training, A. P

First Year

Subject name: **Engineering Mathematics-I**

Sub Code: **BM-102**

Time : 90 minutes Max.marks:40

Part-A **16Marks**

Instructions: **(1) Answer all questions.**

(2) First question carries four marks and the remaining questions carry three marks each.

1. Answer the following.

   a. If $f(x) = x^2$ and domain $= \{-1, 0, 1\}$, then find range. (CO1)

   b. If $A = \begin{bmatrix} 1 & 2 \\ 3 & 4 \end{bmatrix}$, then find 3A. (CO1)

   c. Write the value of $Sin120^0$ (CO2)

   d. Write the formula for $\tan 2A$ in terms of $\tan A$ (CO2)

2. If $f : R \to R$ is defined by $f(x) = 3x - 5$, then prove that $f(x)$ is onto. (CO1)

3. If $A = \begin{bmatrix} 1 & 3 \\ 4 & -9 \end{bmatrix}$, $B = \begin{bmatrix} 2 & 4 \\ -3 & 1 \end{bmatrix}$ then find $2A + 3B$ (CO1)

4. Prove that $Sin^2 45^0 - Sin^2 15^0 = \frac{\sqrt{3}}{4}$ (CO2)

5. Prove that $\frac{\sin 2A}{1 - \cos 2A} = \cot A$ (CO2)

Part-B **3×8=24**

Instructions: **(1) Answer all questions.**
(2) Each question carries eight marks
(3) Answer should be comprehensive and the criterion for valuation is the content but not the length of the answer.

6. A) Resolve $\frac{2x}{(x-1)(x-3)}$ into partial fractions. (CO1)

or

B) Resolve $\frac{x+4}{x^2-3x+2}$ into partial fractions. (CO1)

7. A) Using Cramer's rule to solve
$x-y+z=2, 2x+3y-4z=-4, 3x+y+z=8$ (CO1)

or

B) Prove that $\begin{vmatrix} bc & b+c & 1 \\ ca & c+a & 1 \\ ab & a+b & 1 \end{vmatrix} = (a-b)(b-c)(c-a)$ (CO1)

8. A) Find the adjoint of Matrix $\begin{bmatrix} 1 & 2 & -2 \\ -1 & 3 & 5 \\ 2 & 7 & -4 \end{bmatrix}$ (CO1)

or

B) If $A=\begin{bmatrix} 2 & 3 & 4 \\ 5 & 7 & 9 \\ -2 & 1 & 3 \end{bmatrix}$; $B=\begin{bmatrix} 3 & 1 & -5 \\ 2 & 1 & 4 \\ 0 & 3 & 1 \end{bmatrix}$, find AB and BA and verify if $AB=BA$.

(CO1)

-o0o-

Unit Test II **C –20, BM-102**

State Board of Technical Education and Training, A. P

First Year

Subject name: **Engineering Mathematics-I**

Sub Code: **BM- 102**

Time : 90 minutes Max.marks:40

Part-A **16Marks**

Instructions: **(1) Answer all questions.**

(2) First question carries four marks and the remaining questions carry three marks each

1. Answer the following.

   a. $\sin C + \sin D = 2\cos\left(\frac{C+D}{2}\right)\sin\left(\frac{C-D}{2}\right)$: State TRUE/FALSE (CO2)

   b. If $z = 2+3i$, then find $|z|$ (CO2)

   c. $\sinh x = \frac{e^x - e^{-x}}{2}$: State TRUE/FALSE (CO2)

   d. Write the eccentricity of rectangular hyperbola. (CO3)

2. Express $(3-4i)(7+2i)$ in terms of $a+ib$ (CO2)

3. Find the perpendicular distance from $(1,1)$ to the line $2x+3y-1=0$ (CO3)

4. Find the angle between lines $2x-y+3=0$ and $x+y-2=0$ (CO3)

5. Find the centre and radius of the circle $x^2+y^2-2x+4y-4=0$ (CO3)

Part-B **3×8=24**

Instructions: **(1) Answer all questions.**

(2) Each question carries eight marks

(3) Answer should be comprehensive and the criterion for valuation is the content but not the length of the answer.

6. A) Prove that $\frac{\sin 2\theta + \sin 4\theta + \sin 6\theta}{\cos 2\theta + \cos 4\theta + \cos 6\theta} = \tan 4\theta$. (CO2)

or

B) Prove that $\tan^{-1}\frac{1}{2} + \tan^{-1}\frac{1}{5} + \tan^{-1}\frac{1}{8} = \frac{\pi}{4}$ (CO2)

7. A) Solve $2\sin^2\theta - \sin\theta - 1 = 0$ (CO2)

or

B) In any ΔABC, If $\angle B = 60^0$ then $\frac{c}{a+b} + \frac{a}{b+c} = 1$ (CO2)

8. A) Find the equation of circle with $(2,3)$ and $(6,9)$ as the end points of diameter and also find centre and radius of circle. (CO3)

or

B) Find the equation of ellipse whose focus is $(1,-1)$, directrix is $x - y + 3 = 0$ and eccentricity is1/2. (CO3)

-o0o-

Unit Test III **C –20, BM-102**

State Board of Technical Education and Training, A. P

First Year

Subject name: **Engineering Mathematics-I**

Sub Code: **BM-102**

Time : 90 minutes Max.marks:40

Part-A **16Marks**

Instructions: **(1) Answer all questions.**

(2) First question carries four marks and the remaining questions carry three marks each

1. Answer the following.

   a. Find $\lim_{x\to 1}\frac{x^2+1}{x+5}$ (CO4)

   b. $\lim_{\theta\to 0}\frac{\sin 2\theta}{\theta}=2$: State TRUE/FALSE (CO4)

   c. $\frac{d}{dx}\left(3\tan^{-1}x\right)=?$ (CO4)

   d. Formula for percentage error in x is _____ (CO5)

2. Evaluate $\lim_{x\to 2}\frac{x^5-32}{x^2-4}$ (CO4)

3. Find the derivative of $3\tan x-4\log x+7^x$ w.r.t. x (CO4)

4. Differentiate $x^2\sin x$ w.r.t. x (CO4)

5. Find the derivative of $\frac{2x+3}{3x+4}$ (CO4)

Part-B **3×8=24**

Instructions: **(1) Answer all questions.**

(2) Each question carries eight marks

(3) Answer should be comprehensive and the criterion for valuation is the content but not the length of the answer.

6. A) Find the derivative of $\sin^{-1}\left(\frac{2x}{1+x^2}\right)$ w.r.t. $\tan^{-1}\left(\frac{2x}{1-x^2}\right)$. (CO4)

or

B) Find $\frac{dy}{dx}$ if $y = x^{\cos x}$ (CO4)

7. A) Verify Euler's theorem when $u(x, y) = \frac{x^4 + y^4}{x - y}$ (CO4)

or

B) Find the equation of tangent and normal to the curve $3y = x^2 - 6x + 17$ at $(4, 3)$ (CO5)

8. A) Circular patch of oil spreads on water and the area is growing at the rate of $8 sqcm/\min$. How fast is the radius increasing when radius is $5cm$. (CO5)

or

B) Find the maxima and minima values of $f(x) = x^3 - 6x^2 + 9x + 15.$ (CO5)

-o0o-

END-EXAM MODEL PAPERS

STATE BOARD OF TECHNICAL EDUCATION, A.P

ENGINEERING MATHEMATICS BM- 102

TIME : 3 HOURS **MODEL PAPER- I** **MAX.MARKS : 80M**

PART-A

Answer All questions. Each question carries THREE marks. **10x3=30M**

1. If $A=\left\{0,\frac{\pi}{6},\frac{\pi}{4},\frac{\pi}{3},\frac{\pi}{2}\right\}$ and $f:A\to B$ is a function such that $f(x)=\cos x$, then find the range of f. **CO 1**

2. Resolve the function $\frac{x}{(x-1)(x-2)}$ into partial fractions. **CO 1**

3. If $\mathrm{A}=\begin{bmatrix}3 & 9 & 0\\ 1 & 8 & -2\end{bmatrix}$ and $\mathrm{B}=\begin{bmatrix}4 & 0 & 2\\ 7 & 1 & 4\end{bmatrix}$, find $\mathrm{A}+\mathrm{B}$ and $\mathrm{A}-\mathrm{B}$. **CO1**

4. Show that $\frac{\cos 16^0+\sin 16^0}{\cos 16^0-\sin 16^0}=\tan 61^0$. **CO2**

5. Prove that $\frac{\sin 2\theta}{1-\cos 2\theta}=\cot\theta$. **CO2**

6. Find the modulus of the complex number $\left(\frac{1-i}{2+i}\right)$. **CO2**

7. Find the distance between parallel lines $x+2y+3=0$ and $x+2y+8=0$. **CO3**

8. Find $\lim_{x\to 0}\frac{\sin 77x}{\sin 11x}$. **CO4**

9. Differentiate $3\tan x-4\log x-7x^2$ w.r.t. x. **CO4**

10. If $x=at^2, y=2at$, then find $\frac{dy}{dx}$. **CO4**

PART-B

Answer All questions. Each question carries EIGHT marks. 5x8=40M

11 A) Find the inverse of the matrix $\begin{bmatrix} 3 & -3 & 4 \\ 2 & -3 & 4 \\ 0 & -1 & 1 \end{bmatrix}$. **CO1**

Or

B) Solve the system of equations $x+y+z=6, x-y+z=2$ and $2x-y+3z=9$ by Cramer's rule. **CO1**

12 A) If $\cos x+\cos y=\frac{3}{5}$ and $\cos x-\cos y=\frac{2}{7}$, then show that **CO2**

$21\tan\left(\frac{x-y}{2}\right)+10\cot\left(\frac{x+y}{2}\right)=0.$

Or

B) If $\tan^{-1}x+\tan^{-1}y+\tan^{-1}z=\pi$ then show that $x+y+z=xyz.$ **CO2**

13 A) Solve $\sqrt{3}\cos\theta-\sin\theta=1.$ **CO2**

Or

B) In any $\Delta ABC,$ Show that $\cot\frac{A}{2}+\cot\frac{B}{2}+\cot\frac{C}{2}=\frac{s^2}{\Delta}.$ **CO2**

14 A) Find the equation of the circle with $(4,2)$ and $(1,5)$ as the two ends of its diameter and also find its centre and radius. **CO3**

Or

B) Find the centre, vertices, equation of axes, lengths of axes, eccentricity, foci, equations of directrices and length of latus rectum of the ellipse $4x^2+16y^2=1.$ **CO3**

15 A) Find the derivative of $\sin^{-1}\left(\frac{2x}{1+x^2}\right)$ w.r.t. $\tan^{-1}\left(\frac{2x}{1-x^2}\right)$ **CO4**

Or

B) If $u=\tan^{-1}\left(\frac{x^3-y^3}{x+y}\right)$, then prove that $x\frac{\partial u}{\partial x}+y\frac{\partial u}{\partial y}=\sin 2u.$ **CO4**

PART-C

Answer the following question. Question carries TEN marks. 1x10=10M

16. The sum of two numbers is 24. Find them so that the sum of their squares is minimum. **CO5**

STATE BOARD OF TECHNICAL EDUCATION, A.P

ENGINEERING MATHEMATICS BM- 102

TIME : 3 HOURS **MODEL PAPER- II** **MAX.MARKS : 80M**

PART-A

Answer All questions. Each question carries THREE marks. **10x3=30M**

1. If $f : R \to R$ is a bijective function such that $f(x) = ax + b$, then find $f^{-1}(x)$. **CO 1**

2. Resolve the function $\frac{1}{(x+1)(x-2)}$ into partial fractions. **CO 1**

3. If $A = \begin{bmatrix} 0 & -1 & 3 \\ 1 & 0 & 7 \\ -3 & x & 0 \end{bmatrix}$ is a skew-symmetric matrix, find the value of x. **CO 1**

4. Find the value of $\sin^2 82\frac{1}{2}^0 - \sin^2 22\frac{1}{2}^0$. **CO2**

5. Prove that $\frac{\cos 3A}{2\cos 2A - 1} = \cos A$. **CO2**

6. Find the conjugate of the complex number $(3-2i).(4+7i)$ **CO2**

7. Find the equation of the line passing through the points $(1,2)$ and $(3,-4)$. **CO3**

8. Find $\lim_{x \to 2} \frac{x^5 - 32}{x - 2}$. **CO4**

9. Differentiate $\sqrt{x} - \sec x + \log x$ w.r.t. x. **CO4**

10. If $u(x, y) = x^3 - 3axy + y^3$, then find $\frac{\partial u}{\partial x}$ and $\frac{\partial u}{\partial y}$. **CO4**

PART-B

Answer All questions. Each question carries EIGHT marks. 5x8=40M

11 A) Show that $\begin{vmatrix} 1 & 1 & 1 \\ a & b & c \\ a^2 & b^2 & c^2 \end{vmatrix} = (a-b)(b-c)(c-a).$ **CO1**

Or

B) Solve the system of equations $x+2y+3z=6, 3x-2y+4z=5$ and $x-y-z=-1$ using matrix inversion method. **CO1**

12 A) Prove that $\frac{\sin 2\theta + \sin 4\theta + \sin 6\theta}{\cos 2\theta + \cos 4\theta + \cos 6\theta} = \tan 4\theta.$ **CO2**

Or

B) Prove that $\tan^{-1}\frac{1}{3} + \tan^{-1}\frac{1}{5} + \tan^{-1}\frac{1}{7} + \tan^{-1}\frac{1}{8} = \frac{\pi}{4}.$ **CO2**

13 A) Solve $2\cos^2\theta - 3\cos\theta + 1 = 0.$ **CO2**

Or

B) In any $\Delta ABC,$ Show that $\sum a^3 \cos(B-C) = 3abc.$ **CO2**

14 A) Find the equation of the circle passing through the points $(0,0),(6,0)$ and $(0,8).$ **CO3**

Or

B) Find the equation of the rectangular hyperbola whose focus is $(1,2)$ and directrix is $3x+4y-5=0.$ **CO3**

15 A) If $\sin y = x\sin(a+y),$ then prove that $\frac{dy}{dx} = \frac{\sin^2(a+y)}{\sin a}.$ **CO4**

Or

B) If $y = \tan^{-1} x,$ then prove that $(1+x^2)y_2 + 2xy_1 = 0.$ **CO4**

PART-C

Answer the following question. Question carries TEN marks. 1x10=10M

16 Show that the semi-vertical angle of the cone of maximum volume and of given slant height is $\tan^{-1}\sqrt{2}.$ **CO4**

Course code	Course Title	No. of Periods per week	Total No. of Periods	Marks for FA	Marks for SA
BM-103	Engineering Physics	4	120	20	80

S. No	Unit Title/Chapter	No of Periods	COs Mapped
1	Units and Dimensions	08	CO1
2	Elements of Vectors	12	CO1
3	Dynamics	12	CO2
4	Friction	10	CO2
5	Work, Power and Energy	12	CO3
6	Simple harmonic motion	12	CO3
7	Heat and Thermodynamics	12	CO4
8	Sound	10	CO4
9	Properties of matter	10	CO5
10	Electricity and Magnetism	12	CO5
11	Modern physics	10	CO5
Total		**120**	

Course Title: Engineering Physics	
Course Objectives	1. To familiarize with the concepts of Physics involved in the process of various Engineering, Industrial and Daily life Applications. 2. To understand and apply the basic principles of physics in the field of engineering and technology to familiarize certain natural phenomenon occurring in the day to day life 3. To reinforce theoretical concepts by conducting relevant experiments/exercises

Course Outcomes	CO1	Explain S.I units and dimensions of different physical quantities, basic operations among vector quantities.
	CO2	Explain the motion of objects moving in one dimension and two dimensions, the causes of motion and hindrance to the motion of the objects especially with respect to friction.
	CO3	Explain the mechanical energy of bodies like PE, KE and conservation law of energy, the properties of simple harmonic motion.
	CO4	Explain gas laws, ideal gas equation, Isothermal and adiabatic processes, Specific heats, to study the laws of thermodynamics. Causes, consequences and methods to minimise noise pollution, explain beats, Doppler effect, Reverberation, echoes.
	CO5	Explain certain properties of solids, liquids like elastic properties, viscosity and surface tension. Explain Ohm's law, to study Kirchoff's laws, to study the principle of Wheatstone's bridge and its application to meter bridge. To study the magnetic force and understand magnetic field. To compute magnetic field strength on axial and equatorial lines of a bar magnet. To familiarise with modern topics like photoelectric effect, optical fibres, superconductivity and nanotechnology.

COS, POS, PSOS MAPPING

- POs mapping strength (as per given table)

	PO1	PO2	PO3	PO4	PO5	PO6	PO7	PSO1	PSO2	PSO3
CO1	3					1		1	1	1
CO2	3		2					1	1	
CO3	3		2					1		
CO4	3	2			2				2	2
CO5	3			2			2	1	1	

3 = strongly mapped 2= moderately mapped 1= slightly mapped

Note:

The gaps in CO and PO mapping will be achieved by one or more appropriate activities from the following:

i) Seminars ii) Tutorials iii) Guest lectures iv) Assignments v) Quiz competitions vi) Industrial visits vii) Tech Fest viii) Mini project ix) Group discussion x) Virtual classes xi) Library visit for e-books

Learning Outcomes

1.0 Concept of Units and dimensions

1.1 Explain the concept of Units, Physical quantity, Fundamental physical quantities and Derived physical quantities

1.2 Define unit, fundamental units and derived units, State SI units with symbols

1.3 State Multiples and submultiples in SI system, State Rules of writing S.I. units, State advantages of SI units

1.4 Define Dimensions, Write Dimensional formulae of physical quantities

1.5 List dimensional constants and dimensionless quantities
1.6 State the principle of homogeneity of dimensions
1.7 State the applications and limitations of dimensional analysis
1.8 Errors in measurement, Absolute error, relative error, percentage error, significant figures
1.9 Solve problems

2.0 Concept of Elements of Vectors

2.1 Explain the concept of scalars, Vectors and give examples
2.2 Represent vectors graphically, Classify the Vectors, Resolve the vectors
2.3 Determine the resultant of a vector by component method, represent a vector in Space using unit vectors (i, j, k)
2.4 State and explain triangle law, parallelogram law, and polygon law of addition of Vectors
2.5 Define Dot product of two vectors with examples (Work done, Power), mention the Properties of dot product
2.6 Define cross product of two vectors with examples (Torque, Linear velocity) Mention the properties of Cross product.
2.7 Solve the related numerical problems

3.0 Concept of Dynamics

3.1 Write the equations of motion in a straight line. Explain the acceleration due to Gravity.
3.2 Explain vertical motion of a body and derive expressions for a) Maximum Height, b) Time of ascent, c) time of descent, and d) time of flight
3.3 Derive height of a tower when a body projected vertically upwards from the top of a tower.
3.4 Explain projectile motion with examples
3.5 Explain horizontal projection and derive an expression for the path of a projectile in horizontal projection
3.6 Explain oblique projection and derive an expression for it. Derive formulae for a) Maximum Height b) time of ascent c) time of descent and d) time of flight e) Horizontal Range, f) Maximum range
3.7 Define force, momentum, angular displacement, angular velocity, angular acceleration, angular momentum, moment of inertia, torque
3.8 Solve the related numerical problems

4.0 Concept of Friction

4.1 Define friction and classify the types of friction.
4.2 Explain the concept of normal reaction.
4.3 State the laws of friction.
4.4 Define coefficients of friction, Angle of friction and angle of repose.
4.5 Derive expressions for acceleration of a body on a rough inclined plane. (Upwards and downwards)
4.6 List the advantages and disadvantages of friction.
4.7 Mention the methods of minimizing friction.
4.8 Explain why it is easy to pull a lawn roller than to push it.
4.9 Solve the related numerical problems.

5.0 Concepts of Work, Power, and Energy

5.1 Define the terms Work, Power and Energy. State SI units and dimensional Formulae.

5.2 Define potential energy and give examples, derive an expression for potential energy.

5.3 Define Kinetic energy and give examples, derive an expression for kinetic energy.

5.4 State and derive Work-Energy theorem.

5.5 Derive the relation between Kinetic energy and momentum.

5.6 State the law of conservation of energy and verify it in the case of a freely falling body.

5.7 Solve the related numerical problems.

6.0 Concepts of Simple harmonic motion

6.1 Define Simple harmonic motion, Give examples, state the conditions.

6.2 Explanation of uniform circular motion of a particle is a combination of two perpendicular S.H.M.s.

6.3 Derive expressions for displacement, velocity, acceleration, Frequency, Time period of a particle executing SHM.

6.4 Define phase of SHM.

6.5 Define Ideal simple pendulum and derive expression for time period of simple pendulum.

6.6 State the laws of motion of simple pendulum.

6.7 Solve the related numerical problems.

7.0 Concept of heat and thermodynamics

7.1 Explain the concept of expansion of gases

7.2 State and explain Boyle's and Charles laws.

7.3 Define absolute zero temperature, absolute scale of temperature

7.4 Define ideal gas and distinguish from real gas

7.5 Derive Ideal gas equation. Define specific gas constant and universal gas constant, write S.I unit and dimensional formula. Calculate the value of R.

7.6 Explain why universal gas constant is same for all gases

7.7 State and explain isothermal process and adiabatic process

7.8 State first and second laws of thermodynamics and state applications

7.9 Define specific heats and molar specific heats of a gas, Derive $C_P - C_V = R$

7.10 Solve the relevant numerical problems

8.0 Concept of Sound

8.1 Concept of the sound, Wave motion. (longitudinal and transverse wave)

8.2 Distinguish between musical sound and noise.

8.3 Explain noise pollution and state SI unit for intensity level of sound.

8.4 Explain causes, effects and methods of minimizing of noise pollution.

8.5 Explain the phenomenon of beats state the applications.

8.6 Define Doppler effect, list the applications.

8.7 Define reverberation and reverberation time and write Sabine's formula.

8.8 Define and explain echoes state its applications.

8.9 State conditions of good auditorium.

8.10 Solve the related numerical problems.

9.0 Concepts of properties of matter

9.1 Explain the terms elasticity, stress, strain and types of stress and strain.
9.2 State and explain Hooke's law.
9.3 Definitions of Modulus of elasticity, Young's modulus(Y), Bulk modulus (K), Rigidity modulus (n),Poisson's ratio (σ),
9.4 Define surface tension and give examples.
9.5 Explain Surface tension with reference to molecular theory.
9.6 Define angle of contact and capillarity and write formula for Surface Tension.
9.7 Explain the concept of viscosity, give examples, write Newton's formula.
9.8 Define co-efficient of viscosity and write its units and dimensional formula and State Poiseulle's equation for Co-efficient of viscosity.
9.9 Explain the effect of temperature on viscosity of liquids and gases.
9.10 Solve the related numerical problems.

10. Concepts of Electricity and Magnetism

10.1 Explain Ohm's law in electricity and write the formula.
10.2 Define specific resistance, conductance and state their units.
10.3 Explain Kichoff's laws.
10.4 Describe Wheatstone's bridge with legible sketch.
10.5 Describe Meter Bridge for the determination of resistivity with a circuit diagram.
10.6 Explain the concept of magnetism. State the Coulomb's inverse square law of Magnetism.
10.7 Define magnetic field and magnetic lines of force and write the properties of magnetic lines of force.
10.8 Derive an expression for the moment of couple on a bar magnet placed in a uniform magnetic field.
10.9 Derive equations for Magnetic induction field strength at a point on the axial line and on the equatorial line of a bar magnet.
10.10 Solve the related numerical problems

11.0 Concepts of modern physics

11.1 State and explain Photo-electric effect and Write Einstein's photo electric Equation.
11.2 State laws of photo electric effect.
11.3 Explain the Working of photo electric cell, write its applications.
11.4 Recapitulation of refraction of light and its laws, critical angle, total Internal Reflection.
11.5 Explain the principle and working of Optical fiber, mention different types of Optical fiber, state the applications.
11.6 Define super conductor and super conductivity and mention examples.
11.7 State the properties of super conducting materials and list the applications.
11.8 Nanotechnology definition, nano materials, applications.

COURSECONTENT

1. Units and Dimensions:

Introduction, Physical quantity, Fundamental and Derived quantities, Fundamental and Derived units, SI units, Multiples and Sub multiples, Rules for writing S.I. units, Advantages of SI units. Dimensions and Dimensional formulae, Dimensional constants and Dimensionless quantities, Principle of homogeneity, Advantages and limitations of dimensional analysis, Errors in measurement, Absolute error, relative error, percentage error, significant figures, Problems.

2. Elements of Vectors:

Scalars and Vectors, Types of vectors (Proper Vector, Null Vector, Unit Vector, Equal, Negative Vector, Like Vectors, Co-Initial Vectors, Co-planar Vectors and Position Vector).Addition of vectors, Representation of vectors, Resolution of vectors, Parallelogram, Triangle and Polygon laws of vectors, Subtraction of vectors, Dot and Cross products of vectors-Problems.

3. Dynamics

Introduction-Concept of acceleration due to gravity-Equations of motion for a freely falling body and for a body thrown up vertically- Projectiles- Horizontal and Oblique projections- Expressions for maximum height, time of flight, range-Define force, momentum, angular displacement, angular velocity, angular acceleration, angular momentum, moment of inertia, torque–problems.

4. Friction:

Introduction to friction- Causes- Types of friction- Laws of friction- Angle of repose-Angle of friction-rough inclined plane- Advantages and disadvantages of friction-Methods of reducing friction–Problems.

5. Work, Power and Energy:

Work, Power and Energy- Definitions and explanation- potential energy- kinetic energy-Derivations of Potential and Kinetic energies-K.E and Momentum relation - Work-Energy theorem- Law of Conservation of energy- Problems.

6. Simple Harmonic Motion:

Introduction- Conditions of SHM- Definition- Examples- Expressions for displacement, velocity, acceleration, Time period, frequency and phase in SHM- Time period of a simple pendulum- Laws of simple pendulum-seconds pendulum-Problems.

7. Heat and Thermodynamics:

Expansion of Gases, Boyle's law, absolute scale of temperature- Charles laws- Ideal gas equation-Universal gas constant- Differences between gas constant(r) and universal gas constant(R),Isothermal and adiabatic processes, Laws of thermodynamics, Specific heats - molar specific heats of a gas -Different modes of transmission of heat ,laws of thermal conductivity, Coefficient of thermal conductivity-Problems.

8. Sound:

Sound- Nature of sound- Types of wave motion -musical sound and noise- Noise pollution – Causes &effects- Methods of reducing noise pollution- Beats- Doppler effect- Echo- Reverberation-Reverberation time-Sabine 's formula-Conditions of good auditorium- Problems.

9. Properties of matter

Definition of Elasticity –Definition of stress and strain -the units and dimensional formulae for stress and strain-The Hooke's law-Definitions of Modulus of elasticity, Young's modulus(Y), Bulk modulus(K), Rigidity modulus (n),Poisson's ratio (σ), relation between Y, K, n and σ(equations only no derivation)

Definition of surface tension-Explanation of Surface tension with reference to molecular theory - Definition of angle of contact -Definition of capillarity -The formula for surface tension based on capillarity - Explanation of concept of Viscosity - Examples for surface tension and Viscosity - Newton's formula for viscous force- Definition of co-efficient of viscosity- The effect of temperature on viscosity of liquids and gases - Poiseuille's equation for Co-efficient of viscosity- The related numerical problems.

10. Electricity & Magnetism:

Ohm's law and explanation, Specific resistance, Kirchoff's laws, Wheatstone's bridge, Meter bridge, Coulomb's inverse square law, magnetic field, magnetic lines of force, magnetic induction field strength- magnetic induction field strength at a point on the axial line - magnetic induction field strength at a point on the equatorial line–problems.

11. Modern Physics;

Photoelectric effect –Einstein's photoelectric equation-laws of photoelectric effect-photoelectric cell–Applications of photo electric effect- Total internal reflection- fiber optics- -principle and working of an optical fiber-types of optical fibers - Applications of optical fibers-superconductivity–applications-Nanotechnology definition, nano materials, applications

REFERENCEBOOKS

1. Telugu Academy (English version)	Intermediate physics Volume-I & 2
2. Dr. S. L. Guptha and Sanjeev Guptha	Unified physics Volume 1,2,3 and 4
3. Resnick& Holiday	Text book of physics Volume I
4. Dhanpath Roy	Text book of applied physics
5. D.A Hill	Fiber optics
6. XI & XII Standard	NCERT Text Books

➢ **Model Blue Print with Weightage for Blooms category and questions for chapter and Cos mapped**

S. No	Unit Title/Chapter	No of Periods	Weightage of marks	Marks wise distribution of Weightage				Question wise distribution of Weightage				Mapped with CO
				R	U	Ap	An	R	U	Ap	An	
1	Units and Dimensions	08	03	3	0	0	0	1	0	0	0	CO1
2	Elements of Vectors	12	11	3	8	0	0	1	1	0	0	CO1
3	Dynamics	12	11	3	8	0	0	1	1	0	*	CO2
4	Friction	10	11	3	0	8	0	1	0	1	0	CO2
5	Work, Power and Energy	12	11	3	8	0	0	1	1	0	0	CO3
6	Simple harmonic motion	12	11	3	8	0	0	1	1	0	*	CO3
7	Heat and Thermodynamics	12	11	0	8	3	0	0	1	1	*	CO4
8	Sound	10	11	0	8	3	0	0	1	1	0	CO4
9	Properties of matter	10	08	0	8	0	0	0	1	0	0	CO5
10	Electricity and Magnetism	12	14	6	0	8	0	2	0	1	0	CO5
11	Modern physics	10	08	0	8	0	0	0	1	0	0	CO5
Total		**120**	**110**	**24**	**64**	**22**	**0**	**8**	**8**	**4**	***10**	

***One question of HOTs for 10 marks from any of the unit title 3 or 6 or 7**

➢ **Table specifying the scope of syllabus to be covered for Unit Tests**

Unit Test	Learning outcomes to be covered
Unit Test – 1	From 1.1 to 4.9
Unit Test – 2	From 5.1 to 7.10
Unit Test – 3	From 8.1 to 11.8

- **Model question paper for Unit Tests I,II,III with COs mapped**

UNIT TEST –I

Model Question Paper (C-20)

ENGINEERING PHYSICS (BM-103)

TIME: 90 minutes Total Marks: 40

PART-A **16 Marks**

Instructions: (1) Answer all questions.
(2) First question carries 4 marks and others carry 3 marks each.
(3) Answers for the Question numbers 2 to 5 should be brief and straight to the point and shall not exceed five simple sentences.

1. i) The dimensional formula of force is _____ **(CO1)**
   ii) Which of the following is a scalar [ ] **(CO1)**
   a) force b) work c) displacement d) velocity

   iii) we can add a scalar to a vector (Yes / No) **(CO1)**
   iv) Friction is a self-adjusting force. [True / False] **(CO2)**
2. Define dot product. Give one example. **(CO1)**
3. A force of 150 N acts on a particle at an angle of 30° to the horizontal. Find the horizontal and vertical components of force. **(CO1)**
4. Define projectile. Give two examples. **(CO2)**
5. It is easier to pull a lawn roller than to push it. Explain **(CO2)**

PART—B **3x8=24**

Instructions: (1) Answer all questions. Each question carries 8marks.
(2) Answer should be comprehensive and the criteria for evaluation is content but not the length of the answer.

6) (A) Derive an expression for magnitude and direction of resultant of two Vectors using parallelogram law of vectors **(CO1)**

OR

(B) Write any four properties of dot product and any four properties of Cross product **(CO1)**

7) (A) Show that path of a projectile is a parabola in case of oblique Projection. **(CO2)**

OR

(B) Derive the expression for range and time of flight of a projectile **(CO2)**

8) (A) State and explain polygon law of vector addition with a neat diagram **(CO1)**

OR

(B) Derive the equation for acceleration of a body on a rough inclined plane **(CO2)**

UNIT TEST –II

Model Question Paper (C-20)

ENGINEERING PHYSICS (BM–103)

TIME: 90 minutes Total Marks: 40

PART –A **16 Marks**

Instructions: (1) Answer all questions.

(2) First question carries 4 marks and others carry 3 marks each.

(3) Answers for the Question numbers 2 to 5 should be brief and

Straight to the point and shall not exceed five simple sentences.

1) i) The value of 100^0 C is equal to _____ in Kelvin scale of temperature **(CO4)**

ii) Write the S.I unit of power **(CO3)**

iii) A simple pendulum be used in artificial satellite (Yes / No) **(CO3)**

iv) Specific heat of a gas is constant for all gases in nature [True / False] **(CO4)**

2. Derive the relation between momentum and kinetic energy **(CO3)**

3. A girl is swinging by sitting in a swing, how the frequency changes if she stands in the swing. **(CO3)**

4. Write the physical significance of universal gas constant. **(CO4)**

5. A body is projected in to the air in the vertically upward direction, find the height at which its potential and kinetic energies are equal. **(CO3)**

PART—B **3x8=24 Marks**

Instructions: (1) Answer all questions. Each question carries 8marks.

(2) Answer should be comprehensive and the criteria for Evaluation is content but not the length of the answer.

6) (A) State the law of conservation of energy and verify it in case of a freely falling body. **(CO3)**

(OR)

(B) State and prove work energy theorem. **(CO3)**

7) (A) Define ideal simple pendulum and derive the equation for time period of a simple pendulum **(CO3)**

OR

(B) State the conditions for S.H.M, derive the equation for velocity for a Particle in S.H.M. **(CO3)**

8) (A) Define ideal gas, show that for an ideal gas the difference in specific heats is equal to universal gas constant **(CO4)**

(OR)

(B) State gas laws and derive the ideal gas equation **(CO4)**

UNIT TEST –III

Model Question Paper (C-20)

ENGINEERING PHYSICS (BM–103)

TIME: 90 minutes Total Marks: 40

PART –A 16 Marks

Instructions: (1) Answer all questions.

(2) First question carries 4 marks and others carry 3 marks each.

(3) Answers for the Question numbers 2 to 5 should be brief and straight to the point and shall not exceed five simple sentences.

1) i) Photo electric cell converts light energy in to _____ energy **(CO5)**

ii) What is elastic limit ? **(CO5)**

iii) SI unit of Specific resistance is ---------- **(CO5)**

iv) Inside a bar magnet magnetic line of force will travel from North pole to South pole [True / False] **(CO5)**

2. Distinguish between Musical sound and Noise **(CO4)**

3. What is the effect of temperature on Viscosity of liquids and gases **(CO5)**

4. The values of resistances P, Q, R are 50 Ω, 10Ω, 15 Ω respectively in the balanced condition of Wheatstone bridge, find the unknown resistance **(CO5)**

5. What is nanotechnology and write any two uses. **(CO5)**

PART—B 3x8=24 Marks

Instructions: (1) Answer all questions. Each question carries 8marks.

(2) Answer should be comprehensive and the criteria for evaluation is content but not the length of the answer.

6) (A) Explain Surface Tension based on the molecular theory **(CO5)**

(OR)

(B)Define Reverberation and Reverberation Time. Derive Sabine formula for reverberation time. **(CO4)**

7) (A) Derive the balancing condition of Wheatstone bridge with neat circuit Diagram. **(CO5)**

(OR)

(B) Derive an expression for the magnetic induction field strength at a point on the equatorial line of a bar magnet. **(CO5)**

8) (A) Describe an experiment to determine the specific resistance of a wire using meter bridge. **(CO5)**

(OR)

(B) Explain the principle and working of an optical fiber. **(CO5)**

BOARD DIPLOMA EXAMINATION, (C–20)
FIRST YEAR EXAMINATION
BM–103, ENGINEERING PHYSICS

Time : 3 hours] [Total Marks : 80M

PART—A **3×10=30**

Instructions: (1) Answer all questions.
(2) Each question carries three marks.
(3) Answers should be brief and straight to the point and shall not exceed five simple Sentences.

1. Write the dimensional formula of the following physical quantities **(CO1)**
   (a) Velocity (b) Force (c) Angular momentum
2. Write any three properties of scalar product. **(CO1)**
3. Define projectile. Give two examples. **(CO2)**
4. It is easier to pull a lawn roller than to push it. Explain. **(CO2)**
5. Define potential energy and kinetic energy. **(CO3)**
6. For a body in simple harmonic motion velocity at mean position is 4m/s, if the time period is 3.14 s, find its amplitude. **(CO3)**
7. State first and second laws of thermodynamics. **(CO4)**
8. Write any three conditions of good auditorium **(CO4)**
9. Define ohmic and non-ohmic conductors. **(CO5)**
10. State Coulomb's inverse square law of magnetism. **(CO5)**

PART—B **8 ×5= 40**

Instructions: (1) Each question carries eight marks.
(2) Answers should be comprehensive and the criterion for valuation is the content But not the length of the answer.

11. A) Derive an expression for magnitude and direction of the resultant of two vectors using Parallelogram law of vectors. **(CO1)**

OR

B) Show that path of a projectile is parabola in case of oblique projection and derive expression for maximum height. **(CO2)**

12. A) Derive expression for acceleration of a body sliding downwards on a rough inclined plane**.** **(CO2)**

OR

B) Verify the law of conservation of energy in case of a freely falling body**.** **(CO3)**

13. A) Derive an expression for velocity and acceleration of a particle performing simple harmonic Motion. **(CO3)**

OR

B) Define ideal gas and derive ideal gas equation**.** **(CO4)**

14. A) Two tuning forks A and B produce 4 beats per second. On loading B with wax 6 beats are produced. If the quantity of wax is reduced the number of beats drops to 4. If the frequency of A is 326 Hz, find the frequency of B**.(CO4)**

OR

B) Explain surface tension based on molecular theory. Write three examples of surface tension. **(CO5)**

15. A) Derive an expression for balancing condition of Wheat stone's bridge with a neat circuit diagram. **(CO5)**

OR

B) Explain principle and working of optical fibers. Write any three applications . **(CO5)**

PART C **1 x 10 = 10**

16) Derive relationship between molar specific heat of a gas at constant pressure C_p and molar specific heat of a gas at constant volume C_v and hence show that C_p is greater than C_v. **(CO4)**

Course code	Course Title	No. of Periods per week	Total No. of Periods	Marks for FA	Marks for SA
BM-104	Engineering Chemistry and Environmental Studies	4	120	20	80

S.No	Unit Title/Chapter	No of Periods	COs Mapped
1	Fundamentals of Chemistry	18	CO1
2	Solutions	10	CO1
3	Acids and bases	10	CO1
4	Principles of Metallurgy	8	CO1
5	Electrochemistry	16	CO2
6	Corrosion	8	CO2
7	Water Treatment	10	CO3
8	Polymers	12	CO4
9	Fuels	6	CO4
10	Chemistry in daily life	6	CO4
11	Environmental Studies	16	CO5
	Total	**120**	

- **Course Objectives**

Course Title: Engineering Chemistry & Environmental Studies	
Course Objectives	1. To familiarize with the concepts of chemistry involved in the process of various Engineering Industrial Applications. 2. To know the various natural and man-made environmental issues and concerns with an interdisciplinary approach that include physical, chemical, biological and socio cultural aspects of environment. 3. To reinforce theoretical concepts by conducting relevant experiments/exercises

- **Course outcomes**

Course Outcomes	CO1	Explain Bohr`s atomic model, chemical bonding, mole concept, acids and bases, P^H metallurgical process and alloys
	CO2	Explain electrolysis, Galvanic cell, emf and corrosion
	CO3	Explain the chemistry involved in the treatment of water by advanced method
	CO4	Synthesise of Plastics, rubber and applications of fuel chemical compounds used in our daily life.
	CO5	Explain the causes, effects and control methods of air and water pollution and measures to protect the environment

Course code BM-104	**Engg. Chemistry and Environmental studies No of Cos;5**				**No Of periods 120**
Pos	**Mapped with CO No**	**CO periods addressing PO in Col 1 NO**	**%**	**Level 1,2,3**	**remarks**
PO1	CO1,CO2,CO3, CO4,CO5	60	50%	3	>40% level 3 (highly addressed) 25% to 40% level2(moderately addressed 5% to 25% level1 (Low addressed < 5%(not addressed)
PO2	CO1,CO2	13	10.8%	1	
PO3	CO2,CO3	10	8.3%	1	
PO4	CO1	10	8.3%	1	
PO5	CO4,CO5	15	12.5	1	
PO6					
PO7	CO4	12	10%	1	

- COs-POs mapping strength (as per given table)

	PO1	PO2	PO3	PO4	PO5	PO6	PO7	PSO1	PSO2	PSO3
CO1	3	1		1				1	1	
CO2	3	1	2					1	1	
CO3	3		2							
CO4	3				1		2			
CO5	3				3			1		

3 = strongly mapped

2= moderately mapped

1= slightly mapped

Note: The gaps in CO and PO mapping will be achieved by one or more appropriate activities from the following:

i) Seminars ii) Tutorials iii) Guest Lectures iv) Assignments v) Quiz competitions vi) Industrial visit vii) Tech Fest viii) Mini project ix) Group discussions x) Virtual classes xi) Library visit for e-books

➢ **Model Blue Print with Weightage for Blooms category and questions for each chapter and COs mapped**

S.No	Unit Title/Chapter	No of Periods	Weightage of marks	Marks wise distribution of Weightage				Question wise distribution of Weightage				Mapped with CO
				R	U	Ap	An	R	U	Ap	An	
1	Fundamentals of Chemistry	18	19	8	8	3		1	1	1		CO1
2	Solutions	10	11	0	0	8	3			1	1	CO1
3	Acids and bases	10	11	0	8	0	3		1		1	CO1
4	Principles of Metallurgy	8	8	8	0	0		1				CO1
5	Electrochemistry	16	11	8	3	0		1	1		*	CO2
6	Corrosion	8	8	0	8	0			1			CO2
7	Water Treatment	10	11	8	3	0		1	1			CO3
8	Polymers	12	11	3	8	0		1	1		*	CO4
9	Fuels	6	3	3	0	0		1				CO4
10	Chemistry in daily life	6	3	0	0	3				1		CO4
11	Environmental Studies	16	14	3	11	0		1	2			CO5
Total		**120**	**110**	**12**	**6**	**6**	**6**	**20**	**35**	**5**	***10**	

***One question of HOTs for 10 marks from any of the unit title 5 or 8**

Upon completion of the course the student shall be able to learn out

ENGINEERINGCHEMISTRY AND ENVIRONMENTAL STUDIES

1.0 Atomic structure

1.1 Explain the charge, mass of fundamental particles of an atom (electron, proton and neutron) and the concept of atomic number and mass number.

1.2 State the Postulates of Bohr's atomic theory and its limitations.

1.3 Explain the significance of four Quantum numbers.

1.4 Explain 1. Aufbau principle, 2 Pauli's exclusion principle 3 Hund's rule.

1.5 Define Orbital of an atom and draw the shapes of s, p and d- Orbitals.

1.6 Write the electronic configuration of elements up to atomic number 30

1.7 Explain the significance of chemical bonding

1.8 Explain the Postulates of Electronic theory of valency

1.9 Define and explain Ionic and Covalent bonds with examples of NaCl , MgO, *H_2,*O_2 and *N_2.

(* Lewis dot method)

1.10 List out the Properties of Ionic compounds and covalent compounds and distinguish between their properties.

1.11 Structures of ionic solids-define a) Unit cell b) co-ordination number and the structures of NaCl and CsCl unit cells.

2.0 Solutions

2.1 Define the terms 1.Solution, 2.Solute and 3.Solvent

2.2 Classify solutions based on physical state and solubility

2.3 Define mole and problems on mole concept.

2.4 Define the terms 1. Atomic weight, 2.Molecular weight and 3. Equivalent weight and calculate Molecular weight and Equivalent weight of the given acids.(HCl,H_2SO_4,H_3PO_4)Bases (NaOH, $Ca(OH)_2$, $Al(OH)_3$) and Salts (NaCl, Na_2CO_3, $CaCO_3$)

2.5 Define molarity and normality and numerical problems on molarity and normality
a) Calculate the Molarity or Normality if weight of solute and volume of solution are given
b) Calculate the weight of solute if Molarity or normality with volume of solution are given
c) Problems on dilution to convert high concentrated solutions to low concentrated Solutions

3.0 Acids and bases

3.1 Explain Arrhenius theory of Acids and Bases and give the limitations of Arrhenius theory of Acids and Bases.

3.2 Explain Bronsted–Lowry theory of acids and bases and give the limitations of Bronsted–Lowry theory of acids and bases.

3.3 Explain Lewis theory of acids and bases and give the limitations of Lewis theory of acids and bases.

3.4 Explain the Ionic product of water

3.5 Define pH and explain P^H scale and solve the Numerical problems on pH(Strong Acids and Bases)

3.6 Define and explain buffer solution and give the examples of buffer solutions.

3.7 State the application of buffer solutions

4.0 Principles of Metallurgy

4.1 List out the Characteristics of Metals and non-metals

4.2 Distinguish between Metals and Non-metals

4.3 Define the terms 1.Mineral, 2.Ore, 3. Gangue, 4.Flux5.Slag

4.4 Describe the methods of concentration of Ore; 1.Handpicking, 2.Levigation and 3. Froth Floatation

4.5 Describe the methods involved in extraction of crude metal- Roasting, Calcination and Smelting.

4.6 Explain the purification of Copper by Electrolytic Refining

4.7 Define an Alloy and Write the composition and uses of the following alloys. 1. Brass 2. Germen silver 3. Nichrome.

5.0 Electrochemistry

5.1 Define the terms1. Conductor 2. Semiconductor 3.Insulator, 4.Electrolyte5.Non–electrolyte. Give two examples each.

5.2 Distinguish between metallic conduction and Electrolytic conduction

5.3 Explain electrolysis by taking example fused NaCl

5.4 Explain Faraday's laws of electrolysis

5.5 Define 1.Chemical equivalent (E) 2.Electrochemicalequivalent (e) and their relation.

5.6 Solve the Numerical problems on Faraday's laws of electrolysis and applications of electrolysis (Electro plating)

5.7 Define Galvanic cell and explain the construction and working of Galvanic cell.

5.8 Distinguish between electrolytic cell and galvanic cell

5.9 Explain the electrode potentials and standard electrode potentials

5.10 Explain the electrochemical series and its significance

5.11 Explain the emf of a cell and solve the numerical problems on emf of the cell based on standard electrode potentials.

6.0 Corrosion

6.1 Define the term corrosion.

6.2 state the Factors influencing the rate of corrosion

6.3 Describe the formation of a) composition cell b) stress cell c)concentration cell during corrosion.

6.4 Define rusting of iron and explain the mechanism of rusting of iron.

6.5 Explain the methods of prevention of corrosion

a)Protective coatings (anodic and cathodic coatings)

b) Cathodic protection (Sacrificial anode process and Impressed–voltage process)

7. 0 Water Treatment

7.1 Define soft water and hard water with respect to soap action.

7.2 Define and classify the hardness of water.

7.3 List out the salts that causing hardness of water (with Formulae)

7.4 State the disadvantages of using hard water in industries.

7.5 Define Degree of hardness and units of hardness (mg/L) or(ppm).

7.6 Explain the methods of softening of hard water: a) Ion-exchange process, b)Permutit process or zeolite process

7.7 State the essential qualities of drinking water.

7.8 Chemistry involved in treatment of water (Coagulation, Chlorination, deflouridation)

7.9 Explain Osmosis and Reverse Osmosis with examples.

7.10 State the applications of Reverse Osmosis.

8.0 Polymers

8.1 Explain the concept of polymerisation

8.2 Describe the methods of polymerization a)addition polymerization of ethylene b)condensation polymerization of Bakalite(Only flow chart)

8.3 Define thermoplastics and thermosetting plastics with examples.

8.4 Distinguish between thermo plastics and thermosetting plastics

8.5 List the Characteristics of plastics and state the disadvantages of using plastics.

8.6 State the advantages of plastics over traditional materials.

8.7 Explain the methods of preparation and uses of the following plastics:
1. PVC, 2.Teflon, 3. Polystyrene 4. Nylon 6,6

8.8 Explain processing of Natural rubber and write the structural formula of Natural rubber.

8.9 List the Characteristics of raw rubber

8.10 Define and explain Vulcanization and List out the Characteristics of Vulcanized rubber.

8.11 Define the term Elastomer and describe the preparation and uses of the following synthetic rubbers a) Buna-s and b)Neoprene rubber.

9.0 Fuels

9.1 Define the term fuel

9.2 Classify the fuels based on physical state and based on occurrence.

9.3 List the characteristics of good fuel.

9.4 State the composition and uses of gaseous fuels.
a)water gas b) producer gas, c) natural gas, d) Coal gas, e)Biogas.

10.0 Chemistry in daily life

10.1 Give the basic chemical composition, applications, health aspects and pollution impacts of
a) soaps, and detergents b) vinegar c) Insect repellents d) activated charcoal e) Soft drinks

11.0 ENVIRONMENTALSTUDIES

11.1 Define the term environment and explain the scope and importance of environmental studies

11.2 Define the segments of environment 1).Lithosphere, 2).Hydrosphere, 3).Atmosphere, 4).Biosphere,

11.3 Define the following terms 1)Pollutant, 2).Pollution, 3).Contaminant, 4)receptor, 5)sink, 6) particulates, 7)dissolved oxygen (DO), 8)Threshold limit value (TLV), 9).BOD,10).COD 11) eco system12) Producers13) Consumers 14) Decomposers with examples

11.4 State the renewable and non-renewable energy sources with examples.

11.5 Explain biodiversity and threats to biodiversity

11.6 Define air pollution and classify the air pollutants-based on origin and physical state of matter.

11.7 Explain the causes, effects of air pollution on human beings, plants and animals and control methods of air pollution.

11.8 State the uses of forest resources.

11.9 Explain causes and effects of deforestation

11.10 Explain the causes and effects of the following

1.) Greenhouse effect, 2) Ozone layer depletion and 3) Acid rain

11.11 Define Water pollution, explain the causes, effects and control methods of Water pollution.

COURSE CONTENT

ENGINEERING CHEMISTRY AND ENVIRONMENTAL STUDIES

1. Fundamentals of Chemistry

Atomic Structure: Introduction - Fundamental particles – Bohr's theory – Quantum numbers – Aufbau principle - Hund's rule - Pauli's exclusion Principle- Orbitals, shapes of s, p and d orbitals - Electronic configurations of elements

Chemical Bonding: Introduction – types of chemical bonds – Ionic and covalent bond with examples–Properties of Ionic and Covalent compounds- structures of ionic crystals (NaCl and CsCl).

2. Solutions

Introduction of concentration methods – mole concept, molarity and normality – Numerical problems on mole, molarity and normality.

3. Acids and Bases

Introduction – Theories of acids and bases and limitations – Arrhenius theory- Bronsted –Lowry theory – Lewis acid base theory – Ionic product of water- pH related numerical problems–Buffer solutions, action of buffer and its applications.

4. Principles of Metallurgy

Characteristics of Metals and non-metals –Distinguish between Metals and Non-metals, Define the terms i) Metallurgy ii) ore iii) Gangue iv) flux v) Slag - Concentration of Ore –Hand picking, Levigation, Froth floatation – Methods of Extraction of crude Metal – Roasting, Calcination, Smelting – Alloys – Composition and uses of brass, German silver and nichrome.

5. Electrochemistry

Conductors, semiconductors, insulators, electrolytes and non-electrolytes – electrolysis – Faraday's laws of electrolysis-application of electrolysis(electroplating) -numerical problems on Faraday's laws – Galvanic cell – standard electrode potential – electrochemical series–emf and numerical problems on emf of a cell .

6. Corrosion

Introduction - factors influencing corrosion - composition, stress and concentration cells– rusting of iron and its mechanism – prevention of corrosion by coating methods, cathodic protection methods.

7. Water technology

Introduction–soft and hard water–causes of hardness–types of hardness
–disadvantages of hard water – degree of hardness (ppm and mg/lit) – softening methods – permutit process – ion exchange process– qualities of drinking water –Chemistry involved in treatment of water (Coagulation, Chlorination, defluoridation) - Osmosis, Reverse Osmosis – Applications of Reverse osmosis.

8. Polymers

Introduction – polymerization – types of polymerization – addition, condensation with examples – plastics – types of plastics – advantages of plastics over traditional materials- Disadvantages of using plastics – Preparation and uses of the following plastics i).PVC ii) Teflon iii) Polystyrene iv) .Nylonn 6,6 –Processing of natural rubber - Vulcanization – Elastomers- Preparation and applications of Buna-s, Neoprene rubbers.

9. Fuels

Definition and classification of fuels–characteristics of good fuel-composition and uses of gaseous fuels.

10. Chemistry in daily life

Basic composition, applications, health aspects and pollution impacts of soaps and detergents, vinegar, insect repellents, soft drinks, activated charcoal.

11. ENVIRONMENTALSTUDIES

Introduction– environment –scope and importance of environmental studies – important terms related to environment– renewable and non-renewable energy sources–Concept of ecosystem – Biotic components –Forest resources – Deforestation -Biodiversity and its threats-Air pollution – causes-effects–Global environmental issues – control measures – Water pollution – causes – effects – control measures.

REFERENCEBOOKS

1. Telugu Academy Intermediate chemistry Vol 1&2
2. Jain & Jain Engineering Chemistry
3. O.P. Agarwal, Hi- Tech. Engineering Chemistry
4. Sharma Engineering Chemistry
5. A.K. De Engineering Chemistry

Table specifying the scope of syllabus to be covered for unit test 1, unit test 2 and unit test 3

Unit Test	**Learning outcomes to be covered**
Unit Test – 1	From 1.1 to 3.7
Unit Test – 2	From 4.1 to 7.10
Unit Test – 3	From 8.1 to 11.11

Model question paper for Unit Test with Cos mapped

UNIT TEST –I

Model Question Paper (C-20)

ENGINEERING CHEMISTRY & ENVIRONMENTAL STUDIES (BM-104)

TIME: 90 minutes Total Marks: 40

PART-A **16 Marks**

Instructions: (1) Answer all questions.

(2) First question carries 4 marks and each of rest carries 3 marks.

(3) Answers for Q.No. 2 to 5 should be brief and straight to the point and shall not exceed five simple sentences.

1. a. Number of neutrons in $_{11}Na^{23}$ is ---------- **(CO1)**
   b. The molarity and normality of HCl is the same (True or False) **(CO1)**
   c. What is the p^H range of base? **(CO1)**
   d. Graphite is a good conductor of electricity (Yes or No) **(CO1)**
2. Distinguish between orbit and orbital. **(CO1)**
3. Define Covalent bond. Explain the formation of covalent bond in Oxygen and Nitrogen molecules. **(CO1)**
4. Define mole. Calculate the number of moles present in 50 gm of $CaCO_3$ and 9.8 gm of H_2SO_4. **(CO1)**
5. Define P^H. Calculate the P^H of 0.001M HCl and 0.01M NaOH solution. **(CO1)**

PART – B **3x8M = 24M**

Answer either (A) or (B) from each questions from Part-B.

Each question carries 8 marks.

6. A) Explain Postulations of Bhor's atomic theory. Give its limitations. **(CO1)**

   (OR)

   B) Explain the significance of Quantum numbers. **(CO1)**
7. A) Express molarity normality with mathematical equation. Calculate the molarity and normality of 10gm of NaOH present in 500 ml solution. **(CO1)**

   (OR)

   B) Classify solutions based the physical state of solute and solvent and give an example each. **(CO1)**
8. A) What is buffer solution? Classify with examples and give it`s applications. **(CO1)**

   (OR)

   B) Explain Bronsted-Lowry theory of acids and bases. Give its limitations. **(CO1)**

UNIT TEST –II

Model Question Paper (C-20)

ENGINEERING CHEMISTRY & ENVIRONMENTAL STUDIES (BM-104)

TIME: 90 minutes Total Marks:40Marks

PART-A

16 Marks

Instructions: (1) Answer all questions.

(2) First question carries 4 marks and each of rest carries 3 marks.

(3) Answers for Q.No. 2 to 5 should be brief and straight to the point and shall not exceed five simple sentences.

1. a) Bauxite is the ore of ..... metal **(CO2)**
   b) What is the unit of electrochemical equivalent? **(CO2)**
   c) $CaSO_4$ is the permanent hardness causing salt. (True or False) **(CO3)**
   d) Write the Chemical formula of rust. **(CO2)**
2. Write any three differences between metallic conduction and electrolytic conduction**.** **(CO2)**
3. Write the composition and applications of German silver and Nichrome. **(CO1)**
4. Mention any three disadvantages of using hard water in industries. **(CO3)**
5. Define electro chemical equivalent and chemical equivalent. Give the relation between them. **(CO2)**

PART – B **3x8M = 24M**

Answer either (A) or (B) from each questions from Part-B.

Each question carries 8 marks.

6. A) What is galvanic cell? Explain construction and working of galvanic cell with neat diagram **(CO2)**

   (OR)

   B) State and explain Faraday`s laws of electrolysis. **(CO2)**
7. A) Explain different types of galvanic cells formed during the corrosion of metals. **(CO2)**

   (OR)

   B) What is hard water? Explain zeolite process of softening of hard water. **(CO3)**
8. A) Explain Froth floatation process. **(CO1)**

   (OR)

   B) Explain Electrolytic refining processing of copper. **(CO1)**

UNIT TEST –III

Model Question Paper (C-20)

ENGINEERING CHEMISTRY & ENVIRONMENTAL STUDIES (BM-104)

TIME: 90 minutes Total Marks:40

PART-A **16 Marks**

Instructions: (1) Answer all questions.

(2) First question carries 4 marks and each of rest carries 3 marks.

(3) Answers for Q. No. 2 to 5 should be brief and straight to the point and shall not exceed five simple sentences.

1. a) The monomer of PVC..... **(CO4)**
   b) Sulphur is the vulcanising agent. (True/False) **(CO4)**
   c) Give an example for secondary pollutant. **(CO5)**
   d) Presence of ozone in stratosphere is a pollutant.(Yes/No) **(CO5)**
2. List any three characteristic properties of vulcanised rubber. **(CO4)**
3. Define primary fuel and secondary fuels give an example each. **(CO4)**
4. Mention the basic chemical composition and applications of vinegar. **(CO4)**
5. Write any three threats to the biodiversity. **(CO5)**

PART – B **3x8M = 24M**

Answer either (A) or (B) from each questions from Part-B.

Each question carries 8 marks.

6. A) A) Explain addition and condensation polymerisation with an example each. **(CO4)**

   (OR)

   B) Give a method of preparation and applications of the following
   i) Buna-S ii) Neoprene **(CO4)**
7. A) What is air pollution? Explain any three causes of air pollution. **(CO5)**

   (OR)

   B) Briefly explain ozone layer depletion and green house effect. **(CO5)**
8. A) What is water pollution? Explain any three controlling methods of water pollution. **(CO5)**

   (OR)

   B) What are thermoplastics and thermo setting plastic? Write any four differences between these two plastics. **(CO4)**

Model Question Paper (C-20)

ENGINEERING CHEMISTRY & ENVIRONMENTAL STUDIES (104)

TIME: 3hrs **Total Marks:80**

PART-A

Instructions: (1) Answer all questions.

(2) Each question carries 3 marks.

Answer all questions. Each question carries three marks. **3x10=30M**

1. Draw the shapes of s and p orbitals. **(CO1)**
2. Define mole. Find the mole number of 10 g of $CaCO_3$ **(CO1)**
3. Define Buffer solution. Give any two examples. **(CO1)**
4. Define chemical equivalent and electrochemical equivalent. Give their relation. **(CO2)**
5. State name of the salts and their formulae that cause hardness. **(CO3)**
6. Write any three disadvantages of using plastics. **(CO4)**
7. Classify the fuels based on their occurrence. **(CO4)**
8. Mention the basic chemical composition and applications of vinegar. **(CO4)**
9. List out any three threats to biodiversity. **(CO5)**
10. Define pollutant and contaminant. Give an example each. **(CO5)**

PART – B

Each question carries eight marks. **8x5=40M**

11. A) Explain Bhor's atomic theory and give its limitations. **(CO1)**

(OR)

B) Explain ionic bond formation and covalent bond formation with one example each. **(CO1)**

12. A) Calculate the molarity and normality of 250 ml of sodium carbonate solution that contains 10.6 gm of sodium carbonate. **(CO1)**

(OR)

B) Explain Bronstead and Lowry theory of acids and bases. Give its limitations. **(CO1)**

13. A) Explain froth floatation and electrolytic refining of copper with neat diagrams. **(CO1)**

(OR)

B) Explain the construction and working of galvanic cell. **(CO2)**

14. A) Explain Cathode protection methods. **(CO2)**

(OR)

B) Explain ion-exchange of softening of hard water with a neat diagram. **(CO3)**

15. A) Explain addition and condensation polymerisation with an example each. **(CO4)**

(OR)

B) Explain the causes and effects of air pollution. **(CO5)**

PART –C

Question carries ten marks **10x1 =10M**

16. Analyse the products formed at cathode and anode with electrode reactions during the Electrolysis of aqueous NaCl in compare with fused NaCl. **(CO2)**

BASIC ELECTRICAL ENGINEERING

Course Code	Course title	No of periods/week	Total no of periods	Marks for FA	Marks for SA
BM-105	Basic Electrical Engineering	04	120	20	80

S No	Unit Title	No. of Periods	COs Mapped
1	Basic principles of electricity	15	CO1
2	D.C. Networks	15	CO2
3	Magnetism and Electromagnetism	20	CO3
4	Electromagnetic Induction	18	CO4
5	Electrostatics	18	CO5
6	Heating effects of Electric current	12	CO6
7	A.C Fundamentals	22	CO7
	TOTAL	**120**	

Course Objectives	1. To familiarize the concepts of basic principles of electricity
	2. To comprehend concepts of basic electrical circuits and analyse it.
	3.To familiarize concepts of magnetism, electromagnetism and electromagnetic induction.
	4. To explore electrostatics and heating effects
	5. To familiarize the AC fundamentals

CO No		Course Outcome
CO1	**BM-105.1**	Explain the basic principles of electricity
CO2	**BM-105.2**	Analyze the basic electrical circuits
CO3	**BM-105.3**	Explain the concept of magnetism, electromagnetism and electromagnetic induction
CO4	**BM-105.4**	Explain the concept of electrostatics and heating effects
CO5	**BM-105.5**	Explain the AC fundamentals in Electronic circuits

Learning Outcomes

Up on the completion of the course student shall be able to:

Comprehend the Basic principles of electricity

1.1 Explain structure of Atom, electronic configuration of elements.
1.2 Define Valence electron; distinguish between Conductors, Insulators and Semiconductors with reference to valence electrons.
1.3 Explain the concept of electric Charge, state SI unit for charge.
1.4 Explain the concept of Potential, Potential Difference and E.M.F, Mention their S.I. Units.
1.5 Explain the concept of electric Current and differentiate between conventional electric current and electron current.
1.6 State and explain Ohm's law.
1.7 Explain the concept of electrical Resistance and Conductance and mention their S.I. Units
1.8 State parameters affecting the resistance
1.9 Define Specific resistance and state its S.I. Unit.
1.10 Explain Temperature Coefficient of resistance and write the expression between Temperature Coefficient and resistance.
1.11 Explain the concepts of Work done, Energy expended and Power dissipated in electric circuit and state S.I. Units of Work, Power and Energy
1.12 Solve simple Domestic electricity bill.
1.13 Derive the formula for equivalent resistance when resistances are connected in series, parallel and series-parallel.
1.14 Solve problems on series, parallel and series-parallel circuits for total current, branch current, power, and potential difference across a circuit component.

Comprehend the D.C. Networks

2.1 Explain the concept of electrical Network.
2.2 Define the terms
(i) Electric circuit, (ii) Branch, (iii) Node, (iv)Loop, (v) Active element and (vi) Passive element.
2.3 State and explain Kirchhoff's laws.
2.4 Solve problems on D.C. Networks using Kirchhoff's laws.
2.5 Explain Star and Delta configurations of resistances.
2.6 Mention transformation formulae from Star to Delta & Delta to Star (no derivation).
2.7 Solve simple problems on Star/Delta and Delta/Star transformation.

Explain the Concept of Magnetism and Electromagnetism

3.1 Explain the magnetism and magnetic Fields and draw field pattern of Bar magnet.
3.2 State Coulomb's laws of magnetism.
3.3 Define the terms Absolute and Relative Permeability of medium.
3.4 Explain the concept of Lines of force & Magnetic Field.
3.5 Define Field Intensity, Magnetic potential, Flux, Flux density.
3.6 Explain the concept of Electromagnetic effect
3.7 Draw and explain the field patterns due to straight current carrying conductor.
3.8 State Laplace law (Biot-Savart's Law) and develop the expression for magnitude of the force on a current carrying conductor placed inside a magnetic field.
3.9 State the Fleming's Left Hand rule and mention the expression for the force between two parallel current carrying conductors
3.10 Develop the concept of Magnetic circuits
3.11 Define Magneto Motive Force (mmf), Permeability, Flux ,Reluctance and Solve problems on simple magnetic circuits
3.12 Compare Magnetic circuit with Electric circuit
3.13 Explain the terms Leakage Flux and Leakage Co-efficient
3.14 Draw the general shape of magnetization curve for magnetic material and explain Hysteresis loop, Hysteresis loss.
3.15 Explain Eddy current loss.

Explain the Concept of Electromagnetic Induction:

4.1 Define and explain Faraday's laws of Electromagnetic Induction,
4.2 List the types of induced EMFs and differentiate them.
4.3 Define Lenz's law.
4.4 Derive the expression for Dynamically induced E.M.F. and solve related problems.
4.5 Explain the terms Self-inductance and Mutual inductance and differentiate them.
4.6 Derive expressions for Self and Mutual inductance in terms of physical parameters.
4.7 Define the Co-efficient of coupling.
4.8 Find the Equivalent inductance when self-inductances are connected in series and parallel.
4.9 Derive the formula for energy stored in a magnetic field.

Appreciate the concept of Electrostatics:

5.1 State Coulomb's Laws of Electrostatics and Solve problems on Inverse Square Laws as applied to electrostatics.
5.2 Define Absolute Permittivity and Relative Permittivity of a medium.
5.3 Explain Electrostatic Induction.
5.4 Comprehend Electrostatic Field and electrostatic Lines of force and list the properties of Electrostatic lines of force.

5.5 Define Field strength in terms of force per unit charge, electric Flux, Flux density.
5.6 State Gauss's Theorem (proof is not required).
5.7 Explain the charge residing outside the surface of a sphere.
5.8 Solve problems on field strength (or field intensity or electric intensity) and flux density.
5.9 Define electric Potential, Potential Difference in electric fields and obtain an expression for potential due to point charge.
5.10 Explain the Di-electric strength and state the importance of Di-electric constant.
5.11 Define Capacitance and give its S.I. Unit.
5.12 Obtain the expressions for capacitance of a parallel plate capacitor with Uniform Di-electric medium.
5.13 Derive Equivalent capacitance of series, parallel and series-parallel combinations of capacitors.
5.14 Calculate the Energy stored in a capacitor and solve the problems on calculation of Equivalent capacitance and Energy stored in a capacitor.

Appreciate the Heating effects of Electric current

6.1 Explain Heating effects of electric current.
6.2 State and explain Joule's law.
6.3 Define latent heat and specific heat
6.4 Explain the working of electrical appliances like
i. Incandescent bulb
ii. Electric kettle
iii. Electric Iron
iv. Geyser

Comprehend the A.C Fundamentals:

7.1 Define the terms pertaining to alternating quantities (i) Wave form, (ii) Cycle, (iii)Time period, (iv) Frequency, (v) Amplitude.
7.2 State the Instantaneous value, Maximum value, Frequency and Time.
7.3 State and calculate the Average value, R.M.S. value, Form factor and Peak factor for sine wave.
7.4 Explain the terms Phase and Phase difference.
7.5 Use 'J' Operator to perform Phasor algebra (addition, subtraction, multiplication and division)
7.6 Convert Polar quantities to Rectangular quantities and vice versa.
7.7 Explain the concepts of single phase A.C. Circuits.
7.8 Derive relationship between voltage and current, power consumed in pure Resistive, Inductive and Capacitive circuits with vector diagrams.
7.9 Derive relationship between voltage and current, power consumed and power factor in R - L, R-C and R - L-C series circuits.
7.10 Simple problems on R-L, R-C and R-L-C series circuits.

CO-PO/PSO MATRIX

CO No	PO1	PO2	PO3	PO4	PO5	PO6	PO7	PSO1	PSO2	PSO3
BM-105.1	3							2		
BM-105.2	3	1	2					2		
BM-105.3	3							2		
BM-105.4	3	1	2	1				2		
BM-105.5	3	1	2					2		
Average	**3**	**1**	**2**	**1**				**2**		

3=Strongly mapped 2=Moderately mapped 1=Slightly mapped

HYPONATEDCOURSE CONTENTS

1. Basic principles of electricity:
Atomic Structure, Differences between Conductors, Insulators and Semiconductors, Concept of Electric Charge, Concept of Potential, Concept of Electric Current.Ohms law, Concept of Electrical resistance, parameters affecting resistance, Specific resistance, Temperature Co-efficient, Work Power and Energy, Series, parallel and Series-Parallel circuits.

2. **D.C. Networks:**
Network terminology-Network solutions by Kirchhoff's laws, Star/Delta transformation-Problems.

3. Magnetism and Electromagnetism:
Electromagnetic Effect, Magnetic fields, Field patterns, Permeability, Flux, Flux density, comparison between Electrostatic and Magnetic lines of force and Eddy current losses.Biot-savarts' law, Fleming's Left Hand rule, MMF, Reluctance, Hysteresis loss.

4. Electromagnetic Induction:
Faraday's laws, Lenz's Law, Dynamically induced EMF, Statically induced EMF, Self and Mutual Inductance, Co-efficient of coupling, Series connection of inductances, Energy stored in magnetic field.

5. Electrostatics:
Laws of Electrostatics, Relative and AbsolutePermittivity, Electric Fields, Potential and Potential Difference, Gauss's theorem, Flux, Flux density, Electric Intensity, Di-electric strength, concept of Capacitance, Capacitances in series, parallel and series- parallel combination, Energy stored in a capacitor.

6. Heating effects of Electric current:
Define Mechanical equivalent of heat. Define Joule's Law, Latent heat, Specific heat, working of different electrical appliances

7. A.C Fundamentals:
RMS value, Average value and terms associated with Sine wave, j-notation, Polar to Rectangular conversions and vice versa, RL, RC, RLC series circuits

REFERENCES:

1. V K Mehata, Rohit Mehata, Basic electrical engineering-S.Chand & Co.
2. D P Kothari, I J Nagrath, Basic electrical engineering, 4th edition- TMH
3. B.L. Thereja, A Text Book of Electrical Technology, volume-II,S.Chand &Co.
4. Dr.P S Bimbhra, Electrical Machines, Khanna Publication.
5. J.B. Gupta,Basic Electrical Engineering , 2013 edition,S.K.Khataria and sons.
6. H. Cotton,Electrical Technology, 7th Edition,CBS

BLUE PRINT:

Sl. No.	Chapter/ Unit Title	No of Periods	Weightage Allotted	Marks Wise distribution of weightage				Question Wise distribution of weightage				COs mapped
				R	U	Ap	An	R	U	Ap	An	
1	Basic principles of electricity	15	10	3	3	-	8	1	1	-	1	CO1
2	D.C. Networks	15	7		3	-			1	-		CO2
3	Magnetism and Electromagnetism	20	14	3	3	8	-	1	1	1		CO3
4	Electromagnetic Induction	18	11		3	8	-		1	1	-	CO4
5	Electrostatics	18	11	3	-	8	-	1		1	-	CO5
6	Heating effects of Electric current	12	6	3		3		1		1		CO6
7	A.C Fundamentals	22	11		3	8			1	1		CO7
HOTs question from chapters 4/5/7			10				10				1	
Total	**120**		**80**	**12**	**15**	**35**	**18**	**4**	**5**	**5**	**2**	

Table specifying the scope of syllabus to becovered for Unit test-I, Unit Test-II and Unit Test-III

Unit Test	Learning outcomes to be covered
Unit Test-I	From 1.1 to 3.9
Unit Test-II	From 3.10 to 5.14
Unit Test-III	From 6.1 to 7.10

DBME UNIT TEST-I

MODEL QUESTION PAPER (C-20)

BASIC ELECTRICAL ENGINEERING (BM-105)

Time: 90 Minutes Total Marks: 40

PART-A **16 Marks**

***Instructions*: (1) Answer all questions.**

(2) First question carries four marks and each of rest carries three marks.

(3) Answer for Q.No.2 to 5 should be brief and straight to the point and shall not exceed *five* simple sentences.

1.	a. Ohm's law can be applied to non- linear circuit (State True/False). b. S.I units of work ……. c. Relative permeability of Air…….. d. Name any two active elements.	U	4M	CO1, CO2, CO3
2.	Define Valance electron and differentiate conductors, semi-conductors and insulators based on valance electrons.	R	3M	CO1
3	Define specific resistance and state its S.I unit.	R	3M	CO1
4	State Kirchhoff's laws.	R	3M	CO2
5	State Coulomb's law of magnetism.	R	3M	CO3

PART-B **3 x 8 = 24 marks**

Answer either (A) or (B) from each questions from part-B

Each question carries eight marks

6	Derive the formula for equivalent resistance, when three resistances are connected in series, parallel and series-parallel. OR Explain the concept of electrical resistance and state the parameters affecting resistance	U	8M	CO1
7.	Convert to star configuration when R_1=8Ω, R_2=12 Ω and R_3= 15 Ωare connected in delta configuration. **OR** Define the terms i) Electric circuit ii) Node iii) Branch iv) Loop	An	8M	CO2
8.	Explain Hysteresis loop and Hysteresis loss. **OR** Compare Magnetic circuit and Electrical circuit.	U	8M	CO3

BOARD DIPLOMA EXAMINATION, (C-20)
DBME- FIRST YEAR EXAMINATION
BASIC ELECTRICAL ENGINEERING (BM-105)

Time: 3Hours Total Marks: 80

PART- A **10×3M=30M**

Instructions: (1) Answer all questions
(2) Each question carries three marks
(3) Answers should be brief and straight to the point and shall not exceed five simple sentences.

1.	Define Valance electron and differentiate conductors, semi-conductors and insulators based on valance electrons.	R	3M	CO1
2.	Define specific resistance and state its S.I unit	R	3M	CO7
3	State Kirchhoff's laws.	R	3M	CO1
4	State Coulomb's law of magnetism.	R	3M	CO2
5	Define the terms a) Absolute permeability b) Relative permeability.	R	3M	CO3
6	Define Co-efficient of coupling.	R	3M	CO3
7	State Gauss's theorem.	R	3M	CO4
8	Draw the diagram for electric iron.	R	3M	CO6
9	State Joule's law.	R	3M	CO5
10	Define the terms a) Waveform b) cycle c) Time period.	U	3M	CO5

PART-B **5 x 8 = 40 marks**

Answer either (A) or (B) from each questions from part-B

Each question carries eight marks

11	Derive the formula for equivalent resistance, when three resistances are connected in series, parallel and series-parallel.			
	Or	U	8M	CO1
	Explain the concept of electrical resistance and state the parameters affecting resistance.			
12	Explain Hysteresis loop and Hysteresis loss.			
	Or	U	8M	CO3
	Compare Magnetic circuit and Electrical circuit.			
13	Define and derive the expressions for self and mutual inductances**.**			
	Or	U	8M	CO4
	Compare Statically and Dynamically induced emf's.			
14	Derive the expression for parallel plate capacitor with uniform dielectric.			
	Or	An	8M	CO6
	Derive the expression for energy stored in capacitor.			
15	Derive the relationship between Voltage and Current, Power consumed and Power factor in R-L, R-C, L-C and R-L-C series circuits.			
	Or			
	A resistance of 20 ohms connected in series with a pure inductance of 0.2 mH. A supply of 230 V,50 Hz single phase AC is given to the circuit. Calculate i) Impedance, ii) Power factor, iii)Phase angle and iv) Current flowing through the circuit.	An	8M	CO7

PART- C 1×10M=10M

Instructions: (1) Answer the following question

(2) Each question carries ten marks.

(3) Answers should be comprehensive and the criterion for valuation is the content but not the length of the answer.

16	Derive an expression for equivalent inductance when three inductors are connected in series and parallel.	An	10M	CO4

ELECTRONIC COMPONENTS & DEVICES

Course Code	Course title	No of periods/week	Total no of periods	Marks for FA	Marks for SA
BM-106	ELECTRONIC COMPONENTS & DEVICES	04	120	20	80

S No	Unit Title	No. of Periods	COs Mapped
1	Passive Components	15	CO1
2	Switches, Relays, Batteries and PCB'S	10	CO2
3	Semiconductor Physics	12	CO3
4	Semiconductor Diodes	15	CO4
5	Rectifiers	15	CO5
6	Transistor and its Characteristics	18	CO6
7	Transistor Biasing Circuits	20	CO7
8	Field Effect Transistors	15	CO8
	Total	**120**	

Course Objectives	1. To familiarize different passive components, switches, relays, PCB's and their uses
	2. To explore on the formation of extrinsic semiconductors, semiconductor diode, and Zener diode.
	3. To describe the working of rectifier circuits and filters
	4. To analyse the working of BJT,BJT configurations and transistor biasing methods
	5. To understand the working of Field Effect Transistors

CO No		Course Outcome
CO1	**BM-106.1**	Explain the different passive components, switches, relays, PCB's and batteries and their uses
CO2	**BM-106.2**	Explain the working of Extrinsic semiconductors, semiconductor diode, and Zener diode
CO3	**BM-106.3**	Explain the working of rectifier circuits and filters
CO4	**BM-106.4**	Analyse the working of BJT and its configurations and transistor biasing methods
CO5	**BM-106.5**	Explain the working of Field Effect Transistors

OBJECTIVES:
On completion of the study of the subject a student should be able to comprehend the following:

1.0 Know different types of Electronic Passive Components.
1.1 Classify &Define different types of materials. Give examples for Conductors, Semiconductors and Insulators.
1.2 Define Active and Passive elements
1.3 Define Resistance and Resistivity of a material
1.4 Classify the Resistors: fixed, variable, carbon, metal film and wire wound resistors.
1.5 List the ratings of a Resistor.
1.6 Explain Resistor colour coding for Carbon and Metal Film Resistors.
1.7 Explain the features of above Resistors with respect to Size, Power Rating and Tolerance.
1.8 List the applications of the above Resistors.
1.9 Mention special purpose Resistors LDR, VDR, Thermistors and Sensistor.
1.10 Explain the construction and working principle of LDR with output characteristics.
1.11 List the applications of LDR like Twilight switch, optical counter.
1.12 Draw and explain characteristics of VDR.
1.13 Define capacitor, capacitance and dielectric constant and dielectric strength of a capacitor.
1.14 Explain charging and discharging of a capacitor.
1.15 List the factors affecting Capacitance and Voltage rating.
1.16 Classify the Capacitors and list their applications and ranges.
1.17 Mention the losses in a capacitor.
1.18 Define Inductor and Self Inductance, Mutual Inductance and Transformer.
1.19 Explain the principle of a Transformer.
1.20 Classify the Transformers (based on applications, frequency, core used) and List their applications.

2.0 Familiarize different types of switches, relays, batteries and PCB's

2.1 Explain the working of a switch.

2.2 Classify Switches according to poles and throws: SPST, SPDT, DPST, DPDT and multi pole, multi throw.

2.3 Explain the working of toggle, push button, rotary, slide, keyboard and thumbwheel switches.

2.4 Define relay and classify them.

2.5 Explain the construction and working of Electromagnetic Relay.

2.6 Define storage Batteries.

2.7 Classification of cells and Differences between Primary and Secondary Cell

2.8 Explain the differences between Conventional circuits and Printed Circuit Boards.

2.9 Classify the PCB's.

2.10 List various types of laminates used in PCB's.

2.11 Mention the methods of layout preparation of PCB's.

2.12 List the steps involved in PCB manufacturing processes.

2.13 State the advantages of PCBs.

3.0 Understand Semiconductor Physics.

3.1. Explain the atomic structure of Germanium and Silicon semi-conductor Materials.

3.2. Explain energy levels and energy bands in solids.

3.3. Explain the difference between Conductor, Semi-Conductor and Insulator on the basis of Energy band structure.

3.4. List the properties of Semi-Conductors and effect of Temperature on Semi-Conductors.

3.5. Define Doping.

3.6. Differentiate between Intrinsic and Extrinsic Semi-Conductors.

3.7. Describe the formation of N-type and P-type materials.

3.8. Explain hole Current due to majority carriers and minority carriers.

3.9. Explain drift current and diffusion current.

3.10. Compare drift and diffusion currents.

4.0 Understand the properties of PN Diode and Zener Diode.

4.1 Explain the formation of P-N junction and its properties.

4.2 Explain the concept of potential barrier.

4.3 Describe the operation of P-N Junction diode with forward bias and reverse bias.

4.4 Draw the Symbol of a P-N Junction diode and list its specifications.

4.5 Draw the V-I characteristics of a P-N Junction diode and explain each region.

4.6 Explain how to calculate the forward/ reverse resistance of the Diode from the characteristic curve.

4.7 State the effect of temperature on the Forward and Reverse Characteristics of a P-N junction diode.

4.8 Draw the Symbol of Zener diode and also list its applications.

4.9 Draw the V-I characteristics of Zener diode and explain.

4.10 Distinguish between Zener breakdown and Avalanche breakdown.

5.0 Describe the working principle of Rectifiers.

5.1 Differentiate between DC power supply and Battery.

5.2 Define Rectifier. Classify the Rectifiers.

5.3 Explain the working of HWR.

5.4 Derive expressions for V_{dc}, I_{dc}, V_{rms}, I_{rms}, efficiency, ripple factor and regulation.

5.5 Define the PIV rating of the Rectifier diode and state its importance.

5.6 Explain the working of FWR using center tapped transformer.

5.7 Derive the expression for V_{dc}, I_{dc}, V_{rms}, I_{rms}, efficiency and ripple factor for centre tapped FWR.

5.8 Explain the working of FW Bridge rectifier.

5.9 Explain the regulation characteristics of FWR.

5.10 Identify the reasons for poor regulation in rectifier circuits.

5.11 Compare the performance parameters of HWR & FWR.

5.12 Explain the need for a filter circuit in rectifiers.

5.13 Explain C, LC & CLC type filter circuits

5.14 Explain simple Zener Voltage Regulator.

5.15 Draw the block diagram and explain the working of regulated power supply.

6.0 Understand Basics of a Transistor and its characteristics

6.1 Name the terminals of the transistor

6.2 Explain the purpose of emitter, base and collector

6.3 Draw the Symbols of NPN and PNP transistors.

6.4 Explain construction and working of NPN and PNP transistor.

6.5 List the specifications of Transistor

6.4 Mention three basic different packaging and encapsulation used for Transistor

6.5 List the configurations of a transistor.

6.6 Identify the Circuits for CB, CE and CC configurations.

6.7 Define Alpha, Beta factors of a transistor and explain their significance

6.8 Derive the relation between Alpha and Beta

6.9 Explain the input and output characteristics of transistors in CB, CE and CC mode.

6.10 Derive the expressions for the collector current in CB and CE configurations in terms of I_c, I_e and I_{cbo} and I_{ceo}.

6.11 Compare the characteristics of CB, CE and CC.

7.0 Understand function of Transistor biasing circuits.

7.1 Explain Transistor as an Amplifier

7.2 Explain load line analysis. a) dc load line, b) ac load line

7.3 Explain the concept of stability of operating point

7.4 Explain the need for transistor biasing.

7.5 List out the different biasing techniques

7.6 Draw the transistor amplifier circuits with fixed bias, collector to base bias, potential divider bias and self bias
7.7 Explain how biasing is provided in the above circuits.
7.8 Define stability factor
7.9 Explain the compensating methods of bias stability.

8.0 Understand Field Effect Transistors

8.1 Draw the symbol of FET and name the terminals.
8.2 Explain the construction of JFET.
8.3 Explain the working of a JFET.
8.4 Draw the drain characteristics for JFET.
8.5 State the merits and demerits of a FET over BJT.
8.6 Define 'g_m' factor of a FET.
8.7 List the applications of FET.
8.8 Explain the working of a MOSFET (Enhancement mode and Depletion mode)

CO-PO/PSO MATRIX

CO No	PO1	PO2	PO3	PO4	PO5	PO6	PO7	PSO1	PSO2	PSO3
BM-106.1	3							2		
BM-106.2	3		2					2		
BM-106.3	3							2		
BM-106.4	3							2		
BM-106.5	3	1	2					2		
Average	**3**	**1**	**2**					**2**		

3=Strongly mapped 2=Moderately mapped 1=Slightly mapped

HYPONATED COURSE CONTENTS

1 Electronic passive Components.

Conductors, Semiconductors, Insulators and dielectric materials. Resistance and Resistivity, ratings of a Resistor, Classification of the Resistors.NTC, PTC, LDR and VDR characteristics, color-coding of Resistors, Capacitor and Capacitance, charging and discharging of a capacitor. Factors affecting capacitance and voltage rating. Classification of capacitors-applications of various Capacitors, Inductors and Transformers- Self Inductance, mutual Inductance. Application of various transformers.

2 Switches, relays, batteries and PCB's

Switches and their applications. SPST, SPDT, DPST, DPDT and multi pole-multi throw Switches, Electromagnetic Relays, Storage Batteries ,Cell classification, Difference between Primary and Secondary Cells, Conventional circuits and Printed Circuit Boards-advantages of PCB's. Steps involved in PCB manufacturing processes.

3 Semiconductor Physics.

Atomic structure of semiconductor materials. Energy levels and energy bands in solids. Effect of Temperature on Semiconductors, Doping, Intrinsic and Extrinsic Semiconductors. Formation of N-type and P-type semi conducting materials. Drift and Diffusion currents.

4 Semiconductor Diodes.

Formation of P- N junction and its properties. Concept of potential barrier, operation of P - N Junction diode with Forward bias and Reverse bias. Effect of temperature on the Forward and Reverse Characteristics of P – N junction diode. Zener diode V-I characteristics and its applications. Zener breakdown and Avalanche breakdown.

5 Rectifiers and Power supplies

Semiconductor diode as a rectifier, Half wave, Full wave and Bridge rectifiers. Definitions of PIV, ripple factor, regulation and rectification efficiency. Type of filter circuits, Regulated power supply, Zener diode voltage regulator.

6 Transistor characteristics.

Constructional details, operation, specifications and applications of Transistors, I/P and O/P characteristics of transistors in CB, CE and CC configurations. Expressions for the collector current. Alpha, Beta factors of a transistor, Compare CB,CE, and CC Configurations.

7 Transistor biasing circuits.

Transistor as an Amplifier, Load line analysis, Concept of operating point stability, Need for transistor biasing. Amplifier circuits with fixed bias, collector to base bias, potential divider bias. Stability factor compensating methods.

8 Field Effect Transistors

Working of JFET and MOSFET (Enhancement mode and Depletion mode) with transfer characteristics.

REFERENCE BOOKS

1. G.K.Mithal, Electronic Devices and Circuits, 23rd Edition- Khanna Publication-1988
2. B. Somanathan, Electronic devices and applications, 2nd Edition- PHI.
3. Dr.K.Padmanabham, P.Swaminathan, Electronic components, 2nd Edition,-Laxmi Publications (P) Ltd
4. Walter c bosshard, Printed circuit boards: design and technology -TMH
5. Bernard Grob, Basic Electronics, 4th edition- 1977-TMH
6. Millman&Halkias, Electronic devices & Circuits, 4th edition- TMH
7. N.N. Bhargava, D.C. Kulshreshtha, S.C. Gupta,; 2nd edition (1 July 2017), McGraw Hill Education

BLUE PRINT:

Sl. No.	Unit Title	No. of Periods	Weightage Allotted	Marks Wise distribution of weightage				Question Wise distribution of weightage				COs mapped
				R	U	Ap	An	R	U	Ap	An	
1	Passive Components	15	11	3	-	8	-	1		1	-	CO1
2	Switches, Relays, Batteries and PCB'S	10	6	3	3	-	-	1	1		-	CO2
3	Semiconductor Physics	12	6	3	3		-	1	1		-	CO3
4	Semiconductor Diodes	15	11		3	8			1	1		CO4
5	Rectifiers	15	11		3	8	-		1	1		CO5
6	Transistor and its Characteristics	18	8			8	-	-		1		CO6
7	Transistor Biasing Circuits	20	6	3	3			1	1			CO7
8	Field Effect Transistors	15	11		3	8		-	1	1		CO8
	HOTs question from chapter 5/6/7/8		10				10				1	
	Total	**120**	**80**	**12**	**18**	**40**	**10**	**4**	**6**	**5**	**1**	

Table specifying the scope of syllabus to be covered for Unit test-I, Unit Test-II and Unit Test-III

Unit Test	Learning outcomes to be covered
Unit Test-I	From 1.1 to 3.10
Unit Test-II	From 4.1 to 6.4
Unit Test-III	From 6.5 to 8.8

DBME UNIT TEST-I

MODEL QUESTION PAPER (C-20)

ELECTRONIC COMPONENTS AND DEVICES (BM-106)

Time: 90 Minutes Total Marks: 40

PART-A **16 Marks**

Instructions: (1) Answer all questions.

(2) First question carries four marks and each of rest carries three marks.

(3) Answer for Q.No.2 to 5 should be brief and straight to the point and shall not exceed five simple sentences.

1.	a. List any two ratings of a resistor. b. Expand SPDT …… c. List any two advantages of PCB's. d. Energy band gap for semiconductors……..	R	4M	CO1, CO2, CO3
2.	Define Self Inductance.	R	3M	CO1
3	List any three differences between primary cell and secondary cell.	U	3M	CO2
4	Define Relay.	R	3M	CO2
5	Define the term doping.	R	3M	CO3

PART-B **3 x 8 = 24 marks**

Answer either (A) or (B) from each questions from part-B

Each question carries eight marks

6	Explain the V- I characteristics of LDR with diagram. OR Explain charging and discharging of a capacitor.	U	8M	CO1
7.	Explain colour coding for carbon and metal film resistors. OR Differentiate intrinsic and extrinsic semiconductors.	U	8M	CO1, CO3
8.	Explain the formation of N-type material. OR Draw &explain the V- I characteristics of P-N junction diode .	U	8M	CO3

BOARD DIPLOMA EXAMINATION, (C-20)
DBME- FIRST YEAR EXAMINATION
ELECTRONIC COMPONENTS AND DEVICES (BM -106)

Time: 3Hours Total Marks: 80M

PART- A10×3M=30M

Instructions: (1) Answer all questions
(2) Each question carries three marks
(3) Answers should be brief and straight to the point and shall not exceed five simple sentences.

1.	Define Self Inductance.	R	3M	CO1
2.	Define the term Relay.	R	3M	CO2
3	List any three differences between primary cell and secondary cell.	U	3M	CO2
4	Define the term doping.	R	3M	CO3
5	List the applications of Zener diode.	U	3M	CO4
6	State the need of filter circuits in rectifier	U	3M	CO5
7	Compare drift & diffusion current.	R	3M	CO6
8	Define g_m factor of a FET.	R	3M	CO8
9	List the different biasing techniques.	R	3M	CO7
10	Define the term stability factors.	R	3M	CO7

PART-B 5 x 8 = 40 marks

Answer either (A) or (B) from each questions from part-B

Each question carries eight marks

11	Explain the V- I characteristics of LDR with diagram. or Explain charging and discharging of a capacitor.	U	8M	CO1
12	Explain the formation of P-N junction. or Draw & Explain the V- I characteristics of P-N junction diode .	U	8M	CO3
13	Explain the simple Zener voltage regulator with diagram. Or Explain the working of full wave rectifier using centre- tapped transformer.	U	8M	CO4
14	Explain the construction and working of NPN transistor. Or Explain the input and output characteristics of CE mode.	U	8M	CO6

15 Explain the working of Enhancement MOSFET.

Or

Explain the working of JFET. U 8M CO8

PART- C1×10M=10M

Instructions: (1) Answer the following question

(2) Each question carries ten marks.

(3) Answers should be comprehensive and the criterion for valuation is the content but not the length of the answer.

16 Of the four biasing circuits shown below for a BJT, which circuit can have maximum bias stability. Justify your answer

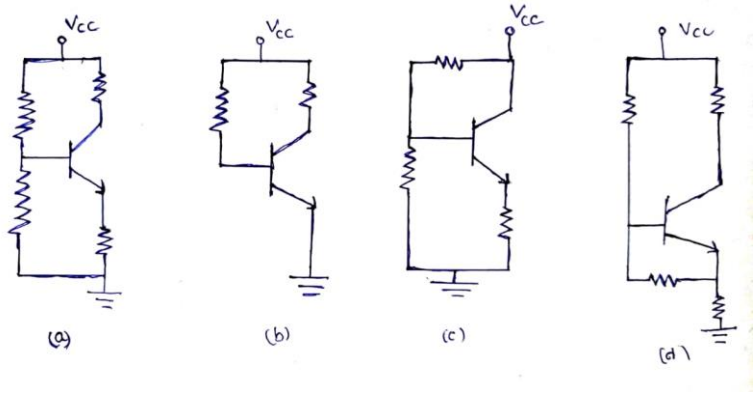

An 10M CO7

Engineering Drawing

Course Code	Course title	No of periods/week	Total no of periods	Marks for FA	Marks for SA
BM-107	**Engineering Drawing**	06	180	40	60

TIME SCHEDULE

S.No	Unit Title	No. of Drawing plates	No. Of Periods	Marks to be awarded	Short Answer Questions	Essay type Questions
1	Importance of Engineering Drawing	--	01	-	-	-
2	Engineering Drawing Instruments	01	05	-	-	-
3	Free hand lettering & Numbering	01	06	05	1	-
4	Dimensioning Practice	01	09	05	1	-
5	Geometrical constructions	03	24	15	1	1
6	Projections of Points, Lines, Planes & Auxiliary Planes	03	21	05	1	
7	Projections of Solids	01	12	10		1
8	Sections of Solids	01	21	10	-	1
9	Orthographic Projections	01	30	10	-	1
10	Isometric Views	01	30	10	-	1
11	Development of surfaces	01	21	10	-	1
Total		**14**	**180**	**80**	**04**	**06**

Course Objectives and Course Outcomes

Course Objectives	1.Upon completion of the course the student shall able to understand the basic graphic skills and use them in preparation of engineering drawings, their reading and interpretation

CO No		Course Outcome
CO1	**BM-107.1**	Practice the use of engineering drawing instruments
CO2	**BM-107.2**	Familiarise with the conventions to be followed in engineering drawing as per BIS
CO3	**BM-107.3**	Construct the i) basic geometrical constructions ii) engineering curves
CO4	**BM-107.4**	Visualise and draw the orthographic projections of i) Points ii) Lines iii) Regular Planes iv) Regular Solids V) Sections of Regular Solids
CO5	**BM-107.5**	Visualise and draw the isometric views of machine components
CO6	**BM-107.6**	Draw the developments of surfaces of regular solids and use them to make the components used in daily life

LEARNING OUTCOMES

Upon completion of the course the student shall able to

1.0 Understand the basic concepts of Engineering Drawing

1.1 State the importance of drawing as an engineering communication medium.

1.2 State the necessity of B.I.S. Code of practice for Engineering Drawing.

1.3 Explain the linkages between Engineering drawing and other subjects of Mechanical engineering

2.0 Use of Engineering Drawing Instruments

2.1 Select the correct instruments to draw the different lines / curves

2.2 Use correct grade of pencil to draw different types of lines and for different purposes

2.3 Select and use appropriate scales for a given application.

2.4 Identify different drawing sheet sizes as per I.S. and Standard Lay- outs.

2.5 Prepare Title block as per B.I.S. Specifications.

2.6 Identify the steps to be taken to keep the drawing clean and tidy.

Drawing Plate 1: (Having two exercises)

3.0 Write Free Hand Lettering and Numbers

3.1. Write titles using vertical lettering and numerals of 7mm, 10mm and 14mm height

3.2. Write titles using sloping lettering and numerals of 7mm, 10mm and 14mm height

3.3. Select suitable sizes of lettering for different layouts and applications

Drawing plate 2: (Having 5 to 6 exercises)

4.0 Understand Dimensioning Practice

4.1 Acquaint with the conventions, notations, rules and methods of dimensioning in engineering drawing as per the B.I.S.

4.2 Dimension a given drawing using standard notations and desired system of dimensioning.

Drawing Plate 3: (Having 08 to10 exercises)

5.0 Apply Principles of Geometric Constructions

5.1 Practice the basic geometric constructions like i) dividing a line into equal parts ii) exterior and interior tangents to the given two circles iii) tangent arcs to two given lines and arcs.

5.2 Draw any regular polygon using general method when i) side length is given ii) inscribing circle radius is given iii) describing circle radius is given.

5.3 Draw the conics using general and special methods,

5.4 Draw the engineering curves like i) involute ii) cycloid iii) helix.

5.5 Identify the applications of the above constructions in engineering practice.
Drawing Plate -4: Having problems up to construction of polygon.
Drawing Plate -5: Having problems of construction of conics.
Drawing Plate -6: Having problems of construction of involute, cycloid and helix

6.0 Projections of points, lines, planes & auxiliary planes

6.1 Explain the basic principles of the orthographic projections.
6.2 Visualise and draw the projection of a point with respect to reference planes (HP&VP).
6.3 Visualise and draw the projections of straight lines with respect to two reference Planes (up to lines parallel to one plane and inclined to other plane).
6.4 Visualise and draw the projections of planes (up to planes perpendicular to one plane and inclined to other plane).
6.5 Identify the need of Auxiliary views for a given engineering drawing.
6.6 Draw the auxiliary views of a given engineering component
Drawing Plate -7: Having problems up to projection of points and Lines (15 exercises)
Drawing Plate -8: Having problems of projection of planes (6 exercises)
Drawing Plate -9: Having problems on auxiliary planes (Having 4 exercises)

7.0 Draw the Projections of Solids

7.1 Visualise and draw the projections of regular solids like Prisms, Pyramids, Cylinder, Cone...(up to axis of solids parallel to one plane and inclined to other plane)
Drawing plate No.10: Having problems of projection of solids (10 exercises)

8.0 Appreciate the need of Sectional Views

8.1 Identify the need to draw sectional views.
8.2 Differentiate between true shape and apparent shape of section.
8.3 Draw sectional views and true sections of regular solids by applying the principles of hatching.
Drawing Plate–11: Having problems of section of solids (6 exercises)

9.0 Apply principles of orthographic projection

9.1 Draw the orthographic views of an object from its pictorial drawing.
9.2 Draw the minimum number of views needed to represent a given object fully.
Drawing Plate 12 : (Having 10 to 12 exercises)

10.0 Prepare pictorial drawings

10.1 Identify the need of pictorial drawings.
10.2 Differentiate between isometric scale and true scale.
10.3 Prepare Isometric views from the given orthographic drawings.
Drawing plate 13: (Having 10 to 12 exercises)

11.0 Interpret Development of surfaces of different solids

11.1 State the need for preparing development drawing.
11.2 Draw the development of simple engineering objects and their truncations (cubes, prisms, cylinders, cones, pyramid)
11.3 Prepare development of surface of engineering components like i) funnelii) 90^0 elbow iii) Tray
Drawing plate No. 14: (Having 05 exercises)

Competencies and Key competencies to be achieved by the student

S.No	Major topic	Key Competency
1.	Importance of Engineering Drawing	• Explain the linkages between Engineering drawing and other subjects of study in Diploma course.
2.	Engineering Drawing Instruments	• Select the correct instruments to draw various entities in different orientation
3.	Free hand lettering & Numbering	• Write titles using sloping and vertical lettering and numerals as per B.I.S (Bureau of Indian standards)
4.	Dimensioning Practice	• Dimension a given drawing using standard notations and desired system of dimensioning
5.	Geometrical construction	• Construct ellipse, parabola, rectangular hyperbola, involute, cycloid and helix from the given data.
6.	Projection of points, Lines, Planes & Solids	• Draw the projections of points, straight lines, planes & solids with respect to reference planes (HP& VP)
7.	Auxiliary views	• Draw the auxiliary views of a given Engineering component • Differentiate between Auxiliary view and apparent view
8.	Sections of Solids	• Differentiate between true shape and apparent shape of section • Apply principles of hatching. • Draw simple sections of regular solids
9.	Orthographic Projection	• Draw the minimum number of views needed to represent a given object fully.
10.	Isometric Views	• Differentiate between isometric scale and true scale. • Draw the isometric views of given objects,.
11.	Development of surfaces	• Prepare development of Surface of regular solids and other components like i) funnel ii) 90^0 elbow iii) Tray

CO-PO/PSO MATRIX

CO No	PO1	PO2	PO3	PO4	PO5	PO6	PO7	PSO1	PSO2	PSO3
BM-107.1	3	2	2				1	2	3	1
BM-107.2	3	2	2				1	2	3	1
BM-107.3	3	2	2				1	2	3	1
BM-107.4	3	2	2				1	2	3	1
BM-107.5	3	2	2				1	2	3	1
BM-107.6	3	2	2				1	2	3	1
BM-107.7	3	2						3		
Average	**3**	**2**	**2**				**1**	**3**	**3**	**1**

3=Strongly mapped 2=Moderately mapped 1=Slightly mapped

HYPONATED COURSE CONTENTS:

NOTES:

1.B.I.S Specification should invariably be followed in all the topics.

2. A-3 Size Drawing Sheets are to be used for all Drawing Practice Exercises.

1.0 The importance of Engineering Drawing

Explanation of the scope and objectives of the subject of Engineering Drawing Its importance as a graphic communication -Need for preparing drawing as per standards – SP-46 –1988 – Mention B.I.S - Role of drawing in -engineering education – Link between Engineering drawing and other subjects of study.

2.0 Engineering drawing Instruments

Classifications: Basic Tools, tools for drawing straight lines, tools for curved lines, tools for measuring distances and special tools like mini drafter & drafting machine – Mentioning of names under each classification and their brief description -Scales: Recommended scales reduced & enlarged -Lines: Types of lines, selection of line thickness - Selection of Pencils -Sheet Sizes: A0, A1, A2, A3, A4, A5, Layout of drawing sheets in respect of A0, A1, A3 sizes, Sizes of the Title block and its contents - Care and maintenance of Drawing Sheet,

3.0 Free hand lettering & numbering

Importance of lettering – Types of lettering -Guide Lines for Lettering
Practicing of letters & numbers of given sizes (7mm, 10mm and 14mm)
Advantages of single stroke or simple style of lettering - Use of lettering stencils

4.0 Dimensioning practice

Purpose of engineering Drawing, Need of B.I.S code in dimensioning -Shape description of an Engineering object -Definition of Dimensioning size description -Location of features, surface finish, fully dimensioned Drawing -Notations or tools of dimensioning, dimension line extension line, leader line, arrows, symbols, number and notes, rules to be observed in the use of above tools -Placing dimensions: Aligned system and unidirectional system (SP-46-1988)-Arrangement of dimensions Chain, parallel, combined progressive, and dimensioning by co-ordinate methods-The rules for dimensioning standard, features “Circles (holes) arcs, angles, tapers, chamfers, and dimension of narrow spaces.

5.0 Geometric Construction

Division of a line: to divide a straight line into given number of equal parts

Construction of tangent lines: to draw interior and exterior tangents to two circles of given radii and centre distance.

Construction of tangent arcs:

i) To draw tangent arc of given radius to touch two lines inclined at given angle (acute, right and obtuse angles).

ii)Tangent arc of given radius touching a circle or an arc and a given line.

iii)Tangent arcs of radius R, touching two given circles internally and externally.

Construction of polygon: construction of any regular polygon by general method for given side length, inscribing circle radius and describing/superscribing circle radius

Conics: Explanation of Ellipse, Parabola, Hyperbola, as sections of a double cone and a loci of a moving point, Eccentricity of above curves – Their Engg. Applications viz., Projectiles, reflectors, Cooling Towers, P-V Diagram of a Hyperbolic process - Construction of any conic section of given eccentricity by general method - Construction of ellipse by concentric circles method, Oblong Method and Arcs of circles method - Construction of parabola by rectangle method and Tangent method - Construction of rectangular hyperbola

General Curves: Involute, Cycloid and Helix, explanations as locus of a moving point, their engineering application, viz., Gear tooth profile, screw threads, springs etc. – their construction

6.0 Projection of points, lines and planes &auxiliary views

Classification of projections, Observer, Object, Projectors, Projection, Reference Planes, Reference Line, Various angles of projections –Differences between first angle and third angle projections

Projections of points in different quadrants

Projections of straight line -

(a) Parallel to both the planes.
(b) Perpendicular to one of the planes.
(c) Inclined to one plane and parallel to other planes

Projections of regular planes

(a) Plane parallel to one of the reference planes
(b) Plane perpendicular to HP and inclined to VP and vice versa.

Auxiliary views

Need for drawing auxiliary views -Explanation of the basic principles of drawing an auxiliary views explanation of reference plane and auxiliary plane - Partial auxiliary view.

7.0 Projections of regular solids

(a) Axis perpendicular to one of the planes
(b) Axis parallel to VP and inclined to HP and vice versa.

8.0 Sections of Solids

Need for drawing sectional views – what is a sectional view - Hatching – Section of regular solids inclined to one plane and parallel to other plane

9.0 Orthographic Projections

Meaning of orthographic projection - Using a viewing box and a model – Number of views obtained on the six faces of the box, - Legible sketches of only 3 views for describing object -Concept of front view, top view, and side view sketching these views for a number of engg objects - Explanation of first angle projection. – Positioning of three views in First angle projection - Projection of points as a means of locating the corners of the surfaces of an object – Use of miter line in drawing a third view when other two views are given -Method of representing hidden lines -Selection of minimum number of views to describe an object fully.

10.0 Pictorial Drawings

Brief description of different types of pictorial drawing viz., Isometric, oblique, and perspective and their use - Isometric drawings: Isometric axes, angle between them, meaning of visual distortion in dimensions - Need for an isometric scale, difference between Isometric scale, and true scale - difference between Isometric view and Isometric projection - Isometric and non-Isometric lines -Isometric drawing of common features like rectangles, circular - shapes, non-isometric lines – Drawing the isometric views for the given orthographic projections -Use of box / offset method

11.0 Development of Surfaces

Need for preparing development of surface with reference to sheet metal work-Concept of true length of a line with reference to its orthographic projection when the line is (i) parallel to the plane of projection (ii) inclined to one principal and parallel to the other -Development of simple solids like cubes, prisms, cylinders, cones, pyramid and truncation of these solids-Types of development: Parallel line and radial line development -Procedure of drawing development of funnels, 90^0 elbow pipes, Tray.

REFERENCE BOOKS

1. P I Varghese, Engineering Graphics-McGraw-hill
2. BasantAgarwal& C.M Agarwal, Engineering Drawing - (McGraw-hill)
3. N.D.Bhatt, Engineering Drawing- Charotar publishing house

Table specifying the scope of syllabus to be covered for Unit Test-I , II & III.

BM-107 :: ENGINEERING DRAWING

Unit Test - 1

Q.No	Question from the topic	Marks allocated
Part A (20 marks)		
1	Free hand lettering & Numbering	5
2	Dimensioning Practice	5
3	Geometrical constructions	5
4	Geometrical constructions	5
Part - B (20 marks)		
5	Geometrical constructions	10
6	Projections of Points, Lines, Planes & Auxiliary Planes	10

Unit Test - 2

Q.No	Question from the topic	Marks allocated
Part A (20 marks)		
1	Free hand lettering & Numbering	5
2	Dimensioning Practice	5
3	Geometrical constructions	5
4	Geometrical constructions	5
Part - B (20 marks)		
5	Orthographic Projections	10
6	Projections of Solids Sections of Solids	10

Unit Test – 3

Q.No	Question from the topic	Marks allocated
Part A (20 marks)		
1	Free hand lettering & Numbering	5
2	Dimensioning Practice	5
3	Geometrical constructions	5
4	Geometrical constructions	5
Part - B (20 marks)		
5	Isometric Views	10
6	Development of surfaces	10

C-20-BM-107

BOARD DIPLOMA EXAMINATIONS
MODEL QUESTION PAPER – UNIT TEST - 1
DBME – I YEAR EXAMINATION
ENGINEERING DRAWING

Total Marks : 40 M **Time : 2 hours**

Instructions: **01.** **All the dimensions are in mm**
02. **Use first angle projections only**
03. **Due Weightage will be given for the dimensioning and neatness**

PART – A **04 x 05M=20M**

01. **Answer all the questions**
02. **Each question carries FIVE marks**

01. Write the following in single stroke capital vertical lettering of size 10mm
ORTHOGRAPHIC PROJECTIONS
02. Redraw the given fig. and dimension it according to SP-46:1988.Assume suitable scale

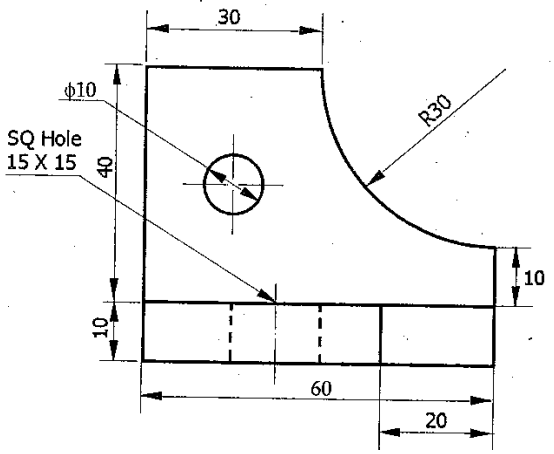

03. Draw internal common tangents to two unequal circles of radii 26mm and 20mm.The distance between the circles is 75mm.
04. Inscribe a regular hexagon in a circle of diameter 50 mm.

PART – B **02 X 10M = 20M**

01. **Answer all questions**
02. **Each question carries TEN marks**

05. Draw the involute of a circle of diameter 40 mm and also draw a tangent to the curve at a distance of 50 mm from the centre of the circle.

06. Draw the projections of a regular pentagon of side length 40 mm inclined to the H.P. by 30^0 and perpendicular to V.P. using auxiliary plane method.

BOARD DIPLOMA EXAMINATIONS
MODEL QUESTION PAPER
BME– I-YEAR
ENGINEERING DRAWING

Instructions: 01. All the dimensions are in mm
02. Use first angle projections only
03. Due weightage will be given for the dimensioning and neatness

PART – A **05M x 04=20M**

01. Answer all the questions
02. Each question carries FIVE marks

01. Write the following in single stroke capital vertical lettering of size 10mm
ORTHOGRAPHIC PROJECTIONS

02. Redraw the given fig. and dimension it according to SP-46:1988.Assume suitable scale

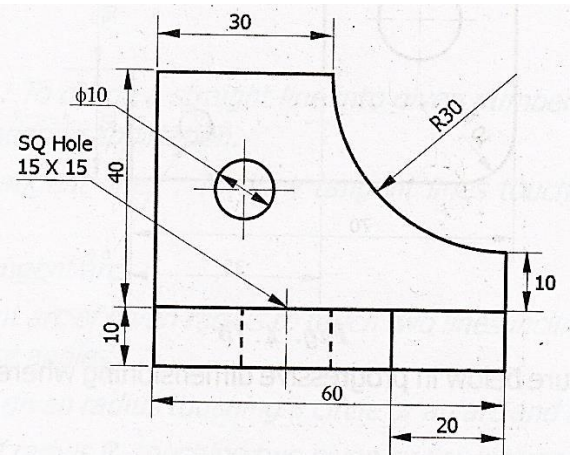

03. Draw internal common tangents to two unequal circles of radii 26mm and 20mm.The distance between the circles is 75mm.

04. Draw the projections of a regular pentagon of side length 40 mm inclined to the H.P. by 30^0 and perpendicular to V.P. using auxiliary plane method

PART – B **10M X 04 = 40M**

01. Answer any FOUR of the following questions

02. Each question carries TEN marks

05. Draw the involute of a circle of diameter 30 mm and also draw a tangent to the curve at a distance of 60 mm from the centre of the circle.

06. A right circular cone of height 80 mm and base radius 60 mm is resting in the H.P. on one of its generators and its axis is parallel to V.P. Draw the projections of the solid.

07. A regular hexagonal prism of height 80 mm and base side 40 mm is resting in the H.P. on its base. It is cut by an auxiliary inclined plane of 60^0inclination passing through the axis at a distance of 30 mm from the top base. Draw the sectional views of the solid and the true section.

08. A pentagonal pyramid of height 80 mm and base side 40 mm is resting in the H.P. on its base such that one of the sides of the base is perpendicular to the V.P. It is cut by a section plane perpendicular to the V.P. and inclined to the H.P. by 60^0 and passing through the axis at a distance of 25 mm from the base. Draw the development of the lateral surface of the truncated pyramid.

09. Draw the front view, top view and left side view of the object shown in the fig.

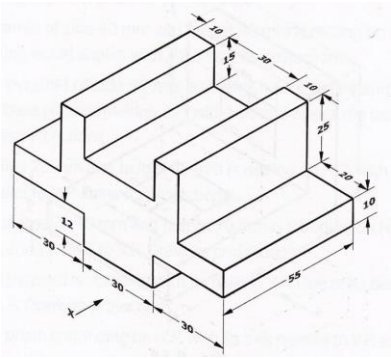

10. Draw the isometric view of the component whose orthographic projections are given below

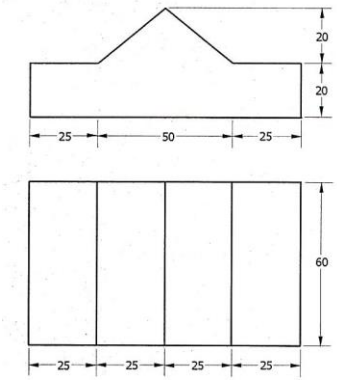

Course Code	Course title	No of periods/week	Total no of periods	Marks for FA	Marks for SA
BM-108	ELECTRONIC COMPONENTS & DEVICES LAB	06	180	40	60

S No	Unit Title	No. of Periods	COs Mapped
1	Study and use of Electronic equipment , Testing of Electronic components & characteristics	33	CO1
2	Soldering practice and Desoldering practice	17	CO2
3	Semiconductor Diodes and Rectifiers	44	CO3
4	Identification of transistors and Characteristics of CB/CE configuration; Applications	48	CO4
5	Characteristics of FET,LED and LDR	38	CO5
	Total	**180**	

Course Objectives	To have hands on practice on Soldering, de-soldering of circuits and preparation of PCB for given circuits
	To get acquainted with the usage of electronic equipment
	To test electronic devices and obtain their characteristics
	To have hands on practice on construct simple electronic circuits

CO No		Course Outcome
CO1	**BM-108.1**	Work with electronic equipment to test electronic components.
CO2	**BM-108.2**	Perform soldering and desolderingof electronic components.
CO3	**BM-108.3**	Verify the working of semiconductor diodes (PN-junction diode and Zener diode) and its applications (rectifiers).
CO4	**BM-108.4**	Demonstrate the transistor as a switch and Obtain the characteristics of BJT (CB, CE) and designing its applications
CO5	**BM-108.5**	Demonstrate the characteristics of FET, LED and LDR.

LEARNING OUTCOMES:

1. To study and use of Electronic equipment and Testing of Electronic components & characteristics

1.1 Voltmeter, Ammeter, DMM, Analog Multi meter and Regulated Power Supply, CRO.
1.2 Measurement of DC Voltage and DC current,
1.3 Measure the value of Resistor and verify the value with colour coding.
1.4 Measurement of resistance for three band resistors.
1.5 Measurement of capacitance of electrolyte capacitors.
1.6 Measurement of inductance.

2 Soldering practice and Desoldering practice

3 Characteristics of PN diode, Zener diode and Rectifiers

3.1 Determine Knee voltage,
3.2 Identify Cutoff, and Linear regions
3.3 Connect a 6V lamp in series with diode and test it on DC power supply
3.4 Heat the diode with a soldering Iron and observe the effect on reverse current
3.5 To draw the forward& reverse characteristics of Zener diode and determine Breakdown Voltage.
3.6 Connect resistance ladder circuit (3 resistors) and measure the voltages at the
3.7 output by varying input voltage while Zener is reverse biased.
3.8 Implementing Half wave rectifier with and without filter
3.9 Implementing Full wave rectifier with and without filter
3.10 Implementing Bridge rectifier with and without filter
3.11 Implementing Voltage Doubler circuit
3.12 Connect a diode IN4007 in series with a 230V, 60W Lamp and test it. (Record the observations)

4. Identification of transistors, Characteristics of CB/CE configuration; Applications

4.1 Identify the transistor and its leads,
4.2 Test PNP and NPN transistor with Multimeter
4.3 Obtain the input and output characteristics of CB configuration and Calculate the dynamic resistance and current gain of NPN / PNP transistors
4.4 Obtain the input and output characteristics of CE configuration and Calculate the dynamic resistance and current gain of NPN / PNP transistors Show Transistor as a switch

5. Obtaining the characteristics of FET, LED and LDR.

5.1 Identification of leads of FET & Obtain the FET drain characteristics and calculate the drain resistance, and the trans-conductance.
5.2 Obtain the LED Characteristics
5.3 Obtain the LDR Characteristics.

NOTE:

a) Design of 5V/12V DC power Supply
b) Design of switch using transistor.
c) Simple application of LDR.
d) Simple application of LED.

CO-PO/PSO MATRIX

CO No	PO1	PO2	PO3	PO4	PO5	PO6	PO7	PSO1	PSO2	PSO3
BM-108.1	3							3		
BM-108.2	3						1	3		
BM-108.3	3				1			3		
BM-108.4	3				1			3		
BM-108.5	3	2						3		
Average	**3**	**2**	**1**	**1**	**1**		**1**	**3**		

3=Strongly mapped 2=Moderately mapped 1=Slightly mapped
mapped

Scheme of Valuation for end Lab Practical Examination :

A. Writing Aim, Apparatus, Formula, Graph, Precautions carries 10 (Ten) Marks
B. For Drawing the table, taking Readings, Calculation work, Drawing the graph, finding result carries 15 (Fifteen) Marks
C. Viva Voice 05 (Five) Marks

Total 30 (Thirty) Marks

PHYSICS LAB PRACTICE
(C-20 CURRIUCULUM COMMON TO ALL BRANCHES)

Subject Code	Subject Title	Periods per week	Total periods per year
BM-109 A	Physics Laboratory	03	45

TIMESCHEDULE

S.No	Name of the Experiment	No.of Periods
1.	Hands on practice on Vernier Calipers	03
2.	Hands on practice on Screw gauge	03
3.	Verification of Parallelogram law of forces and Triangle law of forces	03
4.	Simple pendulum	03
5.	Velocity of sound in air – (Resonance method)	03
6.	Focal length and Focal power of convex lens (Separate & Combination) (**Single lens**	03
7.	Refractive index of solid using traveling microscope	03
8.	Boyle's law verification	03
9.	Meter bridge	03
10.	Mapping of magnet lines of force and locate null points	03
	DEMONSTRATION EXPERIMENTS	
11.	Surface tension of liquid using traveling microscope	03
12.	Coefficient of viscosity by capillary method	03
	Revision	06
	Test	03
	Total	**45**

Objectives:

Upon completion of the course the student shall be able to

1.0 Practice with Vernier calipers to determine the volumes and areas of a cylinder and sphere and their comparison etc .

2.0 Practice with Screw gauge to determine thickness of a glass plate, cross sectional area of a wire and volumes of sphere and also their comparison etc

3.0 Verify the parallelogram law and Triangle law

4.0 Determine the value of acceleration due to gravity using Simple Pendulum

5.0 Determine the velocity of sound in air at room temperature and its value at zero degree centigrade.

6.0 Calculate the Focal length and focal power of convex lenses using distant object method , U-V method , U-V graph and 1 / U – 1 / V graph methods and their comparison.

7.0 Determine the refractive index of a solid using travelling microscope.

8.0 Verify the Boyle's law employing a Quill tube.

9.0 Determine the specific resistance of material of a wirel using Meter Bridge.

10.0 Drawing magnetic lines of force under N-S and N-N methods and locate null points.

11.0 Determine the surface tension of a liquid using travelling Microscope (**Demo)**

12.0 Determine the viscosity of a liquid using capillary method (**Demo)**

Competencies and Key competencies to be achieved by the student

Name of the Experiment	Competencies	Key competencies
1. Hands on practice on Vernier Calipers(03)	• Find the Least count • Fix the specimen in posit • Read the scales • Calculate the physical quantities of given object	• Read the scales • Calculate the requisite physical quantities of given objects
2. Hands on practice on Screw gauge(03)	• Find the Least count • Fix the specimen in posit • Read the scales • Calculate thickness of glass place and cross section of wire and other quantities	• Read the scales • Calculate thickness of given glass plate • Calculate cross section of wire and other quantities
3. Verification of Parallelogram law of forces and Triangle law of forces(03)	• Fix suitable weights • Note the positions of threads on drawing sheet • Find the angle at equilibrium point • Construct parallelogram • Compare the measured diagonal • Construct triangle • Find the length of sides • Compare the ratios	• Find the angle at equilibrium point • Constructing parallelogram • Construct triangle • Compare the ratios of force and length

4. Simple pendulum(03)	• Fix the simple pendulum to the stand • Adjust the length of pendulum • Find the time for number of oscillations • Find the time period • Calculate the acceleration due to gravity • Draw l-T and l-T^2 graph	• Find the time for number of oscillations • Find the time period • Calculate the acceleration due to gravity • Draw l-T and l-T^2 graph
5. Velocity of sound in air –Resonance method (03)	• Arrange the resonance apparatus • Adjust the reservoir level for booming sound • Find the first and second resonanting lengths • Calculate velocity of sound	• Adjust the reservoir level • Find the first and second resonanting lengths • Calculate velocity of sound at room temperature • Calculate velocity of sound at 0^0 C
6. Focal length and Focal power of convex lens (Separate & Combination) (03)	• Fix the object distance • Find the Image distance • Calculate the focal length and power of convex lens and combination of convex lenses • Draw u-v and 1/u – 1/v graphs	• Calculate the focal length and power of convex lens • Draw u-v and 1/u – 1/v graphs

7. Refractive index of solid using traveling microscope(03)	• Find the least count of vernier on microscope • Place the graph paper below microscope • Read the scale • Calculate the refractive index of glass slab	• Read the scale • Calculate the refractive index of glass slab
8. Boyle's law verification (03)	• Note the atmospheric pressure • Fix the quill tube to retort stand • Find the length of air column • Find the pressure of enclosed air • Find and compare the calculated value P x l	• Find the length of air column • Find the pressure of enclosed air • Find the value P x l
9. Meter bridge(03)	• Make the circuit connections • Find the balancing length • Calculate unknown resistance • Find the radius of wire • Calculate the specific resistance	• Find the balancing length • Calculate unknown resistance • Calculate the specific resistance

10. Mapping of magnet lines of force(03)	• Draw magnetic meridian • Placed the bar magnet in NN and NS directions • Draw magnetic lines of force • Locate the neutral points along equatorial and axial lines	• Draw magnetic lines of force • Locate the neutral points along equatorial and axial lines
11. Surface tension of liquid using traveling microscope(03)	• Find the least count of vernier on microscope • Focus the microscope to the lower meniscus & bent pin • Read the scale • Calculate height of liquid rise • Calculate the surface tension of water	• Read the scale • Calculate height of liquid rise • Calculate the surface tension of water
12.. Coefficient of viscosity by capillary method(03)	• Find the least count of vernier • Fix the capillary tube to aspiratory bottle • Find the mass of collected water • Find the pressure head • Calculate rate of volume of liquid collected • Find the radius of capillary tube • Calculate the viscosity of water using capillary method	• Find the pressure head • Calculate rate of volume of liquid collected • Find the radius of capillary tube • Calculate the viscosity of water

Scheme of Valuation for end Lab Practical Examination :

D. Writing Aim, Apparatus, Formula, Graph, Precautions carries 10 (Ten) Marks
E. For Drawing the table, taking Readings, Calculation work, Drawing the graph, finding result carries 15 (Fifteen) Marks
F. Viva Voice 05 (Five) Marks

Total **30 (Thirty) Marks**

- **Course outcomes**

Course Outcomes	CO1	Experiments with Vernier calipers, Screw gauge, Parallelogram law and Triangle law
	CO2	Experiments with Simple pendulum, Resonance apparatus (Velocity of sound in air)
	CO3	Experiments with Convex lens, Refractive index of solid by travelling microscope
	CO4	Experiments with quill tube (Boyles law verification), Meter bridge, Mapping of magnetic lines of force
	CO5	Experiments with Surface tension and Viscosity

- **COs-PO mapping strength (as per given table)**

	PO1	PO2	PO3	PO4	PO5	PO6	PO7
CO1	3			1	1	1	1
CO2	3	2	2		1		
CO3	3		2			1	2
CO4	3	2			2		
CO5	3		1	2		1	2

3 = strongly mapped 2= moderately mapped 1= slightly mapped

CHEMISTRY LABORATORY
(C-20 curriculum common to all Branches)

SubjectCode	SubjectTitle	Periodsperweek	Totalperiodsperyear
BM-109B	Chemistry Laboratory	0 3	45

CO1	Operate and practice volumetric apparatus and preparation of standard solution
CO2	Evaluate and judge the neutralization point in acid base titration
CO3	Evaluate the end point of reduction and oxidation reaction
CO4	Judge the stable end point of complex formation, stable precipitation
CO5	Judge operate and demonstrate and perform precise operations with instrument for investigation of water pollution parameters

PO CO mapping

Course code BM-109B	**Chemistry Laboratory No of Cos;5**				**No Of periods 45**
POs	**Mapped with CO No**	**CO periods addressing PO in Col 1 NO**	**%**	**Level 1,2,3**	**Remarks**
PO1	CO1,CO2,CO3, CO4,CO5	12	26.66	2	>40% level 3 (highly addressed) 25% to 40% level2(moderately addressed 5% to 25% level1 (Low addressed < 5%(not addressed)
PO2	CO1,CO2,CO3, CO4,CO5	9	20	1	
PO3					
PO4	CO1,CO2,CO3, CO4,CO5	12	26.66	2	
PO5	CO2,CO3, CO4,CO5	12	26.66	2	
PO6					
PO7					

COs-POs mapping strength (as per given table)

	PO1	PO2	PO3	PO4	PO5	PO6	PO7	PSO1	PSO2	PSO3
CO1	2	3		1				1		
CO2	2	3		2	2			1		
CO3	2	3		2	2			1		
CO4	2	3		2	2			1		
CO5	2	3		2	2			1		

3=strongly mapped
2= moderately mapped
1= slightly mapped

Note:
The gaps in CO and PO mapping will be achieved by one or more appropriate activities from the following:
i) Seminars ii) Tutorials iii) Guest Lectures iv) Assignments v) Quiz competitions vi) Industrial visit vii) Tech Fest viii) Mini project ix) Group discussions x) Virtual classes xi) Library visit for e-books

TIMESCHEDULE

S.No	Name of the Experiment	No.ofPeriods	Mapped with COs
1.	a) Recognition of chemical substances and solutions used in the laboratory by senses. b) Familiarization of methods for Volumetricanalysis	03	CO1
2.	Preparation of Std Na_2CO_3 and making solutions of different dilution	03	CO1
3.	Estimation of HCl solution using Std.Na_2CO_3 solution	03	CO2
4.	Estimation of NaOH using Std.HCl solution	03	CO2
5.	Estimation of H_2SO_4usingStd.NaOH solution	03	CO2
6.	Estimation of Mohr's Salt using Std.$KMnO_4$	03	CO3
7.	Determination of acidity of water sample	03	CO2
8.	Determination of alkalinity of water sample	03	CO2
9.	Determination of total hardness of water using Std.EDTA solution	03	CO4
10.	Estimation of Chlorides present in water sample	03	CO4
11.	Estimation of Dissolved Oxygen(D.O)in water sample	03	CO5
12.	Determination of pH using pH meter	03	CO5
13.	Determination of conductivity of water and adjusting ionic strength	03	CO5
14.	Determination of turbidity of water	03	CO5
15.	Estimation of total solids present in water sample	03	CO5
	Total:	**45**	

Objectives:

Upon completion of the course the student shall be able to

1.0 Practice volumetric measurements (using pipettes, measuring jars, volumetric flask, burettes) and gravimetric measurements (using different types of balances), making dilutions, etc.To identify the chemical compounds and solutions by senses.

2.0 Practice making standard solutions with pre weighed salts and to make solutions of desired dilutions using appropriate techniques.

3.0 Conduct titrations adopting standard procedures and using Std. Na_2CO_3solutionfor estimation of HCl

4.0 Conduct titrations adopting standard procedures and using Std. HCl solution for estimation of NaOH

5.0 Conduct titrations adopting standard procedures and using Std. NaOH solution for estimation of H_2SO_4

6.0 Conduct titrations adopting standard procedures and using Std.$KMnO_4$solution for estimation of Mohr'sSalt

7.0 Conduct titrations adopting standard procedures to determine the acidity of given samples of water (One ground water and one surface / tap water, and rain water if available)

8.0 Conduct titrations adopting standard procedures to determine the alkalinity of given samples of water (One ground water and one surface / tap water)

9.0 Conduct titrations adopting standard procedures to determine the total hardness of given samples of water (One ground water and one surface / tap water) using Std. EDTA solution

10.0 Conduct titrations adopting standard procedures to determine the chlorides present in the given samples of water and wastewater (One ground water and one surface / tap water)

11.0 Conduct the test using titrometric / electrometric method to determine Dissolved Oxygen (D.O) in given water samples (One sample from closed container and one from open container / tap water)

12.0 Conduct the test on given samples of water / solutions (like soft drinks, sewage, etc.) to determine their pH using standard pH meter

13.0 Conduct the test on given samples of water / solutions

a) To determine conductivity

b) To adjust the ionic strength of the sample to the desired value

14.0 Conduct the test on given samples of solutions (coloured and non coloured) to determine their turbidity in NTU

15.0 To determine the total solids present in given samples of water (One ground water and one surface / tap water)

Competencies and Key competencies to be achieved by the student

Name of the Experiment (No of Periods)	Competencies	Key competencies
Familiarization of methods for Volumetric analysis. Recognition of chemical substances And solutions (03)	-	--
Preparation of Std Na_2CO_3 and making solutions of different dilution(03)	▪ Weighing the salt to the accuracy of .01 mg ▪ Measuring the water with volumetric flask, measuring jar, volumetric pipetteand graduated pipette ▪ Making appropriate dilutions	▪ Weighing the salt to the accuracy of .01 mg ▪ Measuring the water with volumetric flask, measuring jar, volumetric pipette and graduated pipette ▪ Making appropriate dilutions
Estimation of HCl solution using Std. Na_2CO_3solution (03)	▪ Cleaning the glassware and rinsing with appropriate solutions ▪ Making standard solutions ▪ Measuring accurately the standard solutions and titrants ▪ Filling the burette with titrant ▪ Fixing the burette to the stand ▪ Effectively Controlling the flow of the titrant ▪ Identifying the end point ▪ Making accurate observations ▪ Calculating the results	▪ Making standard solutions ▪ Measuring accurately the standard solutions and titrants ▪ Effectively Controlling the flow of the titrant ▪ Identifying the end point ▪ Making accurate observations
Estimation of NaOH using Std.HCl solution (03)		
Estimation of H_2SO_4 using Std.NaOH solution (03)		
Estimation of Mohr's Salt using Std.$KMnO_4$ (03)		
Determination of acidity of water sample (03)		
Determination of alkalinity of water sample (03)		
Determination of total hardness of water using Std. EDTA solution (03)		
Estimation of Chlorides present in water sample (03)		
Estimation of Dissolved Oxygen(D.O) in water sample (By titration method) (03)		
	▪ Familiarize with instrument	▪ Prepare standard

Determination of pH using pH meter (03) Determination of conductivity of water and adjusting ionic strength to required level (03) Determination of turbidity of water (03)	▪ Choose appropriate 'Mode' / 'Unit' ▪ Prepare standard solutions / buffers, etc. ▪ Standardize the instrument with appropriate standard solutions ▪ Plot the standard curve ▪ Make measurements accurately ▪ Follow Safety precautions	solutions / buffers, etc. ▪ Standardize the instrument with appropriate standard solutions ▪ Plot the standard curve ▪ Make measurements accurately
Estimation of total solids present in water sample (03)	▪ Measuring the accurate volume and weight of sample ▪ Filtering and air drying without losing any filtrate ▪ Accurately weighing the filter paper, crucible and filtrate ▪ Drying the crucible in an oven	▪ Measuring the accurate volume and weight of sample ▪ Filtering and air drying without losing any filtrate ▪ Accurately weighing the filter paper, crucible and filtrate

SCHEME OF VALUATION

A) Writing Chemicals, apparatus ,principle and procedure 5M

B) Demonstrated competencies 20M

Making standard solutions

Measuring accurately the standard solutions and titrants

Effectively controlling the flow of the titrant

Identifying the end point

Making accurate observations

C) Viva-voce 5M

Total 30M

Course code	Course Title	No. of Periods/Weeks	Total No. of periods	Marks for FA	Marks for SA
BM-110	Computer Fundamentals Lab	3	90	40	60

Time schedule:

S.No.	Chapter/Unit Title	No. of sessions each of 3 periods duration	No.of Periods
1.	Computer hardware Basics	2	6
2.	Windows Operating System	2	6
3.	MS Word	8	24
4.	MS Excel	7	21
5.	MS PowerPoint	5	15
6.	Adobe Photoshop	6	18
	Total periods	**30**	**90**

S.No.	Chapter/Unit Title	No.of Periods	CO's Mapped
1.	Computer hardware Basics	6	CO1
2.	Windows Operating System	6	CO1
3.	MS Word	24	CO2
4.	MS Excel	21	CO3
5.	MS PowerPoint	15	CO4
6	Adobe Photoshop	18	CO5
	Total periods	**90**	

Course Objectives	i)To know Hardware Basics ii)To familiarize operating systems iii)To use MS Office effectively to enable to students use these skills in future courses iv) To use Adobe Photoshop in image editing.

Course Outcomes	At the end of the course students will be able to		
	CO1	BM-110.1	Identify hardware and software components
	CO2	BM--110.2	Prepare documents with given specifications using word processing software
	CO3	BM--110.3	Use Spread sheet software to make calculation and to draw various graphs / charts.
	CO4	BM--110.4	Use Power point software to develop effective presentation for a given theme or topic.
	CO5	BM--110.5	Edit digital or scanned images using Photoshop

CO-PO/PSO MATRIX

CO NO.	PO1	PO2	PO3	PO4	PO5	PO6	PO7	PSO1	PSO2	PSO3
BM-110.1	3	3	3	3	3	3	3	3	2	3
BM-110.2	3	3	3	3	3	3	3	3	2	3
BM-110.3	3	3	3	3	3	3	3	3	2	3
BM-110.4	3	3	3	3	3	3	3	3	2	3
BM-110.5	3	3	3	3	3	3	3	3	2	3
Average	**3**	**3**	**3**	**3**	**3**	**3**	**3**	**3**	**2**	**3**

3=Strongly mapped , 2=moderately mapped, 1=slightly mapped

Learning Outcomes:

I. Computer Hardware Basics

1. a).To Familiarize with Computer system and hardware connections
   b).To Start and Shut down Computer correctly
   c).To check the software details of the computer
2. To check the hardware present in your computer

II. Windows's operating system

3. To Explore Windows Desktop
4. Working with Files and Folders
5. Windows Accessories: Calculator – Notepad – WordPad – MS Paint

III. Practice with MS-WORD

6. To familiarize with Ribbon layout of MS Word
   Home – Insert- Page layout – References – Review- View.
7. To practice Word Processing Basics
8. To practice Formatting techniques
9. To insert a table of required number of rows and columns
10. To insert Objects, Clipart and Hyperlinks
11. To use Mail Merge feature of MS Word
12. To use Equations and symbols features

IV.Practice with MS-EXCEL

13. To familiarize with MS-EXCEL layout
14. To access and enter data in the cells
15. To edit a spread sheet- Copy, Cut, Paste, and selecting Cells
16. To use built in functions and Formatting Data
17. To create Excel Functions, Filling Cells
18. To enter a Formula for automatic calculations
19. To sort and filter data in table.
20. To present data using Excel Graphs and Charts.
21. To develop lab reports of respective discipline.
22. To format a Worksheet in Excel, Page Setup and Print

V. Practice with MS-POWERPOINT

23. To familiarize with Ribbon layout features of PowerPoint 2007.
24. To create a simple PowerPoint Presentation
25. To set up a Master Slide in PowerPoint
26. To insert Text and Objects
27. To insert a Flow Charts
28. To insert a Table
29. To insert a Charts/Graphs
30. To insert video and audio
31. To practice Animating text and objects
32. To Review presentation

VI. Practice with Adobe Photoshop

33.To familiarize with standard toolbox
34. To edit a photograph.
35. To insert Borders around photograph.
36. To change Background of a Photograph.
37. To change colors of Photograph.
38. To prepare a cover page for the book in your subject area.
39. To adjust the brightness and contrast of the picture so that it gives an elegant look.
40. To type a word and apply the shadow emboss effects.

Key competencies:

Expt No	Name of Experiment	Competencies	Key competencies
1 (a).	To familiarize with Computer system and hardware connections	a. Identify the parts of a Computer system: i). CPU ii). Mother Board iii) Monitor iv) CD/DVD Drive v) Power Switch vi) Start Button vii) Reset Button b. Identify and connect various peripherals c. Identify and connect the cables used with computer system d. Identify various ports on CPU and connect Keyboard & Mouse.	Connect cables to external hardware and operate the computer
1 (b).	To Start and Shut down Computer correctly	a. Log in using the password b. Start and shut down the computer c. Use Mouse and Key Board	a. Login and logout as per the standard procedure b. Operate mouse &Key Board

1 (c).	To Explore Windows Desktop	a. Familiarize with Start Menu, Taskbar, Icons and Shortcuts b. Access application programs using Start menu, Task manager c. Use Help support	a. Access application programs using Start menu b. Use taskbar and Task manager
2.	To check the software details of the computer	a. Find the details of Operating System being used b. Find the details of Service Pack installed	Access the properties of computer and find the details
3.	To check the hardware present in your computer	a. Find the CPU name and clock speed b. Find the details of RAM and Hard disk present c. Access Device manager using Control Panel and check the status of devices like mouse and key board d. Use My Computer to check the details of Hard drives and partitions e. Use the Taskbar	a. Access device manager and find the details b. Type /Navigate the correct path and Select icon related to the details required
4.	Working with Files and Folders	a. Create folders and organizing files in different folders b. Use copy / paste move commands to organize files and folders	a. Create files and folders Rename , arrange and search for the required folder/file
	Working with Files and Folders Continued....	c. Arrange icons – name wise, size, type, Modified d. Search a file or folder and find its path e. Create shortcut to files and folders (in other folders) on Desktop f. Familiarize with the use of My Documents g. Familiarize with the use of Recycle Bin	b. Restore deleted files from Recycle bin

5.	To use Windows Accessories: Calculator – Notepad – WordPad – MS Paint	a. Familiarize with the use of Calculator b. Access Calculator using Run command c. Create Text Files using Notepad and WordPad and observe the difference in file size d. Use MS paint and create .jpeg, .bmp files using MS Paint	a. Use windows accessories and select correct text editor based on the situation. b. Use MS pain to create /Edit pictures and save in the required format.
6.	To familiarize with Ribbon layout of MS word. – Home – Insert- page layout- References-Review-View	a. Create/Open a document b. Use Save and Save as features c. Work on two Word documents simultaneously d. Choose correct Paper size and Printing options	a. Create a Document and name appropriately and save b. Set paper size and print options
7.	To practice Word Processing Basics	a. Typing text b. Keyboard usage c. Use mouse (Left click / Right click / Scroll) d. Use Keyboard shortcuts e. Use Find and Replace features in MS- word f. Use Undo and Redo Features g. Use spell check to correct Spellings and Grammar	a. Use key board and mouse to enter/edit text in the document. b. Use shortcuts c. Use spell check/ Grammar features for auto corrections.
8.	To practice Formatting techniques	a. Formatting Text b. Formatting Paragraphs c. Setting Tabs d. Formatting Pages e. The Styles of Word f. Insert bullets and numbers g. Themes and Templates h. Insert page numbers, header and footer	a. Format Text and paragraphs and use various text styles. b. Use bullets and numbers to create lists c. Use Templates /Themes d. Insert page numbers date, headers and footers

9.	To insert a table of required number of rows and columns	a. Edit the table by adding the fields – Deleting rows and columns –inserting sub table – marking borders. Merging and splitting of cells in a Table b. Changing the background colour of the table c. Use table design tools d. Use auto fit – fixed row/ column height/length – Even distribution of rows / columns features e. Convert Text to table and Table to Text f. Use Sort feature of the Table to arrange data in ascending/descending order	a. Insert table in the word document and edit b. Use sort option for arranging data.
10.	To Insert objects, clipart and Hyperlinks	a. Create a 2-page document. &Insert hyperlinks and t Bookmarks. b. Create an organization chart c. Practice examples like preparing an Examination schedule notice with a hyperlink to Exam schedule table.	a. Insert hyperlinks &Bookmarks b. Create organization charts/flow charts
11.	To Use Mail merge feature of MS Word	a. Use mail merge to prepare individually addressed letters b. Use mail merge to print envelopes.	Use Mail merge feature
12.	To use Equations and symbols features.	a. Explore various symbols available in MS Word b. Insert a symbol in the text c. Insert mathematical equations in the document	Enter Mathematical symbols and Equations in the word document
13.	To Practice with MS-EXCEL	a. Open /create an MS Excel spreadsheet and familiarize with MS Excel 2007 layout like MS office Button- b. Use Quick Access Toolbar- Title Bar- Ribbon-Worksheets-Formula Bar-Status Bar	a. Familiarize with excel layout and use b. Use various features available in toolbar

14.	To access and Enter data in the cells	a. Move Around a Worksheets-Quick access -Select Cells b. Enter Data-Edit a Cell-Wrap Text-Delete a Cell Entry-Save a File-Close Excel	a. Access and select the required cells by various addressing methods b. Enter data and edit
15.	To edit spread sheet Copy, Cut, Paste, and selecting cells	a. Insert and Delete Columns and Rows-Create Borders-Merge and Center b. Add Background Color-Change the Font, Font Size, and Font Color c. Format text with Bold, Italicize, and Underline-Work with Long Text-Change a Column's Width	Format the excel sheet
16.	To use built in functions and Formatting Data	a. Perform Mathematical Calculations verify -AutoSum b. Perform Automatic Calculations-Align Cell Entries	Use built in functions in Excel
17.	To enter a Formula for automatic calculations	a. Enter formula b. Use Cell References in Formulae c. Use Automatic updating function of Excel Formulae d. Use Mathematical Operators in Formulae e. Use Excel Error Message and Help	Enter formula for automatic calculations
18.	To Create Excel Functions, Filling Cells	a. Use Reference Operators b. Work with sum, Sum if , Count and Count If Functions c. Fill Cells Automatically	a. Create Excel sheets involving cross references and equations b. Use the advanced functions for conditional calculations
19.	To sort and filter data in table	a. Sort data in multiple columns b. Sort data in a row c. Sort data using Custom order d. Filter data in work sheet	a. Refine the data in a worksheet and keep it organized b. Narrow a worksheet by selecting specific choice

20.	To Practice Excel Graphs and Charts	a. Produce an Excel Pie Chart b. Produce c. Excel Column Chart	a. Use data in Excel sheet to Create technical charts and graphs Produce Excel Line Graph b. Produce a Pictograph in Excel
21.	To develop lab reports of respective discipline	Create Lab reports using MS Word and Excel	a. Insert Practical subject name in Header and page numbers in Footer
22.	To format a Worksheet in Excel, page setup and print	a. Shade alternate rows of data b. Add currency and percentage symbols c. Change height of a row and width of a column d. Change data alignment e. Insert Headers and Footers f. Set Print Options and Print	a. Format Excel sheet b. Insert headers &footers and print
23.	To familiarize with Ribbon layout &features of PowerPoint 2007.	Use various options in PowerPoint a. Home b. Insert c. Design d. Animation e. Slideshow f. View g. Review	Access required options in the tool bar
24.	To create a simple PowerPoint Presentation	a. Insert a New Slide into PowerPoint b. Change the Title of a PowerPoint Slide c. PowerPoint Bullets d. Add an Image to a PowerPoint Slide e. Add a Textbox to a PowerPoint slide	a. Create simple PowerPoint presentation with photographs/Clip Art and text boxes b. Use bullets option
25.	To Set up a Master Slide in PowerPoint and add notes	a. Create a PowerPoint Design Template b. Modify themes c. Switch between Slide master view and Normal view d. Format a Design Template Master Slide e. Add a Title Slide to a Design Template	a. Setup Master slide and format b. Add notes

		f. The Slide Show Footer in PowerPoint g. Add Notes to a PowerPoint Presentation	
26.	To Insert Text and Objects	a. Insert Text and objects b. Set Indents and line spacing c. Insert pictures/ clipart d. Format pictures e. Insert shapes and word art f. Use 3d features g. Arrange objects	Insert Text and Objects Use 3d features
27.	To insert a Flow Chart / Organizational Charts	a. Create a Flow Chart in PowerPoint b. Group and Ungroup Shapes c. Use smart art	Create organizational charts and flow charts using smart art
28.	To insert a Table	a. PowerPoint Tables b. Format the Table Data c. Change Table Background d. Format Series Legend	Insert tables and format
29.	To insert a Charts/Graphs	a. Create 3D Bar Graphs in PowerPoint b. Work with the PowerPoint Datasheet c. Format a PowerPoint Chart Axis d. Format the Bars of a Chart e. Create PowerPoint Pie Charts f. Use Pie Chart Segments g. Create 2D Bar Charts in PowerPoint h. Format the 2D Chart e. Format a Chart Background	Create charts and Bar graphs, Pie Charts and format.
30.	To Insert audio & video, Hyperlinks in a slide Add narration to the slide	a. Insert sounds in the slide and hide the audio symbol b. Adjust the volume in the settings c. Insert video file in the format supported by PowerPoint in a slide d. Use automatic and on click options e. Add narration to the slide f. Insert Hyperlinks	a. Insert Sounds and Video in appropriate format. b. Add narration to the slide c. Use hyperlinks to switch to different slides and files

31.	To Practice Animation effects	a. Apply transitions to slides b. To explore and practice special animation effects like Entrance, Emphasis, Motion Paths &Exit	Add animation effects
32.	Reviewing presentation	a. Checking spelling and grammar b. Previewing presentation c. Set up slide show d. Set up resolution e. Exercise with Rehearse Timings feature in PowerPoint f. Use PowerPoint Pen Tool during slide show g. Saving h. Printing presentation (a) Slides (b) Hand-out	a. Use Spell check and Grammar feature b. Setup slide show c. Add timing to the slides d. Setup automatic slide show
33	To familiarize with standard toolbox	a. Open Adobe Photoshop b. Use various tools such as i. The Layer Tool ii. The Color & Swatches Tool iii. Custom Fonts & The Text Tool iv. Brush Tool v. The Select Tool vi. The Move Tool vii. The Zoom Tool viii. The Eraser ix. The Crop Tool x. The Fill Tool	Open a photograph and save it in Photoshop
34	To edit a photograph	a. Use the Crop tool b. Trim edges c. Change the shape and size of a photo d. Remove the part of photograph including graphics and text	a. Able to edit image by using corresponding tools.
35	To insert Borders around photograph	a. Start with a single background layer b. Bring the background forward c. Enlarge the canvas d. Create a border color e. Send the border color to the back f. Experiment with different colors	Able to create a border or frame around an image to add visual interest to a photo

36	To change Background of a Photograph	a. open the foreground and background image b. Use different selection tools to paint over the image c. Copy background image and paste it on the foreground. d. Resize and/or drag the background image to reposition. e. In the Layers panel, drag the background layer below the foreground image layer.	Able to swap background elements using the Select and Mask tool and layers.
37	To change colors of Photograph	a. Change colors using: i) Color Replacement tool ii) **Hue/Saturation adjustment layer tool**	Able to control color saturation
38	To prepare a cover page for the book in subject area	a. open a file with height 500 and width 400 for the cover page. b. apply two different colors to work area by dividing it into two parts using Rectangle tool. c. Copy any picture and place it on work area→ resize it using free transform tool. d. Type text and apply color and style e. Apply effects using blended options	Able to prepare cover page for the book
39	To adjust the brightness and contrast of picture to give an elegant look	a. open a file. b. Go to image→ adjustments→ Brightness/Contrast. c. adjust the brightness and contrast. d. Save the image.	Able to control brightness/contrast.
40	To type a word and apply the shadow emboss effects	a. open a file b. Select the text tool and type text. c. Select the typed text go to layer→ layer style→ blended option→ drop shadow, inner shadow, bevel and emboss→ contour→ satin→ gradient overlay d. Save the image.	Able to apply shadow emboss effects

Table specifying the scope of syllabus to be covered for unit tests

Unit Test	Learning outcomes to be covered
Unit test-1	From 1 to 8
Unit test-2	From 9 to 22
Unit test-3	From 23 to 40

I Year Internal Lab Examination

UNIT TEST - I

MODEL QUESTION PAPER

COMPUTER FUNDAMENTALS LAB

SCHEME: C-20 **SUBJ CODE: BM-110**

MAX MARKS:40 **Time:90Min**

1. Identify the internal hardware components of a PC and assemble them.
2. Identify the external components or peripherals of a PC and connect them.
3. Identify the components on motherboard.
4. Perform the process of placing processor on CPU slot.
5. Perform the process of removing and placing the RAM in the corresponding slot.
6. Identify the CMOS battery and test whether it is working it or not.
7. Find details of following:
   a) Operating System being used.
   b) Processor name
   c) RAM
   d) Hard disk
8. Create a folder by your name, search a file or folder and find its path.
9. Draw the National Flag using MS Paint.
10. Create a word document that contains TEN names of your classmates (boys-5 & girls-5) and perform the following tasks:
    a) Save the document to your desktop.
    b) Sort the names in each list alphabetically.
    c) Set line spacing to 1.15.
    d) Use bullet points for the names in both lists separately.

I Year Internal Lab Examination

UNIT TEST - II

MODEL QUESTION PAPER

COMPUTER FUNDAMENTALS LAB

SCHEME: C-20 **SUBJ CODE:BM-110**

MAX MARKS:40 **Time:90Min**

1. Write individually addressed letters to your friends about the Republic Day celebration using Mail Merge.
2. Create a Word document about your college and insert page numbers in footer and College Name in header.
3. Create your class time table using Tables in MS Word.
4. Create a 2-page document about your College& insert hyperlinks for courses offered in the college and insert Bookmarks next to College Name.
5. Write individually addressed letters to your friends (at least 5 members) to intimate the External Examination time table using Mail Merge.
6. Write an equation $\frac{(x+y)^2}{(x-y)^2} = \frac{x^2+2xy+y^2}{x^2-2xy+y^2}$ in MS word.
7. Create the organizational structure of your college in MS Word.
8. Create a spreadsheet by totaling marks of 3 or more subjects, then calculate percentage and hence find grade based on boundary conditions of FIVE students:

   Grades O >= 90%, A >=80%, B >=70%, C >=60%, D >=50%, E >=40%, F <40%
9. Create a Excel spreadsheet for the following data, making sure that the cell marked with Category (A1) is pasted in cell A1 in the spreadsheet and perform the questions below.

Category (A1)	Product Name	Quantity	Inventory	Price per Unit	Total Price
Office Supplies	Binder	2	20	12.99	25.98
Office Supplies	Pencil	20	20	0.99	
Electronics	Samsung 4K Smart TV	1	5	399.00	
Electronics	Bluetooth Speakers	4	5	44.49	
Computers	Lenovo X230 12in Laptop	2	2	279.90	

   a). Change the format of the “Total Price” column to “Currency” format.
   b) Calculate Total Price by writing formula.
   c) Turn on filtering for the table.
   d) Sort the table by column “Category” from A to Z.
10. Create a spreadsheet to calculate Cumulative monthly attendance for a period of Three months.

Year Internal Lab Examination
UNIT TEST - III
MODEL QUESTION PAPER
COMPUTER FUNDAMENTALS LAB

SCHEME: C-20 **SUBJ CODE: BM-110**
MAX MARKS:40 **Time:90Min**

1. Create a PowerPoint Presentation about your College in 5 slides only.

2. Create a PowerPoint Presentation on Computer Hardware in minimum 5 slides.
3. Create a PowerPoint Presentation on Computer Fundamentals with *Entrance, Emphasis* effects in minimum 5 slides.
4. Create a PowerPoint Presentation on any topic with special animation effects like *Entrance, Motion Paths &Exit.*
5. Resize the image using Photoshop.
6. Change the background of a Photograph.
7. Edit an image by using
   a) Crop tool.
   b) Resize the image
   c) Save the new image with new name keeping original image as it is.
8. A Picture of two parrots (parrots.jpg) is given to you. Make anyone of one of the parrots in Black & White.
9. Convert a color image to monochrome and improve quality of photograph.
10. Copy three pictures and fit into the empty frames.

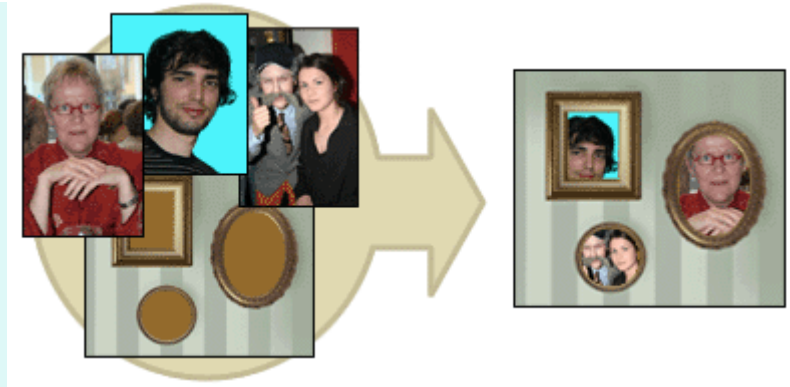

BOARD DIPLOMA EXAMINATIONS

DIPLOMA IN COMPUTER ENGINEERING

MODEL PRACTICAL QUESTION PAPER-YEAR END EXAM

COMPUTER FUNDAMENTALS LAB

SCHEME: C-20 **SUBJ CODE:BM-110**

MAX MARKS:60 **TIME: 3HOURS**

1. Identify the internal hardware components of a PC and assemble them.
2. Identify the external components or peripherals of a PC and connect them.
3. Write the procedure to create the files and folders
4. Write the procedure to access Calculator, Paint and Notepad application
5. Write the procedure to perform the following in MS Word
   (a) Change the Font Size
   (b) Change the Font Style
   (c) Change the Text Size
6. Write the procedure to perform the following in MS Word
   (a)Change the Font Color.
   (b)Use Various Text Alignment Options.
   (c)Format text in Bold, Italic and Underline.
7. Create the hierarchy of your family in MS Word.
8. Write the procedure to perform the following in MS Word:
   (a) Insert a Table
   (b) Add a Row
   (c) Add a column
   (d) Delete a Row
   (e) Delete a column
9. Write the procedure to use Equation $\frac{(x+y)^2}{(x-y)^2} = \frac{x^2+2xy+y^2}{x^2-2xy+y^2}$ and Symbols.
10. Write the procedure to perform the following in MS Excel
    (a) To Modify Column Width
    (b) To Modify Row Height
    (c) Format text in Bold, Italic, and Underline.
11. Write the procedure to create charts and Graphs in MS Excel.
12. Write the procedure to create simple Power Point Presentation on your college in Three slides.
13. Write the procedure to perform Animation on Text and Objects in your presentation.
14. Take a photographic image. Give a title for the image. Put the border. Write your names. Write the Name of Institution and Place.
15. Prepare a cover page for the book in your subject area. Plan your own design.
16. You are given a picture of a flower and associated background (Extract.jpg).Extract the Flower only from that and organize it on a background. Select your own background for organization.
17. You are given a picture (BrightnessContrast.jpg). Adjust the brightness and contrast of the picture so that it gives an elegant look.
18. You are given a picture (position.jpg). Position the picture preferably on a plain background of a color of your choice - Positioning include rotation and scaling.
19. Remove the arrows and text from the given photographic image(Filename: photo.jpg).
20. Type a word; apply the following effects. Shadow Emboss.

III SEMESTER

3rd SEMESTER

ENGINEERING MATHEMATICS-II

Course Code	Course Title	No. of Periods/week	Total No. of periods	Marks for FA	Marks for SA
BM-301	Engineering Mathematics-II	4	60	20	80

Subject Code	Name of the Subject	Instruction period / week		Total Period / Sem	Scheme of Examination			
		Theory	Practical /Tutorial		Duration (hours)	Sessional Marks	End Exam Marks	Total Marks
THEORY								
BM-301	Engineering Mathematics- II	4	-	60	3	20	80	100
BM-302	Electronic Circuits	6	-	90	3	20	80	100
BM-303	Network Analysis	6	-	90	3	20	80	100
BM-304	Digital Electronics	6	-	90	3	20	80	100
BM-305	Programming In 'C' and MATLAB	6	-	90	3	20	80	100
PRACTICAL								
BM-306	Electronic Circuits Lab Practice	-	4	60	3	40	60	100
BM-307	Network Analysis Lab Practice	-	3	45	3	40	60	100
BM-308	Digital Electronics Lab Practice	-	4	60	3	40	60	100
BM-309	Programming in 'C' & MATLAB Practice	-	3	45	3	40	60	100
TOTAL		**28**	**14**	**630**	**-**	**260**	**640**	**900**

S.No.	Unit Title	No. of periods	COs mapped
1	Indefinite Integration	22	CO1
2	Definite Integration and its applications	24	CO2
3	Differential Equations of first order	14	CO3
	Total Periods	**60**	

Course Objectives	(i) To understand the concepts of indefinite integrals and definite integrals with applications to engineering problems. (ii) To understand the formation of differential equations and learn various methods of solving them.

Course Outcomes	CO1	Integrate various functions using different methods.
	CO2	Evaluate definite integrals with applications.
	CO3	Obtain differential equations and solve differential equations of first order and first degree.

ENGINEERING MATHEMATICS – II

Learning Outcomes

Unit-I

C.O. 1 Integrate various functions using different methods.

L.O.1.1. Explain the concept of Indefinite integral as an anti-derivative.

1.2. State the indefinite integral of standard functions and properties of Integrals $\int (u + v)\,dx$ and $\int ku\,dx$ where k is constant and u, v are functions of x.

1.3. Solve integration problems involving standard functions using the above rules.

1.4. Evaluate integrals involving simple functions of the following type by the method of substitution.

i) $\int f(ax + b)\,dx$ where $f(x)dx$ is in standard form.

ii) $\int [f(x)]^n f'(x)\,dx$

iii) $\int f'(x)/[f(x)]\,dx$

iv) $\int f\{g(x)\} g'(x)\,dx$

1.5. Find the integrals of $\tan x$, $\cot x$, $\sec x$ and $\operatorname{cosec} x$ using the above.

1.6. Evaluate the integrals of the form $\int \sin^m x \cos^n x\,dx$ where m and n are suitable positive integers.

1.7. Evaluate integrals of suitable powers of $\tan x$ and $\sec x$.

1.8. Evaluate the Standard integrals of the functions of the type

$$i)\ \frac{1}{a^2 + x^2}, \frac{1}{a^2 - x^2}, \frac{1}{x^2 - a^2}$$

$$ii)\ \frac{1}{\sqrt{a^2 + x^2}}, \frac{1}{\sqrt{a^2 - x^2}}, \frac{1}{\sqrt{x^2 - a^2}}$$

$$iii)\ \sqrt{x^2 - a^2}, \sqrt{x^2 + a^2}, \sqrt{a^2 - x^2}$$

1.9. Evaluate the integrals of the type

$$\int \frac{1}{a+bSin\theta} d\theta, \int \frac{1}{a+b\cos\theta} d\theta \text{ and } \int \frac{1}{a\cos\theta + b\sin\theta + c} d\theta .$$

1.10. Evaluate integrals using decomposition method.

1.11. Solve problems using integration by parts.

1.12 Use Bernoulli's rule for evaluating the integrals of the form $\int u.v dx$.

1.13. Evaluate the integrals of the form $\int e^x [f(x) + f'(x)] dx$.

Unit-II

C.O.2 Evaluate definite integrals with applications.

L.O.2.1. State the fundamental theorem of integral calculus

2.2. Explain the concept of definite integral.

2.3. Solve problems on definite integrals over an interval using the above concept.

2.4. State various properties of definite integrals.

2.5. Evaluate simple problems on definite integrals using the above properties.

Syllabus for Unit test-I completed

2.6. Explain definite integral as a limit of sum by considering an area.

2.7. Find the areas under plane curves and area enclosed between two curves using integration.

2.8. Obtain the mean value and root mean square value of the functions in any given interval.

2.9. Obtain the volumes of solids of revolution.

2.10. Solve some problems using Trapezoidal rule, Simpson's 1/3 rule for approximation of integrals.

Unit -III

C.O. 3 Form differential equations and solve differential equations of first order and first degree.

L.O. 3.1 Define a Differential equation, its order and degree

3.2 Find order and degree of a given differential equation.

3.3 Form a differential equation by eliminating arbitrary constants.

3.4 Solve the first order and first degree differential equations by variables separable method.

3.5 Solve Homogeneous differential equation of first order and first degree.

3.6 Solve exact differential equation of first order and first degree.

3.7 Solve linear differential equation of the form dy/dx + Py = Q, where P and Q are functions of x or constants.

3.8 Solve Bernoulli's differential equation reducible to linear form.

3.9 Solve simple problems arising in engineering applications.

Syllabus for Unit test-II completed

C-20
Engineering Mathematics – II
CO/PO – Mapping

	PO1	PO2	PO3	PO4	PO5	PO6	PO7	PSO1	PSO2	PSO3
CO1	3	2	2	2				3	1	2
CO2	3	3	3	3				3	3	3
CO3	3	3	3	3				3	3	3
Avg	3	2.6	2.6	2.6				3	2.3	2.6

3 = Strongly mapped (High), **2 =** Moderately mapped (Medium), **1 =** Slightly mapped (Low)

PO5: Appropriate quiz programme may be conducted at intervals and duration as decided by concerned teacher.

PO6: Seminars on applications of mathematics in various engineering disciplines are to be planned and conducted.

PO7: Such activities are to be planned that students visit library to refer standard books on Mathematics and latest updates in reputed national and international journals, attending seminars, learning mathematical software tools.

PSO1: An ability to understand the concepts of basic mathematical techniques and to apply them in various areas like computer programming, civil constructions, fluid dynamics, electrical and electronic systems and all concerned engineering disciplines.

PSO2: An ability to solve the Engineering problems using latest software tools, along with analytical skills to arrive at faster and appropriate solutions.

PSO3: Wisdom of social and environmental awareness along with ethical responsibility to have a successful career as an engineer and to sustain passion and zeal for real world technological applications.

Engineering Mathematics – II
PO- CO – Mapping strength

PO no	Mapped with CO no	CO periods addressing PO in column I		Level (1,2 or 3)	Remarks
		Number	%		
1	CO1, CO2, CO3	60	100%	3	>40% Level 3 Highly addressed
2	CO1, CO2, CO3	60	100%	3	
3	CO1, CO2, CO3	60	100%	3	
4	CO2, CO3	38	63.3%	3	25% to 40% Level 2 Moderately addressed
5					
6					
7					
PSO 1	CO1, CO2, CO3	60	100%	3	5% to 25% Level 1 Low addressed
PSO 2	CO1, CO2, CO3	40	66.6%	3	
PSO 3	CO1, CO2, CO3	48	75%	3	<5% Not addressed

ENGINEERING MATHEMATICS – II
COURSE CONTENTS

Unit-I

Indefinite Integration.

1. Integration regarded as anti-derivative – Indefinite integrals of standard functions. Properties of indefinite integrals. Integration by substitution or change of variable. Integrals of tan x, cot x, sec x, cosec x. Integrals of the form $\int \sin^m x.\cos^n x\,dx$, where at least one of m and n is odd positive integers. Integrals of suitable powers of tanx. secx and cosecx.cotx by substitution.

Evaluation of integrals which are reducible to the following forms:

$$i)\ \frac{1}{a^2+x^2}, \frac{1}{a^2-x^2}, \frac{1}{x^2-a^2}$$

$$ii)\ \frac{1}{\sqrt{a^2+x^2}}, \frac{1}{\sqrt{a^2-x^2}}, \frac{1}{\sqrt{x^2-a^2}}$$

$$iii)\ \sqrt{x^2-a^2}, \sqrt{x^2+a^2}, \sqrt{a^2-x^2}$$

Integration by decomposition of the integrand into simple rational, algebraic functions.
Integration by parts, Bernoulli's rule and integrals of the form $\int e^x [f(x) + f'(x)]\,dx$.

Unit-II

Definite Integral and its applications:

2. Definite integral-fundamental theorem of integral calculus, properties of definite integrals, evaluation of simple definite integrals. Definite integral as the limit of a sum. Area under plane curves – Area enclosed between two curves. Mean and RMS values of a function on a given interval Volumes of solids of revolution. Trapezoidal rule, Simpson's 1/3 rule to evaluate an approximate value of a define integral.

Unit -III

Differential Equations:

3. Definition of a differential equation-order and degree of a differential equation- formation of differential equations-solutions of differential equations of first order and first degree using methods, variables separable, homogeneous, exact, linear differential equation, Bernoulli's equation.

Textbook:

Engineering Mathematics-II, a textbook for third semester diploma courses, prepared & prescribed by SBTET, AP.

Reference Books:

1. B.S. Grewal, Higher Engineering Mathematics, Khanna Publishers.
2. Schaum's Outlines Differential Equations, Richard Bronson & Gabriel B. Costa
3. M.Vygodsky, Mathematical Handbook: Higher Mathematics, Mir Publishers, Moscow.

BLUE PRINT

S. No	Chapter/Unit title	No of Periods	Weightage allotted	Marks wise distribution of weightage				Question wise distribution of weightage				COs mapped
				R	U	Ap	An	R	U	Ap	An	
1	**Unit – I: Indefinite Integration**	22	28	11	11	06	0	2	2	2	0	**CO1**
2	**Unit – II: Definite Integration and its applications**	24	33	11	03	11	08	2	1	2	1	**CO2**
3	**Unit – III: Differential Equations of first order**	14	19	03	03	03	10	1	1	1	1	**CO3**
Total		**60**	**80**	**25**	**17**	**20**	**18**	**5**	**4**	**5**	**2**	

R: Remembering Type : 25 Marks
U: understanding Type : 17 Marks
Ap: Application Type : 20 Marks
An: Analysing Type : 18 Marks

Engineering Mathematics – II

Unit Test Syllabus

Unit Test	Syllabus
Unit Test-I	From L.O 1.1 to L.O 2.5
Unit Test-II	From L.O 2.6 to L.O 3.9

UNIT TEST MODEL PAPERS

Unit Test I **C –20, BM-301**

State Board of Technical Education and Training, A. P

Third Semester

Subject name: **Engineering Mathematics-II**

Sub Code: **BM-301**

Time : 90 minutes Max.marks:40

Part-A **16Marks**

Instructions: (1) Answer **all** questions.
(2) First question carries **four** marks and the remaining questions carry **three** marks each.

1. Answer the following.

   Evaluate $\int x^8 dx$ (CO1)

   Evaluate $\int \frac{1}{\sqrt{4-x^2}} dx.$ (CO1)

   $\int e^x \left(f(x) + f'(x) \right) dx = e^x f(x) + c$ is true/false (CO1)

   a. Evaluate $\int_0^{\frac{\pi}{2}} \cos x dx$ (CO2)

2. Evaluate $\int \left(3\cos ec^2 x - 2\tan x \sec x + \frac{1}{x} \right) dx.$ (CO1)

3. Evaluate $\int \frac{\sin(\log x)}{x} dx.$ (CO1)

4. Evaluate $\int e^x \sin 2x dx.$ (CO1)

5. Evaluate $\int_0^{\frac{\pi}{2}} \sin^2 x dx$ (CO2)

Part-B **3×8=24**

Instructions: (1) Answer **all** questions.
(2) Each question carries **eight** marks
(3) Answer should be comprehensive and the criterion for valuation is the content but not the length of the answer.

6. A) Evaluate $\int \frac{1}{5+4\cos x}\,dx.$ (CO1)

or

B) Evaluate $\int \sin^4 x \cos^3 x dx.$ (CO1)

7. A) Evaluate $\int \cos^{-1}\left(\frac{1-x^2}{1+x^2}\right)dx.$ (CO1)

or

B) Evaluate $\int x^4 e^{2x} dx.$ (CO1)

8. A) Evaluate $\int_0^{\frac{\pi}{2}} \cos 4x \cos x dx$ (CO2)

or

B) Evaluate $\int_0^{\frac{\pi}{2}} \frac{\sin^{10} x}{\sin^{10} x + \cos^{10} x}\,dx$ (CO2)

-o0o-

Unit Test II **C –20, BM-301**

State Board of Technical Education and Training, A. P

Third semster

Subject name: **Engineering Mathematics-II**

Sub Code: **BM-301**

Time : 90 minutes Max.marks:40

Part-A **16Marks**

Instructions: **(1) Answer all questions.**
(2) First question carries four marks and the remaining questions carry three marks each.

1. Answer the following.

   a. Volume of the curve $y = f(x)$ over the interval $[a,b]$ when rotated about X-axis is _____ (CO2)

   b. Mean value of $f(x)$ over the interval $[a,b]$ is_____ (CO2)

   c. Order of differential equation $\frac{d^2y}{dx^2} + p^2y = 0$ is_____ (CO3)

   d. Integrating factor of $\frac{dy}{dx} + Py = Q$ is_____ (CO3)

2. Find the mean value of $x^2 + 2x + 1$ over the interval $[1,2]$ (CO2)

3. Find the area enclosed by curve $x^2 = 4y$ between the lines $x = 2$ and $x = 4$ (CO2)

4. Form the differential equation by eliminating the arbitrary constants from $y = A\cos 2x + B\sin 2x.$ (CO3)

5. Solve $\frac{dy}{dx} = \sqrt{\frac{1-y^2}{1-x^2}}.$ (CO3)

Part-B **3×8=24**

Instructions: **(1) Answer all questions.**
(2) Each question carries eight marks
(3) Answer should be comprehensive and the criterion for valuation is the content but not the length of the answer.

6. A) Find the area bounded between the curve $y = x^2 - 5x$ and the line $y = 4 - 2x$ (CO2)

Or

B) Find the R.M.S value of $\sqrt{\log x}$ between the lines $x = e$ to $x = e^2$ (CO2)

7. A) Find the volume of the solid obtained by revolving the ellipse $\frac{x^2}{16} + \frac{y^2}{25} = 1$ about x axis (CO2)

or

B) Calculate the approximate value of $\int_0^6 \frac{1}{1+x}\,dx$ by taking $n = 6$ using Trapezoidal rule (CO3)

8. A) Solve $\left(y^2 - 2xy\right)dx + \left(2xy + x^2\right)dy = 0.$ (CO3)

or

B) Solve $x\frac{dy}{dx} + \frac{y}{x} = x^3y^6.$ (CO3)

-o0o-

END EXAM MODEL PAPERS

STATE BOARD OF TECHNICAL EDUCATION, A.P

THIRD SEMESTER

ENGINEERING MATHEMATICS BM-301

TIME : 3 HOURS **MODEL PAPER- I** **MAX.MARKS : 80M**

PART-A

Answer All questions. Each question carries THREE marks. **10x3=30M**

1. Evaluate $\int\left(2\sin x-3e^{x}+\frac{4}{1+x^{2}}\right)dx.$ **CO1**
2. Evaluate $\int e^{x}\sin e^{x}dx.$ **CO1**
3. Evaluate $\int \sin 3x\cos 2xdx.$ **CO1**
4. Evaluate $\int xe^{x}dx.$ **CO1**
5. Evaluate $\int_{0}^{1}\frac{1}{1+x^{2}}dx.$ **CO2**
6. Find the mean value of $y=x^{2}$ from $x=0$ to $x=1$ **CO2**
7. Find the area of the region bounded by the curve $y=\sin x$ from $x=0$ to $x=\pi$ **CO2**
8. Find the order and degree of the differential equation $\left(\frac{d^{3}y}{dx^{3}}\right)^{2}-3\left(\frac{dy}{dx}\right)^{2}-x^{2}=1$ **CO3**
9. Solve $\frac{dy}{dx}=\frac{1+y^{2}}{1+x^{2}}$ **CO3**
10. Solve $\left(x^{2}+y\right)dx+\left(y^{2}+x\right)dy=0.$ **CO3**

PART-B

Answer All questions. Each question carries EIGHT marks. 5x8=40M

11. A) Evaluate $\int \frac{3x+1}{(x-1)(x+3)}dx.$ **CO1**

Or

B) Evaluate $\int \frac{1}{5+4\cos x}dx.$ **CO1**

12. A) Evaluate $\int x\sin 3xcosxdx.$ **CO1**

Or

B) Evaluate $\int x^3\cos xdx.$ **CO1**

13. A) Evaluate $\int_0^1 \frac{x^3}{1+x^8}dx.$ **CO2**

Or

B) Evaluate $\int_0^{\frac{\pi}{2}} \frac{1}{1+\tan^3 x}dx.$ **CO2**

14. A) Find the area of the region bounded by the curves $y^2=4x$ **and** $x^2=4y$. **CO2**

Or

B) Find the R.M.S values of $\sqrt{27-4x^2}$ from $x=0$ to $x=3$ **CO2**

15. A) Find the volume of the solid generated by revolution of the ellipse $\frac{x^2}{16}+\frac{y^2}{25}=1$ about X-axis **CO2**

Or

B) Calculate the approximate value of $\int_1^{11} x^3dx$ by using Simpson's 1/3rd rule by dividing the range into 10 equal parts. **CO2**

PART-C

Answer the following question. Question carries TEN marks. 1x10=10M

16. Solve $2\sin x\frac{dy}{dx}-y\cos x=xy^3e^x.$ **CO3**

STATE BOARD OF TECHNICAL EDUCATION, A.P

THIRD SEMESTER

ENGINEERING MATHEMATICS BM- 301

TIME : 3 HOURS **MODEL PAPER-II** **MAX.MARKS : 80M**

PART-A

Answer All questions. Each question carries THREE marks. **10x3=30M**

1. Evaluate $\int\left(3e^x-2\cos x+\frac{3}{x}\right)dx.$ **CO1**
2. Evaluate $\int\cos^2 2x dx.$ **CO 1**
3. Evaluate $\int\frac{\tan^{-1}x}{1+x^2}dx.$ **CO1**
4. Evaluate $\int x\cos x dx.$ **CO1**
5. Evaluate $\int_0^2\frac{1}{\sqrt{4-x^2}}dx.$ **CO2**
6. Find the mean value of $i=a\sin t$ over the complete wave. **CO2**
7. Find the volume generated by revolving the circle $x^2+y^2=9$ from $x=0$ to $x=2$ about x-axis **CO2**
8. Obtain the differential equation by eliminating the arbitrary constants A and B from the curve $y=Ae^x+Be^{-x}$ **CO3**
9. Solve $\frac{dy}{dx}=e^{2x+y}$ **CO3**
10. Solve $\frac{dy}{dx}+\frac{y}{x}=x$ **CO3**

PART-B

Answer All questions. Each question carries EIGHT marks. 5x8=40M

11. A) Evaluate $\int \frac{1}{2x^2+3x+5}dx.$ **CO1**

Or

B) Evaluate $\int \sin^3 x\cos^5 x dx.$ **CO1**

12. A) Evaluate $\int e^x\left(\frac{2+\sin 2x}{1+\cos 2x}\right)dx.$ **CO1**

Or

B) Evaluate $\int e^{2x}x^4 dx.$ **CO1**

13. A) Evaluate $\int_0^1 \frac{\sec^2 x}{(1+\tan x)^2}dx.$ **CO2**

Or

B) Evaluate $\int_0^{\frac{\pi}{2}} \log(1+\tan\theta)\,d\theta.$ **CO2**

14. A) Find the area bounded between the curves $y=x^2$ and the line $y=3x+4$. **CO3**

Or

B) Find the R.M.S value of $\sqrt{\log x}$ between the lines $x=e$ to $x=e^2$ **CO2**

15. A) Find the volume of right circular cone using integration. **CO2**

Or

B) Find the approximate value of π from $\int_0^1 \frac{1}{1+x^2}dx$ using Trapezoidal rule by dividing $[0,1]$ into 5 equal sub-intervals. **CO2**

PART-C

Answer the following question. Question carries TEN marks. 1x10=10M

16. Solve $xy^2dy-\left(x^3+y^3\right)dx=0$ **CO3**

ELECTRONIC CIRCUITS

Course Code	Course title	No of periods/week	Total no of periods	Marks for FA	Marks for SA
BM-302	ELECTRONIC CIRCUITS	06	90	20	80

S No	Unit Title	No. of Periods	COs Mapped
1	Small Signal Amplifiers	25	CO1
2	A.F Power Amplifiers	20	CO2
3	R.F Tuned amplifiers	18	CO3
4	Feedback amplifiers	12	CO4
5	Wave Shaping circuits	15	CO5
	TOTAL	**90**	

Course Objectives	To understand different small signal amplifiers
	To understand different power amplifiers
	To explain tuned voltage, power amplifiers
	To explain different feedback amplifiers and oscillators
	To explain different wave shaping circuits

CO No		Course Outcome
CO1	**BM-302.1**	Explain the working of small signal amplifiers
CO2	**BM-302.2**	Analyse the working of different power amplifiers
CO3	**BM-302.3**	Explain the working of tuned voltage, power amplifiers
CO4	**BM-302.4**	Analyze the feedback in amplifiers
CO5	**BM-302.5**	Describe various wave shaping circuits

LEARNING OUTCOMES:

1.0 Explain the operation of Transistor Amplifiers.

1.1 Explain the purpose of an amplifier

1.2 Classify the amplifier on the basis of active device used, configuration, frequency range, function of the circuit (voltage & power), types of coupling, types of load, period of conduction.

1.3 Explain the basis of amplification by a transistor using load line concept and explain the equivalent circuit analysis and mention its use.

1.4 Draw the h-parameter model for transistor in CE, CB, CC configuration and derive the expressions for voltage gain, current gain, I/p impedance and o/p impedance for CE, CB and CC configuration.

1.5 Draw the approximate h-parameter model CE, CB &CC configuration.

1.6 Define alpha cut off frequency and Beta cut off frequency.

1.7 Draw and explain the circuit of single stage RC coupled amplifier in CE mode with potential divider type of biasing and derive the approximate voltage gain, draw the frequency response curve for an RC coupled amplifier.

1.8 Define Band Width, upper cut off frequency and lower cut off frequency.

1.9 List the factors which affect the band width of a transistor amplifier.

1.10 Show that the gain Band width product is constant.

1.11 Explain the working of CB amplifier andCC amplifier circuits with input and output wave forms.

1.12 Draw and explain the operation the FET common source amplifier circuit with self-bias.

1.13 Explain the working of CG, CD amplifier circuits with input and output wave forms.

1.14 Draw and explain two stage RC coupled amplifier using FET and derive the voltage gain for the above circuit.

1.15 State the need of Direct coupled amplifier and explain with circuit diagram and list the advantages and disadvantages of D.C. amplifiers.

1.16 Draw and explain Darlington pair configuration and list the advantages of Darlington configuration

2.0 Understand the working of AF amplifiers.

2.1 Distinguish between voltage amplifier and power amplifier.

2.2 Classify different power amplifiers using transistors.

2.3 Draw the circuit of class- A single ended transistor power amplifier and explain the working of above amplifier with graphical analysis

2.4 Explain the need for output transformer in the above circuit.

2.5 Derive the expression for output power and efficiency of the above power amplifier.

2.6 Draw and explain the phase splitter circuit.

2.7 State the input drive requirements of push-pull amplifier.

2.8 Draw and explain the class B push pull amplifier

2.9 Derive the expression for efficiency and list the advantages and disadvantages of push-pull amplifier.

2.10 Show that even harmonics are eliminated in class B push-pull amplifier

2.11 State the need for class-AB push-pull operation.

2.12 Draw the circuit of a complementary push-pull power amplifier and explain its working.

2.13 Mention the advantages of complementary power amplifier.

2.14 List different IC numbers for power amplifiers and List the applications of power amplifier.

2.15 State the necessity of Heat sink for a power transistor and power I.C. device.

2.16 List the different types of heat sinks and mounting methods.

3.0 Describe the function and performance of RF tuned voltage and power amplifier.

3.1 Explain the limitations of transistor at RF.

3.2 Classify the RF voltage amplifier on the basis of type of load.

3.3 Draw the circuit of single tuned and double tuned RF voltage amplifiers and draw the frequency response of the above amplifiers.

3.4 Express the Bandwidth in terms of resonant frequency and the qualify factor of tuned circuit.

3.5 Compare the merits and demerits of single tuned, double tuned and stagger tuned amplifiers on the basis of Band width, gain tuning facility and applications.

3.6 Explain the need for neutralizing capacitor in the RF tuned voltage amplifier.

3.7 Explain the function of RF tuned power amplifier.

3.8 Explain the reason for selecting class C operation in the RF tuned power amplifier.

3.9 Draw the basic circuit of class C power amplifier (using transistor)

3.10 Draw the wave forms of input signal, collector current and output signal of above amplifier.

3.11 Write the expression for the tank circuit efficiency of tuned RF power amplifier.

3.12 Draw and explain the circuit of harmonic generator.

3.13 Distinguish between class C amplifier and Harmonic generator.

3.14 List the applications of class C amplifier and harmonic generator

4.0 Understand the Principles of Feedback in Amplifiers

4.1 Explain the basic concept of feedback in amplifiers

4.2 Explain the difference between positive feedback and negative feedback and list advantages and disadvantages

4.3 Define feedback factor Beta (β)

4.4 Derive the voltage gain of the negative feedback amplifiers in terms of gain of the same amplifier without feedback

4.5 Classify Different negative feedback amplifiers and draw their block diagrams

4.6 List the advantages of negative feedback amplifiers with specific reference to non -linear distortion, noise stability and bandwidth.

4.7 Draw the transistor circuits with voltage feedback and current feedback

4.8 State the effect of negative feedback on the input impedance and output impedance of the different negative feedback amplifier circuits

5.0 Understand wave shaping circuits.

5.1 Define the term linear wave shaping, Time Constant of a RC circuit

5.2 Define the terms pulse width, rise time, fall time, duration, tilt, over shoot, under shoot, frequency, PRR, PRT, PRF and duty cycle with reference to a pulse and pulse train.

5.3 Draw and explain a high pass RC circuit for a step pulse and square wave input voltages

5.4 Analyze a high pass RC circuit as differentiator

5.5 Draw and explain a low pass RC circuit for a step pulse and square wave input voltages

5.6 Analyze a low pass RC circuit as an integrator.

5.7 Explain the applications of integrator and differentiator.

5.8 Explain the term Non-linear wave shaping.

5.9 Classify the clipping circuits using junction diode on the basis of limiting levels of the input signal.

5.10 Draw the diode clipper circuit and draw the transfer characteristics.

5.11 Explain the operation of series, shunt biased clipper circuits.

5.12 Draw the double diode clipper or slicer circuit.

5.13 Draw a Zener diode clipper for clipping at any level on both positive and negative half cycles and double clipping and explain the operation of above circuit.

5.14 Draw and explain the diode clamper circuit for a given waveform.

5.15 List the applications of clipper and clamper circuits.

CO-PO/PSO MATRIX

CO No	PO1	PO2	PO3	PO4	PO5	PO6	PO7	PSO1	PSO2	PSO3
BM-302.1	3	2	1					1		
BM-302.2	3	2	1					3		
BM-302.3	3	2	1				1	3		
BM-302.4	3	2						2		
BM-302.5	3							2		
Average	**3**	**2**	**1**				**1**	**2.2**		

3=Strongly mapped **2=Moderately mapped** **1=Slightly mapped**

HYPONATED COURSE CONTENTS:

1. SMALL SIGNAL AMPLIFIERS

Transistor as an amplifier, classification of amplifiers, Analysis of a transistor amplifier circuit using h-parameters. Approximate hybrid model for CC, CE, CB configurations, working of single stage BJT and FET amplifier, working of common base, common collector and Darlington configuration, common source and source follower, RC coupled amplifier (BJT, FET), Direct coupled amplifier.

2. AF POWER AMPLIFIER

Class A single ended, push pull amplifier (Class B), conditions for maximum power output, phase inverter, complementary symmetry amplifier

3. RF TUNED VOLTAGE AND POWER AMPLIFIER

Single tuned, double tuned amplifiers, applications - Tuned class C amplifier, Tank circuit efficiency, neutralization circuits, harmonic generator.

4. FEED BACK AMPLIFIERS:

Basic concepts in feedback, voltage and current feedback effects of feedback, stabilization of gain, reduction of nonlinear distortion, decrease in noise, gain-bandwidth product.

5. WAVE SHAPING CIRCUITS:

Specifications of pulse and pulse waveform, differentiator and integrator circuits.
Clipping circuits using diodes and Zener diodes, clipping at various levels, double clipping. Clamping circuits using diodes.

TEXT BOOKS

1. G.K.Mithal, Electronic Devices and Circuits, 23rd Edition, 2014, Khanna Publishers
2. David A.Bell, Electronic Devices and Circuits, 4th edition PHI, India Publishers
3. T.F. Bogart Jr, J.S.Beasley and G.Rico, Electronic Devices and Circuits, 6th edition, 2004 Pearson Education
4. Albert Malvino and J Bates, Electronic Principles, 7th edition Tata McGraw-Hill Education (TMH) Publishers.
5. V.K. Mehta, Principles of Electronics, 2008, S Chand & Company.
6. David Bell, Fundamentals of Electronic devices and circuits, 5th edition, OUP Canada.
7. Millman & Halkias, Electronic devices & Circuits, 4th edition- TMH
8. N.N. Bhargava, D.C. Kulshreshtha, S.C. Gupta, ; 2nd edition (1 July 2017), McGraw Hill Education

BLUE PRINT:

Sl. No.	Chapter/ Unit Title	No. of Periods	Weightage Allotted	Marks Wise distribution of weightage				Question Wise distribution of weightage				COs mapped
				R	U	Ap	An	R	U	Ap	An	
1	Small Signal Amplifiers	25	14	3	8	3		1	1	1		CO1
2	A.F Power Amplifiers	20	14	3	8	3		1	1	1		CO2
3	R.F Tuned amplifiers	18	14	3	8	3		1	1	1		CO3
4	Feedback amplifiers	12	14	3	8	3		1	1	1		CO4
5	Wave Shaping circuits	15	14	3	8	3		1	1	1		CO5
	HOTs question from chapters 1/2/5		10				10				1	
Total		**90**	**80**	**15**	**40**	**15**	**10**	**5**	**5**	**5**	**1**	

Table specifying the scope of syllabus to be covered for Unit test-I & Unit Test-II

Unit Test	Learning outcomes to be covered
Unit Test-I	From 1.1 to 2.16
Unit Test-II	From 3.1 to 5.15

DBME UNIT TEST-I
MODEL QUESTION PAPER (C-20)
ELECTRONIC CIRCUITS (BM-302)

Time: 90 Minutes Total Marks: 40

PART-A **16 Marks**

Instructions:(1) Answer **all** questions.
(2) First question carries four marks and each of rest carries **three** marks.
(3) Answer for Q.No.2 to 5 should be brief and straight to the point and shall not exceed ***five*** simple sentences.

1.	a. List any two h parameters of CE amplifier. b. LM386 is power amplifier (State True/False). c. State the function of an amplifier. d. What is the basic difference between voltage and power amplifiers?	R	4M	CO1, CO2
2.	Draw the frequency response curve for an RC coupled amplifier	U	3M	CO1
3	List the six factors affecting the bandwidth of transistor amplifier.	R	3M	CO1
4	Classify different power amplifiers using transistors..	U	3M	CO2
5	Draw the basic circuit of class C power amplifier	U	3M	CO2

PART-B **3 x 8 = 24 marks**

Answer either (A) or (B) from each questions from part-B
Each question carries eight marks

6	(A) Draw the circuit of single stage RC coupled amplifier in CE mode and explain the purpose of each component. OR (B) Draw and explain the working of direct coupled amplifier.	U	8M	CO1
7.	(A) Draw &Explain the working of FET common source amplifier with self bias. OR (B) Draw and explain phase splitter circuit.	U	8M	CO2
8.	(A) Draw &Explain the working of complementary push-pull amplifier. OR (B) Derive the expression for output power and efficiency of the class A single ended power amplifier.	U	8M	CO3

BOARD DIPLOMA EXAMINATION, (C-20)
DBME- THIRD SEMESTER EXAMINATION
ELECTRONIC CIRCUITS (BM -302)

Time: 3Hours Total Marks: 80M

PART- A 10×3M=30M

Instructions: (1) Answer all questions

(2) Each question carries three marks

(3) Answers should be brief and straight to the point and shall not exceed five simple sentences.

1	Draw the frequency response curve for an RC coupled amplifier.	U	3M	CO1
2	List the six factors affecting the bandwidth of transistor amplifier.	U	3M	CO1
3	Classify different power amplifiers using transistors.	U	3M	CO2
4	List any six applications of power amplifiers.	Ap	3M	CO2
5	Classify RF voltage amplifiers on the basis of load.	U	3M	CO3
6	Compare merits and demerits of single tuned amplifier.	U	3M	CO3
7	Define feedback factor (β).	R	3M	CO4
8	List six advantages of negative feedback amplifiers.	U	3M	CO4
9	Define the term rise time and fall time.	R	3M	CO5
10	List the applications of clippers and clamper circuit.	Ap	3M	CO5

PART-B **5 x 8 = 40 marks**

Answer either (A) or (B) from each questions from part-B

Each question carries eight marks

11	(A) Draw the circuit of single stage RC coupled amplifier in CE mode and explain the purpose of each component. or (B) Draw and explain the working of direct coupled amplifier.	U	8M	CO1
12	(A) Draw &Explain the working of complementary push-pull amplifier. or (B) Derive the expression for output power and efficiency of the class A single ended power amplifier	U	8M	CO2
13	(A) Draw and explain the working of harmonic generator. Or (B) Explain the need for neutralizing capacitor in RF tuned voltage amplifier.	U	8M	CO3
14	(A) Explain the difference between positive feedback and negative feedback amplifiers. Or (B) Draw and explain different negative feedback amplifiers with block diagram.	U	8M	CO4
15	(A) Draw and explain high pass RC circuit for square wave input voltage. Or (B) Draw & Explain the operation of Zener Diode clipper circuit on both positive and negative half cycles.	U	8M	CO5

PART- C **1×10M=10M**

Instructions: (1) Answer the following question

(2) The question carries ten marks.

(3) Answers should be comprehensive and the criterion for valuation is the content but not the length of the answer.

16	For the circuit with ideal diodes shown in the figure what will be the shape of output voltage (V_{out}) for a given sine wave input (V_{in}). Justify your answer. 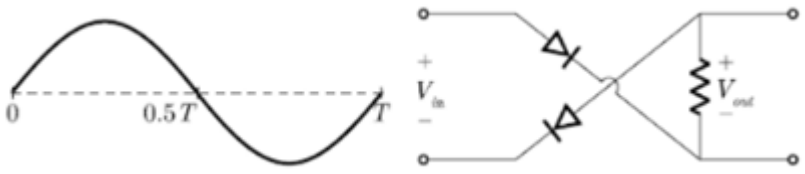	An	10M	CO1

NETWORK ANALYSIS

Course Code	Course title	No of periods/week	Total no. of periods	Marks for FA	Marks for SA
BM-303	NETWORK ANLYSIS	6	90	20	80

SI.NO.	Unit title	No. of Periods	COs Mapped
1	Resonance	15	CO1
2	Network analysis & Theorems	20	CO2
3	Coupled Circuits	10	CO3
4	Networks	30	CO4
5	Transmission Lines	15	CO5
	TOTAL	**90**	

Course Objectives	1. To explain the resonance phenomenon.
	2. To analyse electrical/coupled networks using mesh, node analysis, network theorems
	3. To understand electrical parameters of networks and filter circuits.
	4. To understand the concept of transmission lines and its parameters

CO No		Course Outcome
CO1	**BM-303.1**	Construct resonance circuits and to determine different parameters.
CO2	**BM-303.2**	Analyse networks by mesh &nodal analysis and verify different network theorems.
CO3	**BM-303.3**	Analyse coupling circuits
CO4	**BM-303.4**	Explain different filters and attenuators.
CO5	**BM-303.5**	Explain the concept of transmission lines

Learning Outcomes

Understand the resonance in A.C. Circuits.

1.1 Define resonance in RLC A.C. Circuits.
1.2 Derive the expression for resonant frequency, impedance and current at resonance of RLC series circuits.
1.3 Explain series resonance with the help of reactance curves.
1.4 Determine the bandwidth from the frequency response characteristics.
1.5 Explain how the series resonance acts as a voltage magnifying circuit.
1.6 Explain the effect of resistance on selectivity and Band Width.
1.7 Define the qualify factor of coils and capacitor.`
1.8 Calculate 'Q' from Band Width and resonant frequency.
1.9 Derive an expression for impedance of parallel circuit at anti-resonant frequency.
1.10 Derive an expression for anti-resonance frequency.
1.11 Explain anti – resonance-using susceptance curves**.**
1.12 Explain how the anti – resonant circuit acts as a current magnifier / rejector circuit.
1.13 List the application of resonant circuit.
1.14 Solve simple problems on series and parallel resonance circuits.
1.15 Compare the performance characteristics of series and parallel resonance circuits.

Analyze the networks by network analysis methods and network theorems

2.1 Explain ideal voltage source and ideal current source
2.2 List the two methods of network analysis based on Kirchhoff's laws.
2.3 Explain the method of selecting mesh currents and find the number of mesh currents required for analysing a network.
2.4 Analyze the networks by writing mesh current equations in matrix form.
2.5 Solve mesh current equations using Crammer's rule
2.6 Define the driving point impedance and transfer impedance of a network
2.7 Select the principal nodes in node voltage network.
2.8 Analyze the networks by writing node voltage equations in matrix form.
2.9 Define driving point admittance, transfer admittances of a network.
2.10 Explain the principal of Duality
2.11 Draw the dual of a given network.
2.12 Define Thevenin's, Norton's, Super position and maximum power transfer Theorem and Apply the above theorems in solving problems.

Analyze the coupled circuits.

3.1 Classify the types of inductively coupled circuits
3.2 Explain dot rules for coupled circuits
3.3 Apply dot rules for analysis of coupled circuits
3.4 Explain the phenomenon of reflected coupledimpedance.
3.5 Explain the phenomenon of coupled impedance in single tuned circuits.
3.6 Define the critical coupling, loose coupling and tight coupling.
3.7 Explain the reasons for double humps in tight coupled circuits.
3.8 List applications of tuned circuits.

Categorize the four terminal passive networks.

4.1 Distinguish between symmetrical and non-symmetrical networks.
4.2 Define a) characteristic impedance and propagation constant of symmetrical network.
b) Image and iterative impedances of asymmetrical network
4.3 Derive an expression for $Z_o$of symmetrical T network and mention the $Z_o$expressions for symmetrical π network.
4.4 Show that $Z_o = \sqrt{Z_{oc}Z_{sc}}$.
4.5Define a) Decibel and neper and list the relationship
b)Pass band and attenuation band of filters
4.6Classify filters depending on function and type ;Draw frequency versus attenuation curves for LPF,HPF, BPF, and BSF.
4.7Explain the working of constant K, LPF and HPF (T& π types) and draw frequency versus attenuation, Z_o and phase shift characteristics.
4.8 Derive the expressions for designing of LPF and HPF (T type) and mention the design expressions for π type ; solve problems on designing LPF and HPF (T & π types) for a given cut off frequency and R_o value.
4.9 State disadvantages of constant K filters and list the advantages of m- derived filters.
4.10 Obtain m- derived T & π type sections from constant K-Filters.
4.11 Analyze the characteristic curves of M derived LPF and HPF sections.
4.12 Draw the block diagram of composite filter.
4.13 Distinguish between attenuators and filters.
4.14 simple configurations of T &π type attenuators and mention the expressions for attenuation.
4.15 Functionofan equalizer and Classify the equalizers.
4.16 Draw the simple equalizer circuit and explain

Understand different aspects of transmission lines

5.1 Distinguish between lumped and distributed parameters.
5.2 Define the primary and secondary constants of transmission line.
5.3 Relate primary and secondary constants.
5.4 Express transmission line as a symmetrical T network.
5.5 Define an infinite line.

5.6 Derive an expression for $Z_o$and propagation constant of a transmission line.
5.7 Define phase velocity and group velocity and list the relationship between them.
5.8 List different wave form distortions in L F lines and mention the reason.
5.9 Derive the condition for distortion less transmission line (LF).
5.10 Explain loading.
5.11 Define reflection coefficient.
5.12 Explain the term standing wave.
5.13 Define SWR.
5.14 Relate SWR and reflection coefficient.

CO-PO/PSO MATRIX

CO No	PO1	PO2	PO3	PO4	PO5	PO6	PO7	PSO1	PSO2	PSO3
BM-303.1	3	1	1					2		
BM-303.2	3	2	1					2		
BM-303.3	2	2	2					2		
BM-303.4	2	2	2	1				3		
BM-303.5	2			1			1	1		
Average	2.4	1.75	1.5	1			1	2		

3=Strongly mapped 2=Moderately mapped 1=Slightly mapped

HYPONATED COURSE CONTENTS

1 RESONANACE

Series and parallel resonance conditions for resonance, Q factor, effect of resistance on Q, Selectivity and band width, uses of resonant circuits.

2 NETWORK ANALYSIS AND THEOREMS

Mesh current analysis, solving Mesh equations, Driving point impedance, transfer impedance, Node voltage analysis, equations and solutions- Driving point admittance, transfer admittance and duality. Superposition theorem, Maximum power transfer theorem, Thevenin's and Norton's theorems.

3. COUPLED CIRCUITS

Types of Coupled circuits, coupled circuits dot convention; Reflected impendence and single tuned coupled circuits.

4. NETWORKS

Four terminal networks, T and Π, symmetrical and Asymmetrical networks, open circuit impedance, short circuit impedance; characteristic impedance, propagation constant, compare T and Π networks. The decibel and Neper, simple configuration of different types of filters, LPF, HPF, BPF their attenuation and phase characteristics, m derived filters, composite filter, attenuators, equalizers.

5. TRANSMISSION LINES

Line parameters, primary and secondary constants, infinite line, wave form distortion, distortion less condition, loading, reflection coefficient. Standing waves, Standing wave ratio.

REFERENCE BOOKS

1. Hayt&Kemerly, Engineering Circuit analysis, 8th edition, McGraw Hill Publishers
2. Van Valkenberg, Network analysis, PHI
3. Sudhakar&Shyam Mohan, Circuits and Networks,TMH
4. Joseph Adminster, Network Theory- Schaum Series, McGraw Hill Publishers
5. D Roy Choudhury, Networks and Systems, Wiely Eastern Limited.
6. UmeshSinha,Transmission Lines And Networks,1 January 2010, SATYA PRAKASH

MODEL BLUE PRINT

Sl. No.	**MajorTopics**	**No. of periods**	**Weightage of marks**	**Marks wise Distribution of Weightage**				**Question wise Distribution of Weightage**				**Cos Mapped**
				R	**U**	**Ap**	**An**	**R**	**U**	**Ap**	**An**	
1	Resonance	15	14	3	8	3		1	1	1		CO1
2	Network analysis & Theorems	20	14	3	3		8	1	1		1	CO2
3	Coupled Circuits	10	11	3	8			1	1			CO3
4	Networks	30	17	6	3		8	2	1		1	CO4
5	Transmission Line	15	14	3	11			1	2			CO5
	HOTs question from chapter 2/3/4		10				10				1	
	Total	**90**	**80**	**18**	**33**	**3**	**26**	**6**	**6**	**1**	**3**	

Table specifying the scope of syllabus to be covered for Unit test-I & Unit Test-II

Unit Test	**Learning outcomes to be covered**
Unit Test-I	From 1.1 to 3.8
Unit Test-II	From 4.1 to 5.14

DBME UNIT TEST-I
MODEL QUESTION PAPER (C-20)
NETWORK ANALYSIS (BM-303)

Time: 90 Minutes Total Marks: 40

PART-A **16 Marks**

***Instructions*:** (1) Answer **all** questions.

(2) First question carries four marks and each of rest carries **three** marks.

(3) Answer for Q.No.2 to 5 should be brief and straight to the point and shall not exceed ***five*** simple sentences.

1.	a. List any two applications of resonant circuit. b. Superposition theorem can be applied to non- linear circuits (State True/False). c. State KVL. d. List any two applications of tuned circuits.	R	4M	CO1, CO2, CO3
2.	Define series resonance & write the expression for resonance frequency	U	3M	CO1
3	State Thevenin's theorem.	R	3M	CO2
4	Classify inductively coupled circuits.	U	3M	CO3
5	Define driving point admittance & driving point impedance of a network.	R	3M	CO2

PART-B **3 x 8 = 24 marks**

Answer either (A) or (B) from each questions from part-B

Each question carries eight marks

6	(A) Distinguish between series and parallel resonance. OR (B) Derive expression for Q_o in terms of bandwidth and resonance frequency.	An	8M	CO1
7.	(A) Define and derive expression for characteristic impedance of symmetric network. OR (B) Define Thevenin's theorem and Thevenin's equivalent circuit for the given network across the terminals AB. 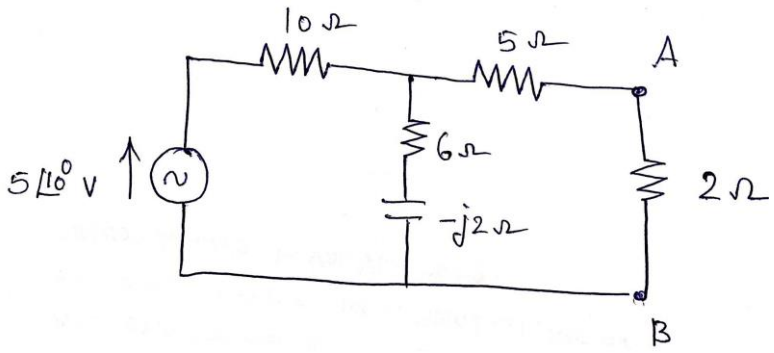	An	8M	CO2
8.	(A) State the dot rules for a coupled circuit and derive the expression for reflected impedance of a coupled circuit. OR (B) Classify the coupled circuits based on degree of coupling and Explain the reasons for double humps in tightly coupled circuits.	U	8M	CO3

BOARD DIPLOMA EXAMINATION, (C-20)
DBME- THIRD SEMESTER EXAMINATION
NETWORK ANALYSIS (BM-303)

Time: 3Hours Total Marks: 80M

PART- A 10×3M=30M

Instructions: (1) Answer all questions
(2) Each question carries three marks
(3) Answers should be brief and straight to the point and shall not exceed five simple sentences.

1.	Define series resonance & write the expression for resonance frequency.	R	3M	CO1
2.	List the applications of resonance circuit.	U	3M	CO1
3	State Norton's theorem.	R	3M	CO2
4	Define driving point admittance & driving point impedance of a network.	R	3M	CO2
5	Classify inductively coupled circuits.	U	3M	CO3
6	Define Symmetrical & Asymmetrical networks.	R	3M	CO4
7	Draw attenuation characteristics for BPF & BSF.	U	3M	CO4
8	What are the disadvantages of constant – K filter.	U	3M	CO4
9	Distinguish between lumped and distributed parameters.	U	3M	CO5
10	Define reflection coefficient & SWR.	R	3M	CO5

PART-B 5 x 8 = 40 marks

Answer either (A) or (B) from each questions from part-B
Each question carries eight marks

11	(A) Distinguish between series and parallel resonance. Or (B) Derive expression for Q_o in terms of bandwidth and resonance frequency.	U	8M	CO1
12	(A)Explain how to analyse a network by writing mesh current equations in matrix form. or (B) Define Thevenin's theorem and Thevenin's equivalent circuit for the given network across the terminals AB.	An	8M	CO2

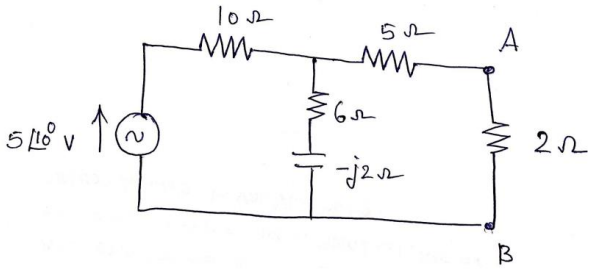

13 (A)State the dot rules for a coupled circuit and derive the expression for reflected impedance of a coupled circuit.

Or

(B) Classify the coupled circuits based on degree of coupling and explain the reasons for double humps in tightly coupled circuits. U 8M CO3

14 (A)Design an m-derived T –type LPF with design impedance of 600 Ω, cut-off frequency 5KH$_z$ and m= 0.5. An 8M CO4

Or

(B) Derive the expressions for designing of T – type HPF.

15 (A)Derive an expression for Z_o& propagation constant of a transmission line.

Or

(B) List different wave form distortions in LF lines and derive the condition for distortion less transmission line. An 8M CO5

PART- C 1×10M=10M

Instructions: (1) Answer the following question

(2) The question carries ten marks.

(3) Answers should be comprehensive and the criterion for valuation is the content but not the length of the answer.

16 Can we apply superposition theorem to analyse the given network to find current in 6Ω resistor. If not apply any other suitable theorem and find current in 6Ω resistor.

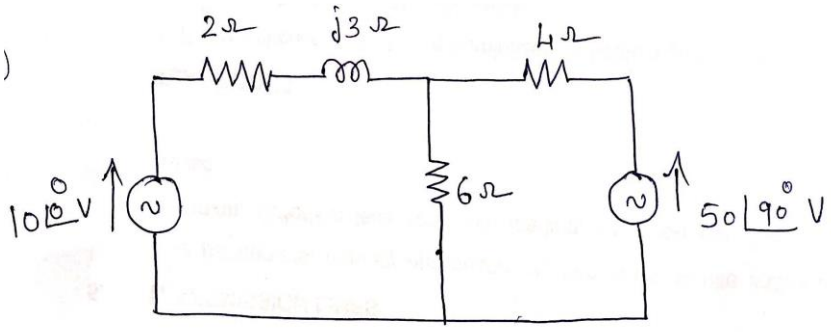

An 10M CO2

DIGITAL ELECTRONICS

Course code	Course title	No of periods/week	Total no. of periods	Marks for FA	Marks for SA
BM-304	DIGITAL ELECTRONICS	6	90	20	80

S.NO.	Unit Title	No. of Periods	COs Mapped
1	Number Systems, Logic Gates and Logic families	20	CO1
2	Arithmetic and Combinational logic Circuits	20	CO2
3	Flip – flops	15	CO3
4	Counters and Registers	15	CO4
5	Displays and Semiconductor Memories	20	CO5
	TOTAL	**90**	

Course Objectives	1. To familiarize with various number systems, postulates of boolean algebra, logic gates and logic circuits.
	2. To analyze the working of logic gates, combinational and sequential circuits and memories.
	3. To learn the practical importance and applications of digital electronic circuits.
	4. Acquaint with the working of displays and semiconductor memories.

CO No	Course Outcome

CO1	**BM-304.1**	Convert a number from one system to another system, simplify logic expressions and understand logic families
CO2	**BM-304.2**	Analyse, design and implement combinational logic circuits
CO3	**BM-304.3**	Analyse, design and implement sequential logic circuits
CO4	**BM-304.4**	Analyse and design the registers and counters
CO5	**BM-304.5**	Describe different semiconductor memories

Learning Outcomes

1.0 Comprehend Number systems, Boolean algebra, different logic gates and logic families.

1.1 Review of Number Systems – Positional Number systems, Signed, 1's & 2's Complement Number systems, Binary algebra, BCD code, Grey code, Excess 3 code.

1.2 State the different postulates in Boolean algebra.

1.3 Explain the working of AND, OR ,NOT,NAND, NOR gates and Exclusive OR gate with truth tables.

1.4 State De-Morgan's Theorem. And apply De-Morgan's theorem and other postulates of Boolean algebra to simplify the given Boolean expression.

1.5 Write a)Boolean expressions for the given problem.

b)Boolean expressions from a given truth table.

1.6 Use Karnaugh map to simplify Boolean Expressions with and without don't care conditions.

1.7 Explain the concept of sum of products and product of sums.

1.8 Develop AND,OR, NOT & exclusive NOR gates using NAND gates only and NOR Gates only.

1.9 Define positive and negative logic.

1.10 List the TTL, CMOS, and ECIL families characteristics such as logic levels, propagation delay, noise margin, fan in & fan out and power dissipation.

1.11 Draw an open collector TTL NAND gate and explain its working.

1.12 State the use of pull up resistor.

1.13 Draw and explain a) TTL NAND gate with totem pole output.

b) ECL gate circuit for NOR gate.

c) CMOS NAND gate circuit

1.14 State the need for a tri-state buffer/NOT gate.

1.15 Draw the simplified diagram of a tri-state buffer/NOT gate and explain its operation.

1.16 Compare the performance of TTL gate with that of CMOS gate.

2.0 Comprehend the working of arithmetic circuits and combinational logic circuit

2.1 State the function of Half-adder

2.2 Draw Half-adder using an exclusive OR and an AND gate

2.3 Show the two Half-adders and an OR gate of constitute full adder

2.4 Realize the half-adder using only NAND gates or only NOR gates

2.5 Draw and explain 4-bit parallel adder using full adders

2.6 Draw and explain 4-bit parallel adder and 2's complement substractor circuit

2.7Explain the working of a serial adder with a block diagram
2.8Compare the serial adder and parallel adder
2.9Explain the operation of a digital comparator circuit for a two 3-bit words
2.10 Design a) 4 to 2-line priority encoder
b) 4 to 16-line decoder
2.11 List the applications of a multiplexers and de-multiplexers.
2.12 List the few common TTL/CMOS encoders, decoders, multiplexers and de-multiplexers
2.13 Design various combinational circuits using multiplexers and de- multiplexers
2.14 Construct full adder using a) (3X8) decoders
b) Two (4X1) multiplexers
2.15 Problems on Boolean function implementation using basic gates,universal gates, decoders, multiplexers.

3.0 Comprehend the working of different types of flip - flops

3.1 State the basic of operation of flip-flops
3.2 Explain the working of a NAND/NOR gate latch
3.3 Explain the symbol, characteristic equations, truth tables, excitation tables & the working of RS, T, D & JK flip-flops
3.4 Discuss the concepts of edge and level triggering in flip - flops
3.5 State the need of a master slave flip-flop
3.6 Explain the working of a JK master slave flip-flop using suitable diagram and truth table
3.7 List the common TTL/CMOS flip-flop ICs.
3.8 Convert one flip-flop to another.

4.0 Comprehend the functions of registers and counters and their working

4.1 State the need for a register and explain transfer of data between registers
4.2 Explain the working of i) serial in-serial out, serial in parallel out registers
ii)shift left, shift right registers
iii) IC74192 universal shift registers.
4.3 State the use of shift registers as memory
4.4 Distinguish between asynchronous and synchronous counters
4.5 Design the circuit of a modulus-8 ripple counter and explain the counting sequence with waveforms and truth table.
4.6 Design the circuit of a decade counter and explain the counting sequence with waveforms and with truth tables.
4.7 List the TTL counter ICs.
4.8 Draw the circuit diagram of a decade counter using 7490 and 7493.
4.9 Explain the drawback of ripple counters.
4.10 Design of a 4-bit synchronous counter and explain its operation.
4.11 Explain the operation of an up/down counter with circuit
4.12 Draw the 4-bit ring counter circuitand explain its operation.
4.13 State the applications of counters.

5.0 Understand working of display devices and Semiconductor memories.

5.1 State the use of display circuits using LEDs and LCDs.
5.2 Explain the working principles of LEDs and LCDs
5.3 Draw the BCD to 7-segment display decoder converting circuit and explain the operation.
5.4 State the concept of touch screen displays (resistive, capacitive, optical)
5.5 State the advantages and disadvantages of i) LED display.
ii)LCD display

5.6 List the types of memories.
5.7 Define terms Read, Write, Access time, Capacity, Word length and Address of a memory
5.8 Types of memories: Volatile and Non-volatile memories, Static and Dynamic memories, Random access memories, Sequential access memories, read only memories and read/write Memories.
5.9 Explain the working of i) a basic bipolar RAM – cell.
ii) a basic dynamic CMOS RAM cell.
5.10 List common TTL/CMOS (static & Dynamic) RAM IC numbers.
5.11 State the advantages and disadvantages of dynamic RAM over static RAM's.
5.12 State the use of PROM.
5.13 Distinguish between UV EPROM and EPROM.
5.14 List UV EPROM and EPROM IC numbers.

CO-PO/PSO MATRIX

CO No	PO1	PO2	PO3	PO4	PO5	PO6	PO7	PSO1	PSO2	PSO3
BM-304.1	3	2						1		
BM-304.2	3	2						2		
BM-304.3	3		1	1				2		
BM-304.4		2	2					3		
BM-304.5	3		2	1			1	2		
Average	**3**	**2**	**1**	**1**			**1**	**2**		

3=Strongly mapped **2=Moderately mapped** **1=Slightly mapped**

HYPONATED COURSE CONTENTS:

1. Number systems, Logic Gates and Logic families

Number systems, positive & negative number representations, encoding concepts. AND. OR, NOT, NAND & Exclusive OR, logical definitions, symbols. Boolean expressions using truth tables; simplification of Boolean expressions using De -Morgan's theorems and Boolean algebra, universal gates - formulating and Implementation of logic expressions; Karnaugh map applications involving development of combinational logic circuits. Positive & Negative logic inputs, TTL logic, open-collector and totem pole output &tristate logic gates, 74 & 54 series of ICs – Propagation delay or speed, noise margin, logic levels, power dissipation, fan - in / fan - out. CMOS circuits and comparison with TTL circuits; basic concepts of ECL (Emitter Coupled Logic).

2. Arithmetic and Combinational Logic Circuits:

Implementation of arithmetic circuits of half adder, full adder, serial/parallel binary adders and subtractor circuits, digital comparator, encoders, decoders, multiplexers and de-multiplexers applications.

3. Flip - Flops:

Flip-flops operating principle (with the help of waveform and truth table) RS, D, JK, T and Master slave JK flip-flop. Concept of edge triggering and levels triggering.Synchronous, asynchronous inputs and CMOS flip-flop ICs.

4. Counters and Registers:

Basic asynchronous binary and decade counters and their use. Divide by N-counter: programmable counters, up and down counters, ring counters and their use. Counter design, Shift registers, serial in, serial out, serial in parallel out, parallel in parallel out, parallel in serial out and universal shift registers and applications.

5. Displays and Semiconductor Memories:

Construction, working and operating principles of LED, LCD, seven segment displays, dot matrix and alphanumeric display, touchscreen display, decoding driver circuits for seven segmentdisplays.Concept of memory using registers; working principle of ROM, PROM, EPROM and EEPROM.Static and Dynamic RAMs and PLAs, expansion of memorie capacity and word size.

REFERENCE BOOKS:

1. Malvino and Leach, Digital Computer Electronics, 3rd edition Tata McGraw-HillEdition
2. RP JAIN , Modern Digital Electronics, 3rd editionTMH
3. Roger L. Tokheim , Digital Electronics: Principles & Application, McGraw-Hill Edition,2008
4. GK Kharate , Digital Electronics, Oxford UniversityPress.
5. V.K.Puri, Digital Electronics, TataMcGraw-Hill.
6. Morris Mano, Digital Design, 3rd edition,Pearson,
7. Thomas C. Bartee,Digital Computer Fundamentals, 6th edition ,McGraw-Hill Inc,US

MODEL BLUE PRINT

Sl. No.	Unit Title	No. of periods	Weightage of marks	Marks wise Distribution of Weightage				Question wise Distribution of Weightage				COs Mapped
				R	U	Ap	An	R	U	Ap	An	
1	Number Systems, Logic Gates Logic families	20	14	6	8			2	1			CO1
2	Arithmetic and Combinational logic Circuits	20	17	3	6	8		1	2	1		CO2
3	Flip – flops	15	11	3	8			1	1			CO3
4	Counters and Registers	15	11	3		8		1		1		CO4
5	Displays and Semiconductor Memories	20	17	6	8	3		2	1	1		CO5
	HOTs question from chapters 2/3/4		10				10				1	CO1 CO2
	Total	**90**	**80**	**21**	**30**	**19**	**10**	**7**	**5**	**3**	**1**	

Table specifying the scope of syllabus to be covered for Unit test-I & Unit Test-II

Unit Test	Learning outcomes to be covered

Unit Test-I	From 1.1 to 3.2
Unit Test-II	From 3.3 to 5.14

DBME UNIT TEST-I
MODEL QUESTION PAPER (C-20)
DIGITAL ELECTRONICS (BM-304)

Time: 90 Minutes Total Marks: 40

PART-A **16 Marks**

Instructions: (1) Answer **all** questions.
(2) First question carries four marks and each of rest carries **three** marks.
(3) Answer for Q.No.2 to 5 should be brief and straight to the point and shall not exceed ***five*** simple sentences.

1.	a. Decimal equivalent for $(10101)_2$. b. Write the truth table of EX-OR gate. c. Expression for carry of full adder…….. d. List any two applications of multiplexer.	U	4M	CO1, CO2
2.	Define positive and negative logic families.	R	3M	CO1
3	Draw half adder circuit with truth table.	U	3M	CO2
4	List the applications of decoder.	R	3M	CO2
5	State basic operation of flip- flop.	R	3M	CO3

PART-B **3 x 8 = 24 marks**

Answer either (A) or (B) from each questions from part-B
Each question carries eight marks

6	(A) Simplify the Boolean function F (A, B, C, D) =π (3,5,7,8,10,11,12,13) using K-map. OR (B) Simplify the Boolean function F (A, B, C, D) = Σ(3,5,7,8,10,11,12,13) using K-map	An	8M	CO1
7.	(A) Explain 3-bit magnitude comparator.	U	8M	CO2

		or			
	(B) Explain the full adder using (3X8) decoders				
8.	(A) Draw & explain the working of TTL NAND gate. OR (B) Draw and explain NAND latch.	U	8M	CO1, CO3

BOARD DIPLOMA EXAMINATION, (C-20)
DBME- THIRD SEMESTER EXAMINATION
DIGITAL ELECTRONICS (BM-304)

Time: 3Hours Total Marks: 80M

PART- A **10×3M=30M**

Instructions: (1) Answer all questions

(2) Each question carries three marks

(3) Answers should be brief and straight to the point and shall not exceed five simple sentences.

1.	Define positive and negative logic families.	R	3M	CO1
2.	Convert $(1258)_{10}$ into Hexa decimal number.	U	3M	CO1
3	Draw half adder circuit with truth table.	U	3M	CO2
4	Compare parallel adder with serial adder.	U	3M	CO2
5	List the applications of decoder.	U	3M	CO2
6	Define race around condition.	R	3M	CO3
7	State the need of shift registers.	U	3M	CO4
8	List the limitations of ripple counters.	U	3M	CO4
9	Write the advantages of LCDs.	R	3M	CO5
10	List the EPROM and UVPROM IC numbers.	R	3M	CO5

PART-B **5 x 8 = 40 marks**

Answer either (A) or (B) from each questions from part-B

Each question carries eight marks

11	(A) Simplify the Boolean function F (A, B, C, D) =π (3,5,7,8,10,11,12,13) using K-map. or (B) Simplify the Boolean function F (A, B, C, D) = Σ(3,5,7,8,10,11,12,13) using K-map	An	8M	CO1
12	(A) Explain 3-bit magnitude comparator. or (B) Explain the full adder using (3X8) decoders.	U	8M	CO2
13	(A) Draw and explain the clocked SR flip-flop Or (B) Explain the Master slave JK flip-flop.	U	8M	CO3
14	(A) Explain the Universal shift register using 74194 IC. Or (B) Explain the 4-bit ring counter with timing diagram.	Ap	8M	CO4
15	(A) Explain the working principle of LEDs. Or (B) Explain the working of a basic bipolar RAM – cell	U	8M	CO5

PART- C1×10M=10M

Instructions: (1) Answer the following question

(2) The question carries ten marks.

(3) Answers should be comprehensive and the criterion for valuation is the content but not the length of the answer.

16	Apply the design concept of 4-bit synchronous counter to develop an 8	An	10M	CO4

bit counter.

PROGRAMMING IN C& MATLAB

Course Code	Course title	No of periods/week	Total no. of periods	Marks for FA	Marks for SA
BM-305	PROGRAMMING IN C & MATLAB	6	90	20	80

S No	Unit Title	No. of Periods	COs Mapped
1	C Programming Basics	15	CO1
2	Conditional statements and arrays	20	CO2
3	Strings, Functions & Pointers	20	CO3
4	Structures &unions	15	CO4
5	Basics of MATLAB	20	CO5
	Total	**90**	

Course Objectives	1. To familiarize with programming in C language and MATLAB
	2. To understand the programming in C language and MATLAB
	3. To learn the practical importance and applications of programming in C language and MATLAB

CO No		Course Outcome
CO1	**BM-305.1**	Describe the basics of C Programming.
CO2	**BM-305.2**	Explain conditional statements and Arrays of C Programming
CO3	**BM-305.3**	Analyse the concepts of strings, functions and pointers in C programming.
CO4	**BM-305.4**	Describe the structures and unions in C-Programming.
CO5	**BM-305.5**	Describe the basics of MATLAB

LEARNING OUTCOMES

1.0 C Programming Basics

1.1 Explain the structure of C language

1.2 State the function of pre-processor directives and list pre-processor directives.

1.3 Explain the pre-processor directives: #define, #include with examples

1.4 List the steps involved in executing the C program

1.5 Mention the character set of C language.

1.6 Define i) Keywords and list them

ii) Term Identifier in C

1.7 List the data types used in C and explain them with examples.

1.8 Explain constants and variables.

1.9 State the declaration of variables.

1.10 List the five Arithmetic Operators and give their precedence.

1.11 State the assignment statement.

1.12 List the shorthand assignment operators and explain with examples.

1.13 Define an expression and show how to evaluate an Arithmetic Expression.

1.14 Explain the increment and decrement operators.

1.15 List i) relational operators used in C.

ii)logical operators supported by 'C'

1.16 Give the operator precedence.

1.17 Explain evaluating a logical expression.

1.18 List the bitwise logical operators and explain them.

1.19 Explain printf () and scanf () functions with examples.

2.0 Conditional Statements & Arrays

2.1 State the importance of decision making statements in programming

2.2 List decision making statements

2.3 Write the syntaxes of the following decision making statements and explain

i. If
ii. If..else.
iii. Nested if …else
iv. If… else ladder ..

2.4 Write the syntax of switch statement and explain.

2.5 Explain conditional operator.

2.6 Write simple programs using decision making statements.

2.7 Define a loop in C and list loop/iterative statements

2.8 Write the syntaxes of the following loop control statements and explain

i. for
ii. while
iii. do… while

2.9 Define nested loops.

2.10 Compare i) while and do .. while loop statements

ii)for and do .. while loop statements

2.11 Write a program i) To display first n natural numbers using loops.

ii) To find sum of given numbers using loops.

iii) To print fibonacci series using loops.

2.12 Differentiate between break and continue statements.

2.13 Define an Array and explain declaration and initialization of One Dimensional Array.

2.14 Explain accessing the elements in the Array.

2.15 Write a C program i) To find largest / smallest number in an array

ii) To sort the numbers in an array.

2.16 Explain declaration and initialization of two Dimensional Arrays.

2.17 Write a C program to perform matrix addition/subtraction.

3.0 Strings, Functions & Pointers

3.1 Define String

3.2 State the declaration and initialization of String variables.

3.3 Explain different functions used for reading and writing strings.

3.4 Explain the String handling functions strcat(),strcmp(),strcpy() and strlen() with examples.

3.5 Write a C program i) To check whether the given string is palindrome or not.

ii) To reverse the given string.

3.6 State the use of function in C

3.7 Explain declaration of a function in program

3.8 Define i) function prototype

ii) a function call

3.9 State the use of return statement.

3.10 Explain passing of parameters to the function
3.11 Write programs using function call technique
3.12 Define a pointer.
3.13 Declare a pointer, assign a pointer, initialize a pointer
3.14 Differentiate address and dereferencing operators.

4.0 Structures and unions

4.1 Define a structure in C
4.2 Describe structure variable.
4.3 Explain initialization of structures.
4.4 Explain the method of accessing of members of a structure.
4.5 Illustrate structures with a program to read & print a book database consisting of Title of book, author, no. of pages, price as fields
4.6 Define a Union
4.7 Differentiate between structure and union

5.0 MATLAB Basics

5.1 State the need for MATLAB in solving engineering problems
5.2 List the major differences between C and MATLAB
5.3 Give the significance of MATLAB over other high level languages
5.4 List the arithmetic operators, relational operators, logical operators and special operators in MATLAB
5.5 List the data types in MATLAB
5.6 Give the syntax and usage of decision making statements :
i) if…end statement; ii) if..else..end statement used in MATLAB
5.7 Give the syntax and usage of loop statements :i) while loop ii) for loop used in MATLAB
5.8 Explain the creation 1D & 2D arrays and mXn matrices in MATLAB
5.9 Illustrate with an example the matrix operations such as :i) addition ;ii) subtraction; iii) multiplication; iv) transpose and v) inverse using MATLAB
5.10 List the common input/output functions in MATLAB.
5.11 Illustrate plot commands such as: i) plot(x,y) ; ii) fplot() iii) title(); iv) xlabel(); v) ylabel(); vi) legend() in MATLAB
5.12 State the usage of :
i) Communication system tool box
ii) Control system tool box

iii) Signal processing tool box

iv) SIMULINK

CO-PO/PSO MATRIX

CO No	PO1	PO2	PO3	PO4	PO5	PO6	PO7	PSO1	PSO2	PSO3
BM-305.1	3							1		
BM-305.2	3	2	2					2		
BM-305.3		2		1				3		
BM-305.4	3	2	2					3		
BM-305.5	3			1			1	2		
Average	**3**	**2**	**2**	**1**			**1**			

3=Strongly mapped 2=Moderately mapped 1=Slightly mapped

HYPONATED COURSE CONTENTS:

1. C-Programming Basics

Structure of a C program, pre-processor directives- Character Set, Constants, Variables, Data types, Arithmetic, Logical, Relational operators and precedence – Assignment, Increment, Decrement operators, evaluation of expressions- printf() and scanf() functions.

2. Decision and Loop control Statements and arrays

If, If-else, Nested If else, Break, Continue, Switch statements Loops: - For, While, Do-while, Nesting of Loops.1D Array declaration, Initialization, 2D Array declaration, Initialization, Accessing of Array elements

3. Strings and Functions and pointers in C

Initialization of Strings- Display of strings with format-Function-Definition, Declaration, Return statement, passing parameters to function- Function calls, Pointer declaration- address and dereferencing operators.

4. Structures and Unions

Structure features, Declaration and Initialization, Accessing of Structure members- Unions.

5. Matlab Basics

Matlab elements –data types – operators-relational, logical -decision making statements – loop statements –arrays and matrices -working with matrices –input/output functions – plotting commands- uses

REFERENCE BOOKS

1. BalaguruSwamy.E, Programming in ANSI C, , 3rd Edition, TMH
2. Kamthane, Programming with ANSI and Turbo C, Pearson Education
3. Gottfried (Schaum Series), Programming in C, McGraw Hill
4. ReemaThareja, Programming in C, Oxford university press.

BLUE PRINT:

Sl. No.	Unit Title	No. of Periods	Weightage Allotted	Marks Wise distribution of weightage				Question Wise distribution of weightage				COs mapped
				R	U	Ap	An	R	U	Ap	An	
1	C Programming Basics	15	11	3	8		-	1	1	-	-	CO1
2	Conditional statements and arrays	20	17	3	6	8	-	1	2	1	-	CO2
3	Strings, Functions & Pointers	20	14	3	3	8		1	1	1		CO3
4	Structures & unions	15	14	3	3	8	-	1	1	1	-	CO4
5	Basics of MATLAB	20	14	3	3	8	-	1	1	1	-	CO5
HOTs question from chapters 2/3/5			10				10				1	
Total		**90**	**80**	**15**	**23**	**32**	**10**	**5**	**6**	**4**	**1**	

Table specifying the scope of syllabus to be covered for Unit test-I & Unit Test-II

Unit Test	Learning outcomes to be covered
Unit Test-I	From 1.1 to 3.5
Unit Test-II	From 3.6 to 5.12

DBME UNIT TEST-I
MODEL QUESTION PAPER (C-20)
PROGRAMMING IN C & MATLAB (BM-305)

Time: 90 Minutes Total Marks: 40

PART-A 16 Marks

Instructions: (1) Answer **all** questions.
(2) First question carries four marks and each of rest carries **three** marks.
(3) Answer for Q.No.2 to 5 should be brief and straight to the point and shall not exceed ***five*** simple sentences.

1.	a. List any two bitwise logical operators. b. Write any two decision making statements. c. Write syntax of switch statement. d. Mention any two arithmetic operators.	R	4M	CO1, CO2
2.	Define increment and decrement operators.	R	3M	CO1
3	Compare while and do-while loop.	U	3M	CO1
4	State the use of return statement.	U	3M	CO2
5	Define string.	R	3M	CO2

PART-B 3 x 8 = 24 marks

Answer either (A) or (B) from each questions from part-B
Each question carries eight marks

6	(A) Write and explain the syntax of while loop and write a program to display first n natural numbers using while loop. OR (B) Write a C program to perform matrix addition.	An	8M	CO2

7.	(A) Explain syntax and usage of decision making statement if--- end statement in MAT Lab. OR (B) Explain the creation of mxn matrix in MAT Lab.	U	8M	CO2
8.	(A) Explain string handling functions strcat( ), strcmp( ), strcpy( ), strlen( ) with examples. OR (B) Explain constants and variables.	U	8M	CO3, CO1

C-20-BM -305

BOARD DIPLOMA EXAMINATION, (C-20)
DBME- THIRD SEMESTER EXAMINATION
PROGRAMMING IN C & MATLAB

Time: 3Hours Total Marks: 80M

PART- A10×3M=30M

Instructions: (1) Answer all questions
(2) Each question carries three marks
(3) Answers should be brief and straight to the point and shall not exceed five simple sentences.

1.	List the Pre processor directives.	R	3M	CO1
2.	Differentiate between break & continue statement.	R	3M	CO1
3	Compare while and do-while loop.	U	3M	CO2
4	State the use of return statement.	U	3M	CO2
5	Define array.	R	3M	CO2
6	List any three differences between C & MAT lab.	U	3M	CO5
7	Differentiate address and de- referencing operator.	U	3M	CO3
8	Differentiate between structure and union.	U	3M	CO4
9	Define structure.	R	3M	CO4
10	State the use of SIMULINK.	R	3M	CO5

PART-B **5 x 8 = 40 marks**

Answer either (A) or (B) from each questions from part-B

Each question carries eight marks

11	(A) Explain the structure of C- language. or (B) Write the steps involved in executing C program.	Ap	8M	CO2
12	(A) Write a program to check whether the given string is palindrome or not. or (B) Explain passing of parameters to the function.	Ap	8M	CO3
13	(A) Explain declaration andinitialization of 1-D & 2-D array. Or (B) Write and explain the syntax of for loop and write a program to print Fibonacci series.	U	8M	CO2
14	(A) Explain initialization & accessing members of structure. Or (B) Explain structure with a program to read and print a book data base consisting of title of book, author, no.of pages, price as fields.	U	8M	CO4
15	(A) Explain syntax and usage of decision making statement if--- end statement in MAT Lab. Or (B) Explain the creation of mxn matrix in MAT Lab.	U	8M	CO5

PART- C **1×10M=10M**

Instructions: (1) Answer the following question
(2) The question carries ten marks.
(3) Answers should be comprehensive and the criterion for valuation is the content but not the length of the answer.

16 What is the output of given program?

```
#include <stdio.h>
int main()
{
  int x:
  x=4>8?5!=1<5==0?1:2:3;
 printf("%d",x);
 return 0;
}
```

An 10M CO5

ELECTRONIC CIRCUITS LAB PRACTICE

Course Code	Course title	No of periods/week	Total no of periods	Marks for FA	Marks for SA
BM-306	Electronic Circuits Lab Practice	04	60	40	60

Sl. No.	Unit Title	No. of Periods	COs Mapped
1	Amplifiers	20	**CO1**
2	Power amplifiers	15	**CO2**
3	Negative feedback Amplifiers	10	**CO3**
4	Wave shaping circuits	15	**CO4**
	TOTAL	**60**	

Course Objectives	1. To construct and measure various parameters of amplifiers.
	2. To plot the frequency response characteristics of negative feedback amplifier.
	3. To determine the efficiency of class A, B and C amplifier
	4.To learn the practical importance of wave shaping circuits,

CO No		Course Outcome
CO1	**BM-306.1**	construct the amplifiers and obtain different parameters.
CO2	**BM-306.2**	construct the feedback amplifiers and obtain different parameters.
CO3	**BM-306.3**	construct the power amplifiers and calculate the efficiency
CO4	**BM-306.4**	design linear and nonlinear wave shaping circuits

LEARNING OUTCOMES:

1. Amplifiers

1.1 Plot the frequency response characteristics of a single stage CE amplifier
1.2 Plot the frequency response characteristics of a RC coupled amplifier.
1.3 Plot the frequency response characteristics of a FET common source amplifier
1.4 To determine the effective current gain of a Darlington Pair

2. Power Amplifiers

2.1 To determine the efficiency of class A amplifier
2.2 To determine the efficiency of class B amplifier
2.3 To determine the efficiency of class C amplifier
2.4 Plot the frequency response characteristics of a RF tuned voltage amplifier

3. Negative Feedback Amplifiers

3.1 Plot the frequency response characteristics of negative feedback amplifier.
a) Calculate the gain, f_1, f_2 and band width from the response curve.
b) Observe the effect of feedback on gain, f_1, f_2 and band width for voltage series, current shunt, voltage shunt and current series feedback

4. Wave shaping circuits

4.1 Construct different Positive and Negative clipper circuits and obtain output waveforms with sinusoidal input
4.2 Realize a Clamper circuit and observe the input and output waveforms on CRO

CO-PO/PSO MATRIX

CO No	PO1	PO2	PO3	PO4	PO5	PO6	PO7	PSO1	PSO2	PSO3
BM-306.1	3							1		

BM-306.2	3	2	2	1				3		
BM-306.3	2	2	1					2		
BM-306.4	3		1					2		
Average	**2.75**	**2**	**1.33**	**1**				**2**		

3=Strongly mapped **2=Moderately mapped** **1=Slightly mapped**

NETWORK ANALYSIS LAB PRACTICE

Course Code	Course title	No. of periods/week	Total no. of periods	Marks for FA	Marks for SA
BM-307	Network Analysis Lab Practice	03	45	40	60

Sl. No.	Unit Title	No. of Periods	COs Mapped
1	Series and Parallel Resonance	10	**CO1**
2	Network theorems	15	**CO2**
3	Symmetrical circuits	10	**CO3**
4	Filters and Attenuators	10	**CO4**
	TOTAL	**45**	

Course Objectives	1. To measure Resistance, Inductance and Capacitance
	2. To verify series and parallel resonance.
	3. To construct and verify the network theorems.
	4. To measure the impedance of the symmetrical circuits
	5. To Design and obtain characteristics of low pass and high pass filters and attenuators.

CO No		Course Outcome
CO1	**BM-307.1**	Construct resonance circuits and determine different parameters.
CO2	**BM-307.2**	Demonstrate different network theorems.
CO3	**BM-307.3**	Design symmetrical networks and analyse its parameters
CO4	**BM-307.4**	Design filters and attenuators.

LEARNING OUTCOMES:

1. Resonance and Measurement of R, L, C

1.1 To measure the component values (R, L,C) using LCR meter
1.2 Perform an experiment to verify series resonance.
1.3 Perform an experiment to verify parallel resonance

2. Network theorems.
2.1 Perform an experiment to verify Thevenin's theorem.
2.2 Perform an experiment to verify Norton's theorem.
2.3 Perform an experiment to verify Super position theorem.
2.4 Perform an experiment to verify Maximum power transfer theorem.

3. To measure Impedance
3.1 To measure Zo of Symmetrical T and π networks

4. Design and implementation of filters & attenuators

4.1 Design and implement a constant-K Low pass filter with a cut off frequency of 10 KHz (or any other frequency) and evaluate the performance
4.2 Design and implement a constant-K High pass filter with a cut off frequency of 10 KHz (or any other frequency) and evaluate the performance
4.3. Design and Realize T-type Attenuator circuit and determine the actual attenuation

CO-PO/PSO MATRIX

CO No	PO1	PO2	PO3	PO4	PO5	PO6	PO7	PSO1	PSO2	PSO3
BM-307.1	2							1		

BM-307.2	2	1	1					2		
BM-307.3	1	2	2					2		
BM-307.4	1	1	2	1			1	3		
Average	**1.5**	**1.33**	**1.66**	**1**			**1**	**2**		

3=Strongly mapped **2=Moderately mapped** **1=Slightly mapped**

DIGITAL ELECTRONICS LAB

Course Code	**Course title**	**No. of periods/week**	**Total no of periods**	**Marks for FA**	**Marks for SA**
BM-308	Digital Electronics lab practice	04	60	40	60

Sl. No.	**Unit Title**	**No. of Periods**	**COs Mapped**
1	Basic gates, Arithmetic& Logical Circuits	16	CO1
2	Combinational Logic Circuits	14	CO2
3	Latches & Flip flops	14	CO3
4	Counters &Registers	16	CO4
	TOTAL	**60**	

Course Objectives	1. To construct logic gates and arithmetic circuits and obtain truth tables.
	2. To simulate combinational and sequential logic circuits using simulation software.
	3. To learn the practical importance of Digital Electronic Circuits.
	4. Acquaint with the working of displays and semiconductor memories

CO No		Course Outcome
CO1	**BM-308.1**	Test and verify the truth tables of logic gates and arithmetic circuits
CO2	**BM-308.2**	Construct combinational logic circuits and verify truth tables.
CO3	**BM-308.3**	Construct latches, flip-flops and verify truth tables.
CO4	**BM-308.4**	Design of shift registers and counters

LEARNING OUTCOMES:

1. Logic Gates & arithmetic circuits

1.1 Verify the truth tables of AND, OR,NOT, NAND, NOR, XOR Gates
1.2 Realize AND, OR, NOT, XOR gates using 2 input NAND and NOR Gates
1.3 Implement Half adder and full adder circuits using TTL/CMOS gates, and verify the truth tables

2. Combinational logic circuits

2.1 Verify the function of 4-bit magnitude comparator 7485 IC
2.2 Verify the truth table of Multiplexer IC 74153
2.3 Verify the truth table of BCD to 7 segment Decoder 7448 IC
2.4 Verify the Truth table of 74148 Encoder & 74138 Decoder IC

3. Sequential Logic Circuits

3.1 Verify the truth tables RS, JK, T and D Flip-flops
3.2 Construct a ripple counter using JK-FFs and obtain its timing waveforms

4. Counters and Shift registers

4.1 Verify the function of 7490 as decade and modulus counter, obtain timing waveforms.
4.2 verify the function of up/down counter using 74190/ 74193, change the modulus of the counter and verify
4.3 Verify the function of shift register (ICs like 7495, 74194 etc.)

CO-PO/PSO MATRIX

CO No	PO1	PO2	PO3	PO4	PO5	PO6	PO7	PSO1	PSO2	PSO3
BM-308.1	3	1						1		
BM-308.2	3		2					2		
BM-308.3	3	1	2					2		
BM-308.4	1	2	2	1			1	3		
Average	**2.5**	**1.33**	**2**	**1**			**1**	**2**		

3=Strongly mapped **2=Moderately mapped** **1=Slightly mapped**

C& MATLAB PRACTICE LABORATORY

Course Code	Course title	No. of periods/week	Total no. of periods	Marks for FA	Marks for SA
BM-309	C & MATLAB Lab Practice	03	45	40	60

Sl. No.	Unit Title	No. of Periods	COs Mapped
1	C Programming Basics, Decision and loop control statements	12	CO1
2	Exercises on functions	8	CO2
3	Arrays, Strings and Pointers in C	9	CO3
4	Structures and Unions	6	CO4
5	MAT Lab Practice	10	CO5
	Total	**45**	

Course Objectives	1. To familiarize with programming in C and MATLAB
	2. To understand the programming concepts of C and MATLAB
	3. To learn the practical importance and applications of programming in C and MATLAB.

CO No		Course Outcome
CO1	**BM-309.1**	Describe the usage of C Compiler and apply loop control statements.

CO2	**BM-309.2**	Applyfunctionsin C language
CO3	**BM-309.3**	Apply Arrays and strings in C language
CO4	**BM-309.4**	Apply structurers and unions in C- Language.
CO5	**BM-309.5**	Practice on basics of MATLAB.

LEARNING OUTCOMES:

1. C Programming Basics, Decision & Loop Control Statements

1.1 Familiarize with turbo Compiler features.

1.2 Practice formatted Input / Output (printf and scanf) functions.

1.3 Practice with Various Operators in C

1.4 Practice with Decision & Control (if, if-else, nested if –else) Statements

1.5 Practice with Decision control (Switch –case structure) statements

1.6 Practice with loop control Statements

2. Exercises on functions

2.1 Practice the use of functions in C

3. Arrays, Strings and Pointers in C

3.1 Write and run simple programs using single dimensional integer arrays

3.2 Write and run simple programs using multidimensional integer arrays.

3.3 Write and run simple programs using string functions for string comparison, copying and concatenation

3.4 Write and run simple programs using with pointers in 'C'

4. Structures and Unions

4.1 Write and run simple programs using Structures& Unions in C

5. MAT LAB PRACTICE

5.1 Familiarize with MATLAB Compiler environment, command line arguments, HELP and know the various tool boxes available in MATLAB

5.2 Write simple programs on decision making statements (if-end, if-else-end, nested if –else-end)

5.3 Write simple programs on loop control statements (while, for loops)

5.4 Write simple programs to create simple 1D & 2D arrays and perform addition & subtraction operations

5.5 Write simple programs to create 3X3 matrix and perform :i) addition ;ii) subtraction; iii) multiplication; iv) transpose and v) inverse operations

5.6 Write simple programs to illustrate plot commands such as: i) plot(x,y) ;ii) fplot() iii) title(); ivi) xlabel(); v) ylabel(); vi) legend() in MATLAB

5.7 Know the procedure to convert MATLAB program to C code

CO-PO/PSO MATRIX

CO No	PO1	PO2	PO3	PO4	PO5	PO6	PO7	PSO1	PSO2	PSO3

BM-309.1	3	2						2		
BM-309.2	3							2		
BM-309.3	2	2	1					2		
BM-309.4	2	2	2					3		
BM-309.5	2	1	2	1			1	1		
Average	2.4	1.75	1.66	1			1	2		

3=Strongly mapped **2=Moderately mapped** **1=Slightly mapped**

IV SEMESTER

Subject Code	Name of the Subject	Instruction period / week	Total Period	Scheme of Examination

4thSEMESTER

		Theory	Practical /Tutorial		Duration (hours)	Sessional Marks	End Exam Marks	Total Marks
THEORY								
BM-401	Engineering Mathematics-III	3	-	45	3	20	80	100
BM-402	Linear Integrated Circuits Applications	5	-	75	3	20	80	100
BM-403	Communication& Data Transmission	5	-	75	3	20	80	100
BM-404	Physiological Systems Engineering	5	-	75	3	20	80	100
BM-405	Bio-Medical Instrumentation	5	-	75	3	20	80	100
BM-406	Analytical Instrumentation Engineering	6	-	90	3	20	80	100
PRACTICAL								
BM-407	LIC & ECAD Lab Practice	-	3	45	3	40	60	100
BM-408	Communication skills lab	-	3	45	3	40	60	100
BM-409	Communication& Data Transmission Lab Practice	-	3	45	3	40	60	100
BM-410	Bio-Medical & Analytical Instrumentation Lab Practice	-	4	60	3	40	60	100
TOTAL		**29**	**13**	**630**	**-**	**280**	**720**	**1000**

C-20

ENGINEERING MATHEMATICS-III

Course		No. of	Total No. of	Marks for FA	Marks for SA

Code	Course Title	Periods/week	periods		
BM-401	Engineering Mathematics-III	3	45	20	80

S.No.	Unit Title	No. of periods	COs mapped
1	Higher order Linear Differential equations with constant coefficients	15	CO1
2	Laplace Transforms	18	CO2
3	Fourier Series	12	CO3
	Total Periods	**45**	

Course Objectives	(i) To learn the principles of solving differential equations of second and higher order. (ii) To comprehend the concept of Laplace transformations and inverse Laplace transformations. (iii) To understand the concept of Fourier Series expansion of functions.

Course Outcomes	CO1	Solve homogeneous and non-homogeneous differential equations of second and higher order.
	CO2	Find Laplace and inverse Laplace transforms of various functions.
	CO3	Expand given functions as Fourier series and half- range Fourier Sine and Cosine series.

ENGINEERING MATHEMATICS – III

Learning Outcomes

Unit-I

Differential Equations of higher order

C.O. 1 Solve homogeneous and non-homogeneous differential equation of second and higher order.

L.O 1.1 Solve Differential equations of the type $(aD^2 + bD + c)\, y = 0$ where a, b, c are real numbers and provide examples.

1.2 Solve higher order homogeneous differential equations with constant coefficients and provide examples.

1.3 Define complementary function, particular Integral and general solution of a non-homogeneous differential equation.

1.4 Describe the methods of solving *f(D) y = X* where *f(D)* is a polynomial of nth order and *X* is a function of the forms $k,\ e^{ax},\ \sin ax, \cos ax,\ x, x^n$ and their linear combinations where n is a positive integer, with examples.

Unit-II

Laplace Transforms

C.O. 2 Find Laplace and inverse Laplace transforms of various functions.

L.O. 2.1 Define Laplace Transform and explain the sufficient conditions of existence of Laplace Transform

2.2. Obtain Laplace transforms of standard functions and solve simple problems.

2.3 Write the properties of Laplace Transform – Linearity property, First shifting theorem (without proof) and Change of Scale property and solve simple problems.

2.4. Write the Laplace Transform of unit step function and second shifting theorem (without proof) and solve simple problems.

2.5. Write formulae for Laplace transform of functions with multiplication by t^n and division by t, Laplace transform of derivatives, evaluation of some definite integrals using Laplace Transforms and solve simple problems.

Syllabus for Unit test-I completed

2.6 Define inverse Laplace Transform, obtain inverse Laplace Transforms of standard functions and solve simple problems.

2.7 Write linearity property, first and second shifting theorems (without proof), change of scale property of inverse Laplace transform and solve simple problems.

2.8 Write inverse Laplace transforms of derivatives and integrals and solve simple problems.

2.9 Write inverse Laplace transforms of functions with multiplication by s and division by s and solve simple problems.

2.10 Write inverse Laplace transforms of functions using partial fractions and solve some simple problems.

2.10 Define convolution of two functions, state convolution theorem (without proof) and solve simple problems.

Unit-III

Fourier series

C.O. 3 Expand given functions as Fourier series and half- range Fourier Sine and Cosine series

L.O. 3.1 Define the orthogonality of functions in an interval.

3.2 Define Fourier series of a function in the intervals $(c,\ c+2\pi)$ and $(c,\ c+2l)$ and write the Euler's formulae for determining the Fourier coefficients.

3.3 Write sufficient conditions for the existence of Fourier series expansion of a function.

3.4 Find Fourier series of simple functions in the range (0 , 2π) and (-π , π)

3.5 Write Fourier series for even and odd functions in the interval $(-\pi,\ \pi)$ and $(-l, l)$ expand simple functions.

3.6 Write Fourier series expansion of a function over the interval (0, 2l) and $(-l,\ l)$ and expand simple functions.

3.7 Write half-range Fourier sine and cosine series of a function over the interval (0, π) and $(0,\ l)$ and expand simple functions.

Syllabus for Unit test-II completed

Engineering Mathematics – III

CO/PO - Mapping

	PO1	**PO2**	**PO3**	**PO4**	**PO5**	**PO6**	**PO7**	**PSO1**	**PSO2**	**PSO3**
CO1	3	2	1	1				2	3	2
CO2	3	3	3	3				3	3	3
CO3	3	3	3	3				3	3	3
Avg	**3**	**2.66**	**2.33**	**2.33**				**2.66**	**3**	**2.66**

3 = Strongly mapped (High), **2 =** Moderately mapped (Medium), **1 =** Slightly mapped (Low)

Note:

PO5: Appropriate quiz programme may be conducted at intervals and duration as decided by concerned teacher.

PO6: Seminars on applications of mathematics in various engineering disciplines are to be planned and conducted.

PO7: Such activities are to be planned that students visit library to refer standard books on Mathematics and latest updates in reputed national and international journals, attending seminars, learning mathematical software tools.

PSO1: An ability to understand the concepts of basic mathematical concepts and to apply them in various areas like computer programming, civil constructions, fluid dynamics, electrical and electronic systems and all concerned engineering disciplines.

PSO2: An ability to solve the Engineering problems using latest software tool, along with analytical skills to arrive at faster and appropriate solutions.

PSO3: Wisdom of social and environmental awareness along with ethical responsibility to have a successful career as an engineer and to sustain passion and zeal for real world technological applications.

PO- CO – Mapping strength

PO no	**Mapped with CO no**	**CO periods addressing PO in column I**	**Level (1,2 or 3)**	**Remarks**

		No	%		
1	CO1, CO2, CO3	45	100%	3	>40% Level 3 Highly addressed 25% to 40% Level 2 Moderately addressed 5% to 25% Level 1 Low addressed <5% Not addressed
2	CO1, CO2, CO3	37	82.2%	3	
3	CO1, CO2, CO3	32	71.1%	3	
4	CO1, CO2, CO3	32	71.1%	3	
5					
6					
7					
PSO 1	CO1, CO2, CO3	37	82.2%	3	
PSO 2	CO1, CO2, CO3	45	100%	3	
PSO 3	CO1, CO2, CO3	36	80%	3	

ENGINEERING MATHEMATICS – III

(Common Subject)

Course Content

Unit I: Differential Equations of higher order

1. Solve Homogenous linear differential equations with constant coefficients of order two and higher with emphasis on second order.
2. Solve Non-homogenous linear differential equations with constant coefficients of the form f(D)y = X where X is in the form k(constant), e^{ax}, sinax, cosax, x^n, where n is a positive integer, finding complimentary function, particular integral and general solution.

Unit II: Laplace Transforms

3. Definition, sufficient conditions for existence of LT, LT of elementary functions, linearity property, state first shifting theorem, change of scale property, multiplication by t^n, division by t, LT of derivatives and integrals, LT of unit step function, state second shifting theorem, inverse Laplace transforms- state shifting theorems and change of scale property, multiplication by s^n and division by s, derivatives, integrals, examples of inverse LT using partial fractions, state convolution theorem with simple examples.

Unit III: Fourier series

4. Orthogonality of trigonometric functions, Representation of a function in Fourier series over the interval $(c\ ,\ c+2\pi)$ and $(c\ ,\ c+2l)$, Euler's formulae , sufficient conditions for existence of Fourier series expansion of a function, Fourier series expansion of basic functions limited to

k(constant), $x, x^2, \sin ax, \cos ax, e^{ax}$ and their combinations over the intervals $(0, 2\pi), (-\pi, \pi), (0, 2l), (-l, l)$, Fourier series for even and odd functions over $(-\pi, \pi)$ and $(-l, l)$, Fourier half-range sine and cosine series over $(0, \pi)$ and $(0, l)$

Textbook:

Engineering Mathematics-I, a textbook for first year diploma courses, prepared & prescribed by SBTET, AP.

Reference Books:

1. B.S.Grewal, Higher Engineering Mathematics, Khanna Publishers
2. M.R. Spiegel, Schaum's Outline of Laplace Transforms, Schaums' Series
3. M.Vygodsky, Mathematical Handbook: Higher Mathematics, Mir Publishers, Moscow.

Blue print

S.	Chapter/	No of	Weighta	Marks wise	Question	COs

No	Unit title	Periods	ge allotted	distribution of weightage				wise distribution of weightage				mapped
				R	U	Ap	An	R	U	Ap	An	
1	Unit – I Higher order Linear Differential equations with constant coefficients	15	28	11	11	3	3	2	2	1	1	CO1
2	Unit - II Laplace Transforms	18	33	11	11	11	0	2	2	2	0	CO2
3	Unit - III Fourier Series	12	19	3	3	3	10	1	1	1	1	CO3
Total		**45**	**80**	**25**	**25**	**17**	**13**	**5**	**5**	**4**	**2**	

R: Remembering Type : 25 Marks
U: understanding Type : 25 Marks
Ap: Application Type : 17 Marks
An: Analysing Type : 13 Marks

C-20

Engineering Mathematics – III

Unit Test Syllabus

Unit Test	Learning Outcomes to be Covered
Unit Test-I	From LO 1.1 to 2.5
Unit Test-II	From LO 2.6 to 3.7

Unit Test I **C –20, BM-401**

State Board of Technical Education and Training, A. P

FOURTH SEMESTER

Subject name: **Engineering Mathematics-II**

Sub Code: **BM-401**

Time : 90 minutes Max.marks:40

Part-A **16Marks**

Instructions*:* **(1) Answer all questions.**

(2) First question carries four marks and the remaining questions carry three marks each

1. Answer the following:
   a. Write the auxiliary equation for given differential equation $\left(D^2+4\right)y=0$ (CO1)
   b. For given differential equation $f(D)y=0$, if roots of auxiliary equation are 1,-1,then $y=$ _____ (CO1)
   c. $L\left\{e^{3t}\right\}=$ _____ (CO2)
   d. $L\left\{f(t)\right\}=\overline{f}(s)$ then $L\left\{e^{at}f(t)\right\}=\overline{f}(s+a)$: State TRUE/FALSE (CO2)

2. Solve $\left(D^2-2D+1\right)y=0.$ (CO1)
3. Find the particular integral of $\left(D^2+D+4\right)y=e^x$ (CO1)
4. Evaluate $L\left\{(t-1)^2\right\}$ (CO2)
5. Evaluate $L\left\{t^2+2\cos t+3\sin t\right\}$ (CO2)

Part-B **3×8=24**

Instructions: (1) Answer **all** questions.
(2) Each question carries **eight** marks
(3) Answer should be comprehensive and the criterion for valuation is the content but not the length of the answer.

6. A) Solve $\left(D^4-5D^2+4\right)y=0.$ (CO1)

or

B) Solve $\left(D^2+D-6\right)y=1+e^{-3x}.$ (CO1)

7. A) Solve $\left(D^2+3D+2\right)y=x^2+\sin x.$ (CO1)

or

B) Solve $\left(D^2-D\right)y=2e^x+3\cos x.$ (CO1)

8. A) Evaluate $L\left\{e^{3t}\cos^2 t\right\}$ (CO2)

or

B) Evaluate $L\left\{e^t\left(t+1\right)^2\right\}$ (CO2)

-o0o-

Unit Test II

C –20, BM-401

State Board of Technical Education and Training, A. P

FOURTH SEMESTER

Subject name: **Engineering Mathematics-II**

Sub Code: **BM-401**

Time : 90 minutes Max.marks:40

Part-A **16Marks**

Instructions: (1) Answer **all** questions.

(2) First question carries **four** marks and the remaining questions carry **three** marks each

1. Answer the following:

   a. $L\{f(t)\} = \overline{f}(s)$ then $L\{tf(t)\} = -\frac{d}{ds}\left(\overline{f}(s)\right)$: State TRUE/FALSE (CO2)

   b. $L^{-1}\left\{\frac{1}{s-3}\right\} = ?$ (CO2)

   c. $L^{-1}\left\{\frac{1}{s^2+a^2}\right\} = ?$ (CO2)

   d. Write the Fourier series for the function $f(x)$ in the interval $c < x < c+2\pi.$ (CO3)

2. Evaluate $L\left\{te^t\right\}.$ (CO2)

3. Evaluate $\int_0^\infty e^{-3t}\sin 4t dt.$ (CO2)

4. Evaluate $L^{-1}\left\{\frac{3}{s+4}+\frac{2}{s^2+16}-\frac{s}{s^2-4}\right\}.$ (CO2)

5. Evaluate Fourier coefficient a_0 for $f(x)$ in the interval $(-\pi,\pi).$ (CO3)

Part-B **3×8=24**

Instructions: **(1) Answer all questions.**
(2) Each question carries eight marks
(3) Answer should be comprehensive and the criterion for valuation is the content but not the length of the answer.

6. A) Evaluate $L\left\{te^{-t}\cos t\right\}$. (CO2)

or

B) Evaluate $L\left\{\frac{\cos at-\cos bt}{t}\right\}$. (CO2)

7. A) Evaluate $L^{-1}\left\{\frac{s}{(s+1)(s^2+1)}\right\}$. (CO2)

or

B) Evaluate $L^{-1}\left\{\frac{s}{(s-1)^4}\right\}$. (CO2)

8. A) Obtain the Fourier series for the function $f(x)=e^x$ in the interval $(0,2\pi)$. (CO3)

or

B) Obtain the half range Fourier cosine series of $f(x)=x^2$ in $(0,1)$. (CO3)

-o0o-

END EXAM MODEL PAPER

STATE BOARD OF TECHNICAL EDUCATION, A.P
FOURTH SEMESTER
ENGINEERING MATHEMATICS –BM- 401

TIME : 3 HOURS **MODEL PAPER- I** **MAX.MARKS : 80M**

PART-A

Answer All questions. Each question carries THREE marks. **10x3=30M**

1. Solve $\left(D^2-3D+2\right)y=0.$ **CO 1**
2. Solve $\left(D^2+D+1\right)y=0.$ **CO 1**
3. Find the particular integral of differential equation $\left(D^2+4\right)y=\sin 2x.$ **CO 1**
4. Find the particular integral of differential equation $\left(D^2+3D+2\right)y=e^{3x}.$ **CO 1**
5. Find $L\left\{2e^{3t}+\sin 3t+\cosh t\right\}.$ **CO2**
6. Find $L\left\{e^t\cos 4t\right\}.$ **CO2**
7. Find $L^{-1}\left\{\frac{1}{s^2}+\frac{4}{s^2+4}+\frac{3s}{s^2-9}\right\}.$ **CO2**
8. Find the value of a_0 in the Fourier expansion of $f(x)=e^x$ in the interval $(0,2\pi).$ **CO3**
9. Find the Fourier coefficients of $f(x)$ in the interval $(-\pi,\pi).$ **CO3**
10. Find the value of a_1 in the half range cosine series of $f(x)=k$ in the interval $(0,\pi).$ **CO3**

PART-B

Answer All questions. Each question carries EIGHT marks. **5x8=40M**

11. A) Solve $\left(D^3-6D^2+11D-6\right)y=0.$ **CO1**

    Or

    B) Solve $\left(D^2-9\right)y=e^{3x}+e^{-3x}.$ **CO1**

12. A) Solve $\left(D^2-4D+4\right)y=\sin 3x.$ **CO1**

    Or

    B) Solve $\left(D^2+2D+2\right)y=x^2+x+1.$ **CO1**

13. A) Evaluate $L\left\{te^t\cos t\right\}.$ **CO2**

    Or

    B) Evaluate $L\left\{t^2\cos 2t\right\}.$ **CO2**

14. A) Evaluate $L\left\{\frac{\sin 5t \sin t}{t}\right\}$. **CO2**

Or

B) Evaluate $\int_0^\infty \frac{\sin t}{t} dt$. **CO2**

15. A) Find $L^{-1}\left\{\frac{1}{s(s+1)(s+2)}\right\}$. **CO2**

Or

B) Using convolution theorem find $L^{-1}\left\{\frac{s}{(s^2+1)(s^2+4)}\right\}$. **CO2**

PART-C

Answer the following question. Question carries TEN marks. 1x10=10M

16. Find the Fourier expansion of $f(x) = x + x^2$ in the interval $(-\pi, \pi)$ and hence deduce that $\frac{1}{1^2} - \frac{1}{2^2} + \frac{1}{3^2} - \frac{1}{4^2} + = \frac{\pi^2}{12}$. **CO3**

STATE BOARD OF TECHNICAL EDUCATION, A.P

FOURTH SEMESTER

ENGINEERING MATHEMATICS – BM-401

TIME : 3 HOURS **MODEL PAPER- 2** **MAX.MARKS : 80M**

PART-A

Answer All questions. Each question carries THREE marks. **10x3=30M**

1. Solve $\left(D^2+4D+4\right)y=0.$ **CO1**
2. Solve $\left(D^2+9\right)y=0.$ **CO1**
3. Find the particular integral of differential equation $\left(D^2-4D+3\right)y=e^{4x}.$ **CO1**
4. Find the particular integral of differential equation $\left(D^2-4D-5\right)y=\cos 2x.$ **CO1**
5. Find $L\left\{2-e^{-2t}+\sinh 6t\right\}.$ **CO2**
6. Find $L\left\{e^{-2t}t^2\right\}.$ **CO2**
7. Find $L^{-1}\left\{\frac{1}{s^2}+\frac{4}{s^2+4}+\frac{3s}{s^2-9}\right\}.$ **CO2**
8. Find the value of a_0 in the Fourier expansion of $f(x)=x+x^2$ in the interval $(-1,1).$ **CO3**
9. Write Euler's formula of Fourier expansion of $f(x)$ in the interval $(c,c+2\pi).$ **CO3**
10. Find the value of a_1 in the half range cosine series of $f(x)=\pi$ in the interval $(0,\pi).$ **CO3**

PART-B

Answer All questions. Each question carries EIGHT marks. **5x8=40M**

11. A) Solve $\left(D^3+1\right)y=0.$ **CO1**

Or

B) Solve $\left(D^2+D-6\right)y=e^{3x}+e^{-3x}.$ **CO1**

12. A) Solve $\left(D^2-3D+2\right)y=\cos 3x.$ **CO1**

Or

B) Solve $\left(D^2+2D+1\right)y=2x+x^2.$ **CO1**

13.A) Evaluate $L\left\{e^{3t}\cos^2 t\right\}$. **CO2**

Or

B) Evaluate $L\left\{t^2\cos 2t\right\}$. **CO2**

14.A) Evaluate $L\left\{\frac{e^{-at}-e^{-bt}}{t}\right\}$. **CO2**

Or

B) Using Laplace transforms evaluate $\int_0^\infty \cos 3t dt$. **CO2**

15.A) Find $L^{-1}\left\{\log\left(\frac{s^2+1}{(s-1)^2}\right)\right\}$. **CO2**

Or

B) Using convolution theorem find $L^{-1}\left\{\frac{1}{(s^2+1)(s+1)}\right\}$. **CO2**

PART-C

Answer the following question. Question carries TEN marks. **1x10=10M**

16.Find the Fourier expansion of $f(x)=(\pi-x)^2$ in the interval $0\prec x\prec 2\pi$ and hence deduce that $\frac{1}{1^2}+\frac{1}{2^2}+\frac{1}{3^2}+---=\frac{\pi^2}{6}$. **CO3**

LINEAR INTEGRATED CIRCUITS APPLICATIONS

Course Code	Course title	No. of periods/week	Total no. of periods	Marks for FA	Marks for SA
BM-402	**Linear Integrated Circuits Applications**	05	75	20	80

S No	Unit Title	No. of Periods	COs Mapped
1	Special semiconductor devices	12	CO1
2	Oscillators	17	CO2
3	Multivibrators	12	CO3
4	Operational Amplifier and it's Applications	20	CO4
5	A/D & D/A Converters	14	CO5
	TOTAL	**75**	

Course Objectives	1. To learn the working principles of special semiconductor devices
	2. To explain different oscillators
	3.To describe the working of different Multivibrators
	4. To analyze the applications of linear ICs.
	5. To explain working of A/D and D/A converters

CO No		Course Outcome
CO1	**BM-402.1**	Explain the working of different special semiconductor devices.
CO2	**BM-402.2**	Describe the operation of different oscillators
CO3	**BM-402.3**	Explain the working of Multivibrators
CO4	**BM-402.4**	Analyse the various applications of operational amplifier
CO5	**BM-402.5**	Describe Analog to digital and digital to analog converters.

LEARNING OUTCOMES:

Understand the working of special semiconductor devices

1.1 Explain the working principle of Tunnel diode.
1.2 Draw the Symbol and V-I characters of Tunnel diode.
1.3 Draw the equivalent CKT of UJT and explain its operation.
1.4 Draw UJT characteristics and explain significance of negative resistance region.
1.5 Draw the symbol of SCR.
1.6 Draw the construction of SCR and explain its operation.
1.7 Draw and explain V-I characteristics of SCR (Forward and Reverse)
1.8 List the applications tunnel diode, UJT and SCR.

Understand the Working of Oscillator.

2.1 Define an electronic oscillator
2.2 Classify different oscillators on the basis of principle of operation, Waveform generation, frequency and associated circuit parameters.
2.3 Explain the condition for an amplifier to oscillate.
2.4 Explain Barkhausen criterion for oscillators.
2.5 Mention the reasons for instability of oscillators.
2.6 Mention the remedies for Instability of oscillators
2.7 Draw and explain the circuits of Hartley, Collpitt's, tuned collector and crystal oscillators (using Transistors)
2.8 Draw and explain the circuits of RC phase shift and Wein bridge type oscillators.
2.9 Compare the merits and demerits of RC phase shift and Wein bridge oscillators.
2.10 Define negative resistance of an active device.
2.11 Draw and explain the operation of an oscillator using negative resistance devices like UJT and tunnel diode with circuits.
2.12 Draw and explain the working of blocking oscillator and know its applications.

Understand the Working of a Multi-vibrator.

3.1 Draw the circuit diagram of a transistor switch.
3.2 Explain the working of above circuit.
3.3 Classify the Multivibrators on the basis of their operating point Stability
3.4 Draw and explain the circuit of BistableMultivibrator using transistors.
3.6 Draw and explain the Monostable circuit using transistors
3.7 Draw and explain the circuit of Schmitt trigger using transistors.
3.8 Draw and explain AstableMultivibrator using transistor.

Understand the characteristics of the operational amplifier.

4.1 Draw the circuit of differential amplifier and explain its operation.
4.2 List the basic specifications of ideal operational amplifier.
4.3 Explain the operational amplifier.
4.4 Define A_v, Z_o, Z_i, bandwidth, input off set voltage and give their typical values for an ideal operational amplifier.
4.5 Define CMRR and state the need for high CMRR
4.6 Draw the block diagram and list the different blocks in operational amplifier
4.7 Draw the pin diagram of metal IC package and dual in line package for typical IC LM 741.
4.8 Know the power supply requirements for an operational amplifier
4.9 Define the terms input offset voltage, input offset current, input bias current, input resistance, input capacitance, supply voltage rejection ratio, large signal voltage gain, slew rate, gain bandwidth product with reference to operational amplifier.
4.10 Mention the effects of negative feedback on an operational amplifier
4.11 Draw the circuits of non-inverting, inverting operational amplifier and explain its operation.

4.12 Draw and explain the circuits of summing amplifier, difference amplifier, voltage follower and differentiator, integrator, comparator, Voltage-current converter, current-Voltage converter using OP-Amp

4.13 List the limitations of passive filters

4.14 Draw and explain i) Active filters (LPF, HPF, BPF) of first order using OPAMP.
ii) Saw tooth generator circuit using Op-amp.

4.15 Explain the need for linear time base generator.

4.16 Define sweep signal and list the applications of sweep circuits.

4.17 Distinguish between voltage time base and current time base generators

Understand A/D and D/A Converters.

5.1 State the need for A/D and D/A converters.

5.2 Explain the terms Resolution, Accuracy, Monotonicity and Settling time of D/A converter.

5.3 Explain D/A conversion using binary weighted resistors.

5.4 Explain D/A conversion using R-2R ladder network.

5.5 Explain A/D conversion using counter method.

5.6 Explain A/D conversion using successive approximate method.

CO-PO/PSO MATRIX

CO No	PO1	PO2	PO3	PO4	PO5	PO6	PO7	PSO1	PSO2	PSO3
BM-402.1	3							1		
BM-402.2	3	1						2		
BM-402.3	3							2		
BM-402.4	1	2	2				1	3		
BM-402.5	2	1						2		
Average	**2.4**	**1.33**	**2**				**1**	**2**		

3=Strongly mapped **2=Moderately mapped** **1=Slightly mapped**

HYPONATED COURSE CONTENTS

1. SPECIAL SEMICONDUCTOR DEVICES.

Working principle of Tunnel diode, UJT, SCR ; Applications.

2. OSCILLATORS:

Sinusoidal oscillators - LC oscillators - Tuned collector oscillator, Hartley, Colpits and Crystal oscillators - RC phase shift, Wein bridge Oscillators, negative resistance oscillators – tunnel diode, UJT, Blocking oscillator.

3. MULTIVIBRATORS:

Transistor as a switch, transistor Bistable Multivibrator and Schmitt trigger, Monostable Mult ivibrators, wave forms, gating period calculations, triggering, maximum frequency, Astable Multivibrator, wave form, frequency calculations.

4. OPERATIONAL AMPLIFIER:

Differential amplifiers, block diagram of operational amplifiers, definition of inputoffset voltage,input offset current, bias current, input resistance, input capacitance, CMRR,SVR, SR, GBW,equivalentcircuit of OP-amp. Summer, voltage follower, difference amplifier, comparator, Integrator, differentiator, active filters first order, Voltage to current converter, current to voltage converter, sweep circuits.

5. A/D and D/A Converters

A/D and D/A Converters, define the terms resolution, Accuracy, Monotonicity and settling time of D/A converter.

REFERENCE BOOKS

1. Bogart, Electronic Devices and Circuits, TMH
2. Milliman and Hallkias, Integrated Electronics , TMH
3. Ramakant A. Gayakwad,Operational Amplifiers and Linear Integrated circuits,Fourth edition (29 May 2015), Pearson Education;
4. D Roy Chowdary, Linear Integrated Circuits, 4th edition, New Age International
5. George Clayton, Operational Amplifiers, 5th edition, Newnes

BLUE PRINT:

Sl. No.	Unit Title	No. of Periods	Weightage Allotted	Marks Wise distribution of weightage				Question Wise distribution of weightage				COs mapped
				R	U	Ap	An	R	U	Ap	An	
1	Special semiconductor devices	12	14	3	8	3	-	1	1	1	-	CO1
2	Oscillators	17	14	3	8	3	-	1	1	1		CO2
3	Multivibrators	12	11	3	8	3		1	1	1		CO3
4	Operational Amplifier and it's Applications	20	17	3	3	8		1	1	1		CO4
5	A/D & D/A Converters	14	14	3	3	8	-	1	1	1	-	CO5
	HOTs question from chapters 2/3/4		10				10				1	
Total		**75**	**80**	15	30	25	10	5	5	5	1	

Table specifying the scope of syllabus to be covered for Unit test-I & Unit Test-II

Unit Test	Learning outcomes to be covered
Unit Test-I	From 1.1 to 3.4
Unit Test-II	From 3.5 to 5.6

DBME UNIT TEST-I

MODEL QUESTION PAPER (C-20)

FOURTH SEMESTER
LINEAR INTEGRATED CIRCUITS APPLICATIONS (BM-402)

Time: 90 Minutes Total Marks: 40

PART-A **16 Marks**

Instructions: (1) Answer **all** questions.
(2) First question carries four marks and each of rest carries **three** marks.
(3) Answer for Q.No.2 to 5 should be brief and straight to the point and shall not exceed ***five*** simple sentences.

1.	a. Draw the symbol of UJT ,Tunnel diode. b. List any two applications of SCR. c. List any two sinusoidal oscillators. d. Write any two advantages of wein bridge oscillator.	R	4M	CO1, CO2
2.	Mention the applications of UJT.	U	3M	CO1
3	Define an electronic oscillator.	R	3M	CO2
4	Define negative resistance region of an active device.	R	3M	CO2
5	Classify the multivibrators based on operating point stability.	U	3M	CO3

PART-B **3 x 8 = 24 marks**

Answer either (A) or (B) from each questions from part-B
Each question carries eight marks

6	Draw the diagram of SCR construction in detail & explain the working principle. OR (B) Explain the working of principle of Tunnel diode with V-I characteristics.	U	8M	CO1
7.	Draw &Explain the working of crystal oscillator. OR (B) Draw &Explain the working of RC phase shift oscillator.	U	8M	CO2
8.	Draw and explain the working of Bistable multivibrator using transistor. OR (B) Draw and explain the working of blocking oscillator.	U	8M	CO3, CO2

C-20-BM -402

BOARD DIPLOMA EXAMINATION, (C-20)
DBME- FOURTH SEMESTER
EXAMINATION
LINEAR INTEGRATED CIRCUITS APPLICATIONS

Time: 3Hours Total Marks: 80M

PART- A10×3M=30M

Instructions: (1) Answer all questions
(2) Each question carries three marks
(3) Answers should be brief and straight to the point and shall not exceed five simple sentences.

1.	Mention the applications of UJT.	U	3M	CO1
2.	Draw the symbol of UJT , Tunnel diode, SCR.	U	3M	CO1
3	Define an electronic oscillator.	R	3M	CO2
4	Define negative resistance region of an active device.	R	3M	CO2
5	Classify the multivibrators based on operating point stability.	U	3M	CO3
6	Draw the circuit of transistor switch.	U	3M	CO3
7	Define CMRR.	R	3M	CO4
8	List the limitations of passive filters.	U	3M	CO4
9	State the need for A/D converter.	U	3M	CO5
10	Define the terms Resolution, accuracy & monotonocity of D/A converter.	R	3M	CO5

PART-B 5 x 8 = 40 marks

Answer either (A) or (B) from each questions from part-B
Each question carries eight marks

11	Draw the diagram of SCR construction in detail & explain the working principle. OR (B) Explain the working of principle of Tunnel diode with V-I characteristics.	U	8M	CO1

12	(A) Draw &Explain the working of crystal oscillator. OR (B) Draw &Explain the working of RC phase shift oscillator.	U	8M	CO2
13	(A)Define the terms gain- bandwidth product, supply voltage rejection ratio, input offset voltage and input bias current. OR (B) Draw the circuit and explain the working of op-amp as summing amplifier and integrator.	Ap	8M	CO3
14	(A)Draw and explain the working of monostable multivibrator using transistor. OR (B) Draw and explain the working of Schmitt trigger using transistor.	U	8M	CO4
15	(A) Explain D/A conversion using R-2R ladder network. OR (B) Explain A/D conversion using counter method.	U	8M	CO5

PART- C **1×10M=10M**

Instructions: (1) Answer the following question
(2) The question carries ten marks.
(3) Answers should be comprehensive and the criterion for valuation is the content but not the length of the answer.

16	Can we generate square wave by using bistable multivibrator, if not which multivibrator can be used to generate square wave& how?	An	10M	CO5

COMMUNICATION AND DATA TRANSMISSION

Course code	Course title	No. of periods/week	Total no. of periods	Marks for FA	Marks for SA
BM - 403	COMMUNICATION AND DATA TRANSMISSION	05	75	20	80

SI. NO	Unit Title	No. of Periods	COs Mapped
1	Modulation methods	20	CO1
2	Transmitters and receivers	15	CO2
3	Antennas and wave propagation	10	CO3
4	Fundamentals of digital communication	10	CO4
5	Digital data modulation and demodulation	20	CO5
	TOTAL	**75**	

Course Objectives	1. To analyze and explain various analog modulation schemes 2. To Familiarize on various digital modulation and pulse modulation techniques. 3. To compare the strength and weakness of various communication systems

CO No		Course Outcome
CO1	**BM-403.1**	Explain modulation methods used in communication systems
CO2	**BM-403.2**	Describe the Transmitters and Receivers
CO3	**BM-403.3**	Analyze the principles of Antenna and wave propagation
CO4	**BM-403.4**	Explain the Digital communication methods.
CO5	**BM-403.5**	Analyze the Digital data modulation and demodulation methods

Learning Outcomes

1.0 Understand modulation methods used in communication systems

1.1 Know the electromagnetic spectrum
1.2 Explain the need for modulation in communication system
1.3 Classify different modulation schemes
1.4 Define AM, FM, PM with waveforms.
1.5 Derive all the mathematical expressions for AM and FM
1.6 State the need for pre emphasis and de-emphasis in FM
1.7 Explain generation of SSB using phase shift method
1.8 Explain vestigial sideband (VSB) transmission
1.9 State sampling theorem
1.10 List the types of pulse modulation methods with waveforms
1.11 List the merits, demerits and applications of above all modulation schemes

2.0 Transmitters and Receivers

2.1 Classify the radio transmitters
2.2 Explain the block diagram of AM transmitter.
2.3 Explain the working principle of FM transmitter with AFC
2.4 Explain the working principle of indirect FM transmitter
2.5 Classify the radio receivers.
2.6 Explain the working principle of super heterodyne receiver
2.7 Explain the working principle of FM receiver
2.8 Explain the quantization process to obtain PCM signal
2.9 Explain quantization noise in PCM and methods to reduce it
2.10 Explain the working principle of PCM system with the aid of block diagram.

3.0 Understand principles of Antenna and wave propagation

3.1. State the purpose of an antenna.
3.2. Explain the radiation of electromagnetic (EM) waves from an antenna.
3.3. State the purpose of antenna array and mention its types.
3.4. Define the following terms with respect to antenna: Antenna gain, antenna resistance, radiated power, radiation Pattern, beam width, aperture area, effective length, efficiency and polarization.
3.5. Explain resonant and non-resonant antennas.
3.6. Explain the effects of antenna height.
3.7. Explain the effect of ground on antennas.
3.8. List the various types of antennas based on frequency.

3.9. Mention the various methods of wave propagation.
3.10. Explain ground wave, space wave & sky wave propagation.
3.11. Explain the basic block diagram of satellite communication system.
3.12. Explain the basic RADAR set.

4.0 Understand the fundamentals of Digital communication

4.1 Types of Noise.
4.2 Explain SNR, noise figure, noise temperature and their importance.
4.3 Explain the effect of noise on digital data communication system.
4.4 Explain about error control.
4.5 Explain error detection codes.
4.6 Explain error correction codes in detail: ARQ, FEC.
4.7 Define the terms average information, information rate and channel capacity.
4.8 State the relation between information rate and channel capacity.
4.9 List the advantages of digital transmission.

5.0 Digital data modulation and demodulation methods

5.1 State modes of data transfer.
5.2 List the modulation techniques used in digital data transmission: ASK, FSK, PSK, DPSK And QPSK with waveforms.
5.3 Explain the methods for generating and demodulating the following signals.
(i) ASK (ii) FSK (iii) PSK (iv) DPSK.
5.4 Mention the need for multiplexing and types of multiplexing.
5.5 Explain the principle of TDM and FDM.
5.6 Explain the working principle of TDM with block diagram.
5.7 Explain the working principle of FDM with block diagram

CO-PO/PSO MATRIX

CO No	PO1	PO2	PO3	PO4	PO5	PO6	PO7	PSO1	PSO2	PSO3
BM-403.1	3							2		
BM-403.2	3	2						2		
BM-403.3	3							2		
BM-403.4	3		1	1				2		
BM-403.5	3	2						2		
Average	**3**	**2**	**1**	**1**				**2**		

3=Strongly mapped **2=Moderately mapped** **1=Slightly mapped**

HYPONATED COURSE CONTENTS

1. Modulation methods: Need for modulation in communication system. Elementary concepts of AM, FM, PM, PAM, PWM, PPM, mention SSB and vestigial side bands, applications of above modulation schemes

2. Transmitters and receivers: Classification of Transmitters, A.M, SSB, F.M. Block diagram of different transmitters and their specifications, function of each block, Classification of receivers, receiver block diagram for reception of AM and FM signals. PCM system

3. Antennas and wave propagation: Fundamentals of antenna, Defining important terms with respect to antenna, Resonant and non resonant antenna, Effects of antenna height, Effect of Ground on antennas, Ground ,space wave & sky wave propagation, Basic block diagram of Satellite and radar systems

4. Fundamentals of Digital Communications: Types of Noise, SNR, noise figure, Noise temperature with their importance, Effect of noise on digital data communication, error control, error detection codes, error correction codes: ARQ, FEC, Average information, information rate and channel capacity Relation between information rate and channel capacity

5 Digital data modulation and demodulation methods: Modulation techniques used in digital data transmission like ASK, FSK, PSK, DPSK,QPSK with waveforms, Methods for generating and demodulating ASK, FSK, PSK, DPSK, Types of multiplexing, TDM, FDM systems.

REFERENCE BOOKS:

1. George Kennedy- Bernard Davis, Electronic Communication System ,Tata Mcgraw Hill Education Private Limited
2. S.Salivahanam, A.Vallavaraj&C.Gnanapriya, Signal Systems and Communication ,TMH
3. Herbert Taub& Donald L Schilling, Principles Of Electronic Communication Systems, 3rd Edition-2009.McGraw Hill Education (India) Private Limited
4. G.K.Mithal, Radio communication - khanna publishers
5. Wayne Thomassi, Electronic communication systems 4th edition Pearson publication.
6. Roy Blake,Electronic Communication Systems,2nd edition (5 October 2001),Delmar Cengage

Learning;

7. Behrouz A. Forouzan ,Data Communications and Networking,3rd edition,, 2004,TMH.

MODEL BLUE PRINT

SI. No.	Major Topics	No. of periods	Weightage of marks	Marks wise Distribution of Weightage				Question wise Distribution of Weightage				COs Mapped
				R	U	Ap	An	R	U	Ap	An	
1	Modulation methods	20	14	3	8	3		1	1	1		CO1
2	Transmitters and receivers	15	14	3	8	3		1	1	1		CO2
3	Antennas and wave propagation	10	14	3	8	3		1	1	1		CO3
4	Fundamentals of digital communication	10	14	3	8	3		1	1	1		CO4
5	Digital data modulation and demodulation	20	14	3	8	3		1	1	1		CO5
	HOTs question from chapters 1/5		10				10				1	
	Total	**75**	**80**	**15**	**40**	**15**	**10**	**5**	**5**	**5**	**1**	

Table specifying the scope of syllabus to be covered for Unit test-I & Unit Test-II

Unit Test	Learning outcomes to be covered
Unit Test-I	From 1.1 to 3.8
Unit Test-II	From 3.9 to 5.7

DBME UNIT TEST-I
MODEL QUESTION PAPER (C-20)
FOURTH SEMESTER
COMMUNICATION AND DATA TRANSMISSION (BM-403)

Time: 90 Minutes | Total Marks: 40

PART-A **16 Marks**

***Instructions*:** (1) Answer **all** questions.
(2) First question carries four marks and each of rest carries **three** marks.
(3) Answer for Q.No.2 to 5 should be brief and straight to the point and shall not exceed ***five*** simple sentences.

1.	a. List any two merits of AM. b. Frequency range of FM……. c. Quantization noise present in PCM (State True/False). d. Define antenna gain.	U	4M	CO1, CO2, CO3
2.	Define AM and draw the wave form.	R	3M	CO1
3	State sampling theorem.	R	3M	CO2
4	Classify the radio receivers.	U	3M	CO2
5	Write the various types of antennas based on frequency.	U	3M	CO3

PART-B **3 x 8 = 24 marks**

Answer either (A) or (B) from each questions from part-B

Each question carries eight marks

6	(A) Derive all mathematical expressions for FM. Or Explain the generation of SSB using phase shift method.	An	8M	CO1
7.	(A) Explain the working principle of super heterodyne receiver. Or Draw & Explain the working principle of PCM system.	U	8M	CO2
8.	(A) Define the following terms with respect to antenna a) Antenna gain, b) antenna resistance, c) beam width, d) polarization OR Explain block diagram of AM transmitter.	U	8M	CO3, CO2

C-20-BM -403

BOARD DIPLOMA EXAMINATION, (C-20)
DBME- FOURTH SEMESTER EXAMINATION
COMMUNICATION AND DATA TRANSMISSION

Time: 3Hours Total Marks: 80M

PART- A10×3M=30M

Instructions: (1) Answer all questions
(2) Each question carries three marks
(3) Answers should be brief and straight to the point and shall not exceed five simple sentences.

1.	Define AM and draw the wave form.	R	3M	CO1
2.	State sampling theorem.	R	3M	CO1
3	Classify the radio receivers.	U	3M	CO2
4	Define quantization noise.	R	3M	CO2
5	Write the various types of antennas based on frequency.	U	3M	CO3
6	What is the effect of antenna height on wave propagation.	U	3M	CO3
7	Define the terms SNR and noise figure.	R	3M	CO4
8	List any three advantages of digital communication.	U	3M	CO4
9	List the modulation techniques used in digital data transmission.	U	3M	CO5
10	What is the need for multiplexing?	U	3M	CO5

PART-B 5 x 8 = 40 marks

Answer either (A) or (B) from each questions from part-B

Each question carries eight marks

11	(A) Derive all mathematical expressions for FM. OR (B) Explain the generation of SSB using phase shift method.	U	8M	CO1
12	(A) Explain the working principle of super heterodyne receiver. OR	U	8M	CO2

(B) Draw & Explain the working principle of PCM system.

13	(A) Define the following terms with respect to antenna a) Antenna gain b) antenna resistance c) beam width d) polarizati OR (B) Explain ground wave and space wave propagation.	U	8M	CO3
14	(A) Explain the error correction code ARQ. OR (B) Explain the effect of noise on digital data communication systems.	An	8M	CO4
15	(A) Explain the method of generating and demodulating ASK signals. OR (B) Explain the working principle of TDM with block diagram.	U	8M	CO5

PART- C 1×10M=10M

Instructions: (1) Answer the following question
(2) The question carries ten marks.
(3) Answers should be comprehensive and the criterion for valuation is the content but not the length of the answer.

16	The message bit sequence input to a DPSK modulator is 1,1,0,0,1,1. The carrier phase during the reception of the first two message bits is π,π. What will be the carrier phase for the remaining four message bits and why it is so?	An	10M	CO5

PHYSIOLOGICAL SYSTEMS ENGINEERING

Course code	Course title	Total no. of periods/Week	Total no. of periods	Marks for FA	Marks for SA
BM-404	PHYSIOLOGICAL SYSTEMS ENGINEERING	5	75	20	80

SI.NO.	Unit Title	No. of Periods	COs Mapped
1.	Organization of the Human Body	10	CO1
2.	Principles of Support and Movement	15	CO2
3.	Control Systems of the Human Body	10	CO3
4.	Maintenance of the Human Body	30	CO4
5.	Interpret the functioning of Special senses	10	CO5
	TOTAL	**75**	

Course Objectives	1. Student would familiarize with the human body anatomy and physiology. 2. Know the structure and function of cell. 3. Student would familiarize with various organs structure and function.

CO No		Course Outcome
CO1	**BM-404.1**	Describe the organization of the Human body.
CO2	**BM-404.2**	Apply the Principles of support and movement on Human body
CO3	**BM-404.3**	Apply the Control Systems of the Human Body
CO4	**BM-404.4**	Explain the Maintenance of the Human body.
CO5	**BM-404.5**	Interpret the functioning of Special senses

Learning Outcomes

1.0 **Organization of the human body.**

- 1.1 Explain the human body organization.
- 1.2 List the planes of references.
- 1.3 Define the planes of reference : sagittal, frontal, transverse
- 1.4 Define the directional terms: superior, inferior, anterior, posterior, medial, lateral, internal,external, proximal, distal, pronation and supination.
- 1.5 Explain the structure of a cell
- 1.6 Explain the functions of the cell
- 1.7 Define resting potential.
- 1.8 Explain the constituents of blood and their normal ranges
- 1.9 Explain the significance of Blood Analysis

2.0 Apply the principles of support and movement on human body

- 2.1 State the functions of the skeletal system
- 2.2 Explain the structure of a skeleton.
- 2.3 Mention bones of the human body
- 2.4 List the types of bones with examples.
- 2.5 Classification of joints with examples
- 2.6 Explain possible movements at the different types of joints.
- 2.7 Name different joints of the body.
- 2.8 Apply different movements of joints on the human body.
- 2.9 List the functions of muscular system.
- 2.10 Explain the types of muscles.
- 2.11 Compare the types of muscles.
- 2.12 Explain the mechanism of muscular contraction.

3.0 Understand control systems of the human body

- 3.1 Explain the structure of a neuron.
- 3.2 Define action potential of a neuron.
- 3.3 Name the cable properties of the nerve.
- 3.4 Explain conduction of nerve impulses in unmyelinated and myelinated nerve fibers.
- 3.5 Explain synapse and neuromuscular junction.
- 3.6 Explain anatomy of the brain with liable diagram.
- 3.7 Name different lobes of the brain and state their functions.
- 3.8 Explain Electrical activity of the brain.

4.0 **Explain the maintenance of the human body**

4.1 Discuss the location of the heart.

4.2 Explain the structure of heart wall and it's layers, chambers and valves.

4.3 Explain various circulations: systemic, pulmonary, coronary and portal circulation.

4.4 List the functions of major blood vessels.

4.5 Explain the events in the cardiac cycle and calculate the heart rate for given cardiac cycle.

4.6 Explain electrical activity of the heart.

4.7 Explain conduction system of the heart and know suitable circulations in the conduction system of the heart.

4.8 Explain the structure and functions of respiratory System.

4.9 Explain the mechanism of breathing.

4.10 Define lung volumes and capacities.

4.11 Explain the functions of the digestive system: secretion, digestion and absorption.

4.12 Describe the structure of the digestive system.

4.13 Describe the functional anatomy of a kidney.

4.14 Explain the structure and functions of nephron.

4.15 Explain thestructure and functions of Urinary system.

5.0 Interpret the functioning of special senses

5.1 List the organs for special senses

5.2 List the accessory structures of the eye

5.3 Explain the accessory structures of the eye

5.4 Explain the structural components of the eye ball.

5.5 Define refraction, accommodation and constriction of the pupil.

5.6 Apply the above in image formation by the pupil.

5.7 Explain the processing of visual signals in the Retina and the neural pathway for vision.

5.8 Describe the anatomical structure of the Ear.

5.9 List the major events in the physiology of hearing.

5.10 Explain the physiology of equilibrium in Ear.

CO-PO/PSO MATRIX

CO No	PO1	PO2	PO3	PO4	PO5	PO6	PO7	PSO1	PSO2	PSO3
BM-404.1	3								1	2
BM-404.2	3	2							1	2

BM-404.3	3								1	2
BM-404.4	3	2	1	1			1		1	2
BM-404.5	3		1				1		1	2
Average	**3**	**2**	**1**	**1**			**1**		**1**	**2**

3=Strongly mapped 2=Moderately mapped 1=Slightly mapped

HYPONATED COURSE CONTENTS

1. **Organization of the human body:** Cellular level, tissue level, organ level, planes of reference, directional terms, cell Structure, organelles and functions. Blood composition and functions. Significance of blood analysis in medicine.

2. **Principles of support and movement:** Functions and structure of the skeletal system, types of bones, joints, and their classification, different joints of the body. Functions of muscular system, types of muscles and their comparison, mechanism of muscular contraction.

3. **Control system of the human body:** Structure and functions of neuron, action potential, conduction of nerve impulses, synapse and neuromuscular junction, structures and lobes of thebrain.

4. **Maintenance of the human body:** Structure and function of the heart, major blood vessels in system pulmonary and coronary circulation, cardiac cycle, electrical activity of the heart, organs of respiration and their function, mechanics of breathing, lung volumes and capacities. Functions of the digestive system. Functional anatomy of a kidney, structure and functions of nephron.

5. **Special Senses:** Organs for special senses, mechanism of vision andhearing.

REFERENCE BOOKS

1. Kent M. Van De Graaff ,Concepts of Human Anatomy and Physiology,Subsequent edition (December 4, 1998),William C Brown Pub.
2. Gerard J. Tortora,Principles of Anatomy and Physiology, 10th Edition,John Wiley & Sons.
3. Ross and Wilson Anatomy and Physiology in Health and Illness, International Edition,12th edition (1 May 2014), Elsevier Health – UK.
4. W.Gordon Sears (Author), Robert S. Winwood J. L. Smith,Sears,Anatomy and Physiology for Nurses and Students of Human Biology,6th edition (1 September 1985), Hodder Arnold.

MODEL BLUE PRINT

S. No	Unit Title	No. of periods	Weightage of marks	Marks wise Distribution of Weightage				Question wise Distribution of Weightage				COs Mapped
				R	U	Ap	An	R	U	Ap	An	
1.	Organization of the human body	10	11	3		8		1		1		CO1
2.	Principles of Support and Movement	15	17	6	3	8		2	1	1		CO2
3.	Control Systems of the Human Body	10	11	3		8		1		1		CO3
4.	Maintenance of the Human Body	30	17	9		8		3		1		CO4
5.	Interpret the functioning of Special senses	10	14	3	3	8		1	1	1		CO5
	HOTs question from Chapter 2/3		10				10				1	
	TOTAL	**75**	**80**	**24**	**06**	**40**	**10**	**8**	**2**	**5**	**1**	

Table specifying the scope of syllabus to be covered for Unit test-I & Unit Test-II

Unit Test	Learning outcomes to be covered
Unit Test-I	From 1.1 to 3.4
Unit Test-II	From 3.5 to 5.10

DBME UNIT TEST-I

MODEL QUESTION PAPER (C-20)

FOURTH SEMESTER
PHYSIOLOGICAL SYSTEMS ENGINEERING (BM-404)

Time: 90 Minutes Total Marks: 40

PART-A 16 Marks

***Instructions*:** (1) Answer **all** questions.
(2) First question carries four marks and each of rest carries **three** marks.
(3) Answer for Q.No.2 to 5 should be brief and straight to the point and shall not exceed ***five*** simple sentences.

1.	Define any four directional terms.	R	4M	CO1
2.	State functions of skeletal system.	U	3M	CO2
3	List the types of bones with examples	U	3M	CO2
4	Define action potential of a neuron	U	3M	CO3
5	Name the cable properties of a nerve.	U	3M	CO3

PART-B 3 x 8 = 24 marks

Answer either (A) or (B) from each questions from part-B
Each question carries eight marks

6	(A) Explain the significance of blood analysis OR (B) Explain the structure of cell.	U	8M	CO1
7.	(A) Explain the mechanism of muscle contraction. OR (B) Draw and explain the Structure of skeletal system.	U	8M	CO2

8.	(A) Explain the structure of neuron. OR (B) Explain the conduction of nerve impulses in unmylinated nerve fibers.	U	8M	CO3

BOARD DIPLOMA EXAMINATION, (C-20)
DBME- FOURTHSEMESTER EXAMINATION
PHYSIOLOGICAL SYSTEMS ENGINEERING (BM-404)

Time: 3Hours Total Marks: 80

PART- A10×3M=30M

Instructions: (1) Answer all questions
(2) Each question carries three marks
(3) Answers should be brief and straight to the point and shall not exceed five simple sentences.

1	Define sagittal frontal and transvers.	R	3M	CO1
2	State functions of skeletal system.	R	3M	CO2
3	List the bones with examples	U	3M	CO2
4	Write the comparison between types of muscles.	R	3M	CO3
5	Name the cable properties of nerve.	R	3M	CO3
6	List the functions of major blood vessels.	R	3M	CO4
7	Draw and label the structure of Nephron.	R	3M	CO4
8	Define Tidal volume and residual volume	R	3M	CO4
9	List the organs for special senses.	R	3M	CO5
10	Define refraction and accommodation.	R	3M	CO5

PART-B **5 x 8 = 40 marks**

Answer either (A) or (B) from each questions from part-B
Each question carries eight marks

11	(A) Explain the significance of blood analysis OR (B) Explain the structure of cell.	U	8M	CO1
12	(A) Explain the mechanism of muscle contraction.	U	8M	CO2

	OR			
	(B) Draw and explain the Structure of skeletal system.			
13	(A) Explain structure of neuron.			
	OR			
	(B) Explain electrical activity of brain.	U	8M	CO3
14	(A) Draw and explain the functional anatomy of a kidney			
	OR			
	(B) Explain the conduction system of the heart.	U	8M	CO4
15	(A) Explain the accessory structure of the eye.			
	OR	U	8M	CO5
	(B) Draw and explain the anatomical structure of the Ear.			

PART- C1×10M=10M

Instructions: (1) Answer the following question
(2) The question carries ten marks.
(3) Answers should be comprehensive and the criterion for valuation is the content but not the length of the answer.

16	"Smooth muscles are controlled by autonomic nervous system" is the statement true or false. If true justify your answer.	An	10M	CO2

BIOMEDICAL INSTRUMENTATION

Course code	Course title	Total no. of periods/Week	Total no. of periods	Marks for FA	Marks for SA
BM-405	**Biomedical Instrumentation**	5	75	20	80

S.NO	Unit Title	No. of Periods	COs Mapped
1.	Characteristics of biomedical Instrumentation	10	CO1
2.	Bio medical transducers	20	CO2
3.	Bio potential electrodes	15	CO3
4.	Amplifiers for biomedical applications	15	CO4
5.	Recorders and display devices for biomedical signals	15	CO5
	TOTAL	**75**	

Upon completion of the course the student shall be able to	
Course Objectives	1. Familiarize the students to the importance of fundamentals of medical instrumentation system. 2. Familiarize the students to various transducers used for the measurement of displacement, pressure, temperature in medical instruments. 3. Familiarize the students to various electrodes used to measure biological signals. 4. Familiarize the students to acquire knowledge in amplifiers and recorders used in medical instrumentation.

CO No		Course Outcome
CO1	**BM-405.1**	Explain the characteristics of bio-medical instrumentation system.
CO2	**BM-405.2**	Apply the various transducers used in medical equipment.
CO3	**BM-405.3**	Explain the various types of bio-potential electrodes

CO4	**BM-405.4**	Analyse the amplifiers used in medical equipment
CO5	**BM-405.5**	Obtain the biomedical signals using recorders and display devices.

Learning Outcomes

1.0 Understand the characteristics of bio-medical instrumentation

1.1 Explain general instrumentation system.
1.2 Explain the block diagram of medical instrumentation system.
1.3 Compare a general instrumentation system with a medical instrumentation system
1.4 Explain the constraints while measuring physiological variables
1.5 Define the general static characteristics of medical instruments : linearity, range, accuracy, precision, frequency response, stability, signal to noise ratio, hysteresis.
1.6 State physiological signals and their amplitude and frequency ranges.

Principles and applications of various transducers used in medicalequipment.

2.1 Define and classify transducers.
2.2 Explain the operating principles and applications of variable resistance transducers.
2.3 Explain constructional details and operating principles of bonded and unbonded strain gauges and mention the biomedical applications of strain gauges
2.4 Derive the gauge factor of strain gauge.
2.5 Explain the constructional details of variable inductance transducers.
2.6 Explain the operating principle and mention the applications of variable inductance transducers
2.7 Explain the constructional details and operating principles of an LVDT
2.8 State the need for a phase sensitive detector
2.9 Explain the constructional details, operating principle and applications of variable capacitance transducer.
2.10 Explain the constructional details and operating principle of piezoelectric transducerand its applications
2.11 List various transducers used in temperature measurement
2.12 State Seeback and Peltier effect
2.13 State the Principle of thermocouple and laws of thermo couple,
2.14 Give the resistance temperature relationship of a thermistor
2.15 State principle and applications of resistance thermometers
2.16 State the principle of optical transducers, Photo-diode, Photo-Multiplier tube, Photoconductive, Photo-voltaic and Photo-Emissive.

Operating principle and applications of bio-potential electrodes

3.1 State the need for a bio-potential electrode
3.2 Distinguish between electrode and transducer
3.3 Explain the electrode-electrolyte interface

3.4 Explain the electrode skin interface
3.5 Definition of half-cell potential and explain its measurement
3.6 List the values of half-cell potentials for various metals
3.7 Define Offset voltage and explain its minimization with Ag-Agcl electrodes
3.8 Explain equivalent circuit of a surface electrode in contact with skin
3.9 Classify the Bio-potential electrodes
3.10 Explain the types of body surface electrodes
3.11 Explain the various internal electrodes (needle & wire electrodes)
3.12 Explain the construction and applications of microelectrode

Principles and analysis of applications of amplifiers used in medical equipment

4.1 State requirements of a bio-potential amplifier
4.2 List the properties of an Ideal op-amp
4.3 Draw the circuit of op-amp differential amplifier and derivation of the expression for output voltage
4.4 Draw circuit diagram and explain the working of an instrumentation amplifier (three op-amp differential amplifier)
4.5 Draw Circuit diagram and explain working principle of carrier amplifier
4.6 Explain the working of a chopper amplifier with a circuit diagram
4.7 Explain working of Transformer, optical, and Capacitive-coupled isolation amplifiers.

Various recorders and display devices for biomedical signal

5.1 State the need for a recorder in a measurement system.
5.2 List the recorders based on the frequency response.
5.3 Explain the working principle of a galvanometric recorder.
5.4 Describe the working of an ink jet recorder.
5.5 Explain the principle of a thermal recorder.
5.6 List the applications of all the recorders.
5.7 Explain the significance of CRO in biomedical field.
5.8 Compare faded and non-faded displays

CO-PO/PSO MATRIX

CO No	PO1	PO2	PO3	PO4	PO5	PO6	PO7	PSO1	PSO2	PSO3
BM-405.1	3								1	
BM-405.2	3	1	2						1	
BM-405.3	3	1		1					1	
BM-405.4	3	1		1					1	
BM-405.5	3		2	1					1	
Average	**3**	**1**	**2**	**1**					**1**	

COURSE CONTENTS:

1.0 Introduction to biomedical instrumentation: Block diagram, general characteristics of medical instrumentation: linearity, range, accuracy, precision, frequency response, stability SNR and hysteresis. Comparison with general instrumentation system, important physiological signals amplitude and frequency ranges.

2.0 Biomedical transducers: Classification of transducers, principle of operation and applications of different types of transducers- variable resistance, variable inductance, variable capacitance, peizo-electric, thermistors, thermocouples, RTD, optical transducers.

3.0 Bio-potential electrodes: Electrolyte interface, electrode – skin interface, offset voltage and half-cell potential, equivalent circuit of an electrode principle of operation and applications of surface, needle, wire, and micro electrodes.

4.0 Amplifiers for biomedical applications: Operation & applications of operational amplifier, instrumentation amplifier, differential amplifier, carrier amplifier, chopper, isolation amplifiers.

5.0 Recorders & Display devices for biomedical signals: Operation & applications of galvanometric recorders, ink jet recorder, thermal array recorders. Significance of CRO, faded & non faded displays

REFERENCE BOOKS

1. Webster, Medical Instrumentation: Application and Design, 4th edition (3 February 2009), Wiley.
2. R.S.Khandpur, Handbook of Biomedical Instrumentation, 3rd Edition, McGraw Hill Education.
3. N. Mohan Murali, Biomedical Instrumentation Volume-I,O.U. Press.
4. R S Khandpur, Handbook of Analytical Instruments, Third edition, McGraw Hill Education.

MODEL BLUE PRINT

S. No	Unit Title	No. of periods	Weightage of marks	Marks wise Distribution of Weightage				Question wise Distribution of Weightage				COs Mapped
				R	U	Ap	An	R	U	Ap	An	
1	Characteristics of biomedical Instrumentation	10	14	3	8	3		1	1	1		CO1
2	Bio medical Transducers	15	17	3	8	6		1	1	2		CO2
3	Bio potential Electrodes	15	11	3	8			1	1			CO3
4	Amplifiers for biomedical applications	20	14	3	8	3		1	1	1		CO4
5	Recorders and display devices for biomedical signals	15	14	3	8	3		1	1	1		CO5
	HOTs question from 2/3/4 /5 Chapters		10				10				1	
	Total	**75**	**80**	**15**	**40**	**15**	**10**	**5**	**5**	**5**	**1**	

Table specifying the scope of syllabus to be covered for Unit test-I & Unit Test-II

Unit Test	Learning outcomes to be covered
Unit Test-I	From 1.1 to 3.6
Unit Test-II	From 3.6 to 5.8

DBME UNIT TEST-I
MODEL QUESTION PAPER (C-20)
FOURTH SEMESTER
BIOMEDICAL INSTRUMENTATION (BM-405)

Time: 90 Minutes Total Marks: 40

PART-A 16 Marks

***Instructions*:** (1) Answer **all** questions.
(2) First question carries four marks and each of rest carries **three** marks.
(3) Answer for Q.No.2 to 5 should be brief and straight to the point and shall not exceed ***five*** simple sentences.

1.	a. Frequency of ECG signal ---------- b. EEG is the recording of electrical activity of muscles (State True/False). c. What is Transducer? d. ECG calibration signal amplitude is----------	R	4M	CO1
2.	State the principle of Thermocouple.	U	3M	CO2
3	Define half-cell potential.	U	3M	CO3
4	Write the applications of strain gauge transducers.	U	3M	CO2
5	State the need of a phase sensitive Detector	R	3M	CO2

PART-B 3 x 8 = 24 marks

Answer either (A) or (B) from each questions from part-B

Each question carries eight marks

6	(A) Explain the block diagram of general instrumentation system. (OR) (B) Explain the block diagram of medical instrumentation system.	U	8M	CO1
7.	(A) Explain the working principle of variable resistance transducer. (OR) (B) Explain the laws of thermo couple	U	8M	CO2
8.	(A) Explain the electrode- skin interface (OR)	U	8M	CO3

(B) Explain the electrode-electrolyte interface

BOARD DIPLOMA EXAMINATION, (C-20)
DBME- FOURTHSEMESTER EXAMINATION
BIOMEDICAL INSTRUMENTION (BM-405)

Time: 3Hours Total Marks: 80

PART- A10×3M=30M

Instructions: (1) Answer all questions
(2) Each question carries ***three*** marks
(3) Answers should be brief and straight to the point and shall not exceed five simple sentences.

1.	State physiological signals and their amplitude and frequency ranges.	R	3M	CO1
2.	Define static characteristics of medical instruments like linearity, range.	R	3M	CO1
3	List various transducers used in temperature measurement.	R	3M	CO2
	Define and classify transducers.	R	3M	CO2
5	State the principle of thermocouple.	U	3M	CO2
6	Distinguish between electrode and transducer	U	3M	CO3
7	State requirements of a bio-potential amplifier.	U	3M	CO3
8	List properties of ideal op amp	R	3M	CO4
9	State the need for a recorder in a measurement system	U	3M	CO5
10	Compare faded and non-faded displays.	R	3M	CO5

PART-B 5 x 8 = 40 marks

Answer either (A) or (B) from each questions from part-B
Each question carries ***eight*** *marks*

11	(A) Explain the general instrumentation system. (OR) (B) Explain the constraints while measuring physiological variables.	U	8M	CO1
12	(A) Explain the constructional details and operating principle of an LVDT (OR)	U	8M	CO2

(B) Explain the constructional details and operating principle of piezoelectric transducers and their applications.

13	(A) Explain Equivalent circuit of a surface electrode in contact with skin (OR) (B) Explain the various internal electrodes (needle & wire electrodes)	U	8M	CO3
14	(A) Explain the working of a non-mechanical chopper amplifier with a circuit diagram. (OR) (B) Draw the circuit of op-amp differential amplifier and derive expression for output voltage.	U	8M	CO4
15	(A) Explain the working principle of a galvanometric recorder (OR (B) Explain the significance of CRO in biomedical field.	U	8M	CO5

PART- C 1×10M=10M

Instructions: (1) Answer the following question
(2)The question carries ***ten*** marks.
(3) Answers should be comprehensive and the criterion for valuation is the content but not the length of the answer.

16	Which displacement sensor is used to measure both displacement and direction and how it is achieved?	An	10M	CO4

ANALYTICAL INSTRUMENTATION ENGINEERING

Course code	Course title	Total no. of periods/week	Total no. of periods	Marks for FA	Marks for SA
BM-406	**ANALYTICAL INSTRUMENTATION ENGINEERING**	**6**	**90**	**20**	**80**

S.NO.	Unit Title	No. of Periods	COs Mapped
1	Introduction to analytical Instrumentation	15	CO1
2	Comprehend theconcept of colorimeter & spectrophotometer	20	CO2
3	Comprehend the concept of Flame photometer, Chromatograph, Electrophoresis	10	CO3
4	Introduction to radio chemical and biochemical instruments	30	CO4
5	Comprehend the principles of conductivity meter, pH meter, and blood gas analyser	15	CO5
	TOTAL	**90**	

Upon completion of the course the student shall be able to		
Course Objectives		1.Student will familiarize with the knowledge of analytical instrumentation and Spectrophotometer, colorimeter, Flame photometer, Electrophoresis, Chromatography, radio chemical and biochemical instruments, conductivity meter, pH meter, and Blood gas analyzer

CO No		Course Outcome
CO1	**BM-406.1**	Mention the types of Visible, UV and IR light sources and detectors
CO2	**BM-406.2**	Explain the working principle of colorimeter and spectrophotometer
CO3	**BM-406.3**	Describe the flame photometer, Chromatograph and Electrophoresis
CO4	**BM-406.4**	Explain the working principle of radio chemical and biochemical instruments

CO5	**BM-406.5**	Analyse the working of conductivity meter and PH meter and bloodgas analyzer.

Learning Outcomes

1.0 Understand the analytical instrumentation

1.1. Draw and explain block diagram of analytic instrumentation.
1.2 Explain the use of personal computers in analytical instruments
1.3 Draw and explain Electromagnetic spectrum.
1.4 Explain Beer Lamberts law.
1.5 Explain Monochromator (Prism and Grating)
1.6 List the different types of Visible, UV and IR light sources.
1.7 List the different types of Visible, UV and IR light detectors
1.8 Explain the principle of operation, description and applications of the following:
a) Single beam Visible/ U. V Spectrophotometer
b) IR Spectrophotometer.

2.0 Analyze the concept of Colorimeter &Spectrophotometer

2.1 Explain the working principle of colorimeter.
2.2 Explain the basic principle of spectrophotometer
2.3 Explain the basic components of double beam photometer
2.4 Compare radiation energy from a color filter and monochromator
2.5 Explain the working principle of direct reading colorimeter and spectrophotometer
2.6 Explain the block diagram of microprocessor control-based spectrophotometer
2.7 State the need of digital spectroscopy
2.8 List the sources of error in spectrophotometric measurements
2.9 Need for calibration in spectrophotometer

3.0 Analyze the concept of Flame photometer, Chromatograph, Electrophoresis.

3.1. State the principle of flame photometry.
3.2. Explain the constructional details of flame photometer.
3.3. Explain the block diagram of flame photometer.
3.4. Explain the interferences in flame photometry.
3.5. Explain measurement of fluorescence.
3.6. Explain block diagram of typical fluorimeter.
3.7. Explain the basic principle of chromatography & different types.
3.8. Explain Block diagram of a gas chromatograph.
3.9. Explain the methods of measurement of peak areas.
3.10. Explain theblock diagram of liquid chromatograph.
3.11. Explain the Principle and different techniques of electrophoresis.
3.12. Explain the complete electrophoresis apparatus.
3.13. State the need of densitometer in electrophoresis.
3.14. Apply Microprocessors in densitometer.

4.0 Understand Radio chemical and Biochemical instruments

4.1 Know the fundamentals of radiochemical instruments
4.2 State the principle of radiation detectors.
4.3 Explain block diagram of a pulse height analyzer.
4.4 State the principle of X-ray spectrometers.
4.5 Explain the block diagram of X-ray spectrometer.
4.6 Explain the principle of automated biochemical analysis system.
4.7 List the component steps in automated system.
4.8 Explain the schematic diagram of a continuous flow system.
4.9 Explain system components.
4.10 Analyze and know the applications of automated biochemical analysis system.

5.0 Understand the principles of Conductivity meter, pH meter, and Blood gas analyzer

5.1 Explain the principle of measurement of conductance**.**
5.2 Explain conductivity meter with block diagram**.**
5.3 Define pH
5.4 Explain the principle of pH measurement
5.5 Explain the different electrodes for pH measurement
5.6 Explain the working principle of pH meter with block diagram**,**
5.7 Explain Digital p H meter with block diagram**,**
5.8 Explain the principle of Biosensors**,**
5.9 Explain the blood gas analyzer with block diagram.
5.10 Explain catheter tip electrode for measurement of pO2 and pCO2.
5.11 Explain the complete blood gas analyzer with block diagram

CO-PO/PSO MATRIX

CO No	PO1	PO2	PO3	PO4	PO5	PO6	PO7	PSO1	PSO2
BM-406.1	3								2
BM-406.2	3	1	2						2
BM-406.3	3	1							2
BM-406.4	3			1					2
BM-406.5	3		2	1					2
Average	**3**	**1**	**2**	**1**					**2**

3=Strongly mapped **2=Moderately mapped** **1=Slightly mapped**

HYPONATED COURSE CONTENTS

1.0 Introduction to analytical instrumentation: Block diagram of analytical instrumentation, electromagnetic spectrum beer lambert's law, Monochromator, different types of visible, UV, IR light detectors, U.V Spectrophotometer meter

2.0 Comprehend the concept of colorimeter & spectrophotometer: principle of colorimeter, single beam & double beam photometer, spectrophotometer, colour filter and Monochromator, Null-type spectrophotometer, direct reading spectro-colorimeters/spectrophotometers

3.0 Comprehend the concept of Flame photometer, Chromatograph, Electrophoresis: principle of flame photometry, interferences in flame photometry, Measurement of fluorescence, fluorimeter, gas chromatograph, liquid chromatography, complete electrophoresis, densitometer

4.0 Introduction to radio chemical and biochemical instruments : Fundamentals of radiochemical instruments, radiation detectors, pulse height analyzer, X-ray spectrometers, automated biochemical analysis system, applications of automated biochemical analysis system

5.0 Comprehend the principles of conductivity meter, p H meter , and Blood gas analyzer : Principle of measurement of conductance, conductivity meter, p H measurement , p H meter, Null –detector type p H meter, Chopper amplifier type p H meter, digital p H meter, Biosensors, blood gas analyzer

REFERENCE BOOKS.

1. Webster, Medical Instrumentation: Application and Design, 4th edition (3 February 2009),

Wiley.

2. R.S.Khandpur, Handbook of Biomedical Instrumentation, 3rd Edition, McGraw Hill Education.

3. N. Mohan Murali, Biomedical Instrumentation Volume-I,O.U. Press.

4. R S Khandpur, Handbook of Analytical Instruments, Third edition, McGraw Hill Education.

MODEL BLUE PRINT

S. No.	Major Topics	No. of periods	Weightage of marks	Marks wise Distribution of Weightage				Question wise Distribution of Weightage				COs Mapped
				R	U	Ap	An	R	U	Ap	An	
1	Introduction to analytical Instrumentation	15	14	3	3	8		1	1	1		CO1
2	Comprehend the concept of colorimeter & spectrophotometer	20	14	6		8		2		1		CO2
3	Comprehend the concept of Flame photometer, Chromatograph, Electrophoresis	20	24	6		8	10	2		1	1	CO3
4	Introduction to radio chemical and biochemical instruments	15	14	3	3	8		1	1	1		CO4
5	Comprehend the principles of conductivity meter, p H meter , and Blood gas analyzer	20	14	6		8		2		1		CO5,
	HOTs question from Chapter 3											
	Total	**90**	**80**	**24**	**6**	**40**	**10**	**8**	**2**	**5**	**1**	

Table specifying the scope of syllabus to be covered for Unit test-I & Unit Test-II

Unit Test	Learning outcomes to be covered
Unit Test-I	From 1.1 to 3.7

Unit Test-II	From 3.8 to 5.11

DBME UNIT TEST-I

MODEL QUESTION PAPER (C-20)

ANALYTICAL INSTRUMENTION ENGINEERING (BM-406)

Time: 90 Minutes Total Marks: 40

PART-A 16 Marks

Instructions: (1) Answer **all** questions.

(2) First question carries four marks and each of rest carries **three** marks.

(3) Answer for Q.No.2 to 5 should be brief and straight to the point and shall not exceed ***five*** simple sentences.

1.	Name any four different types of UV light sources.	R	4M	CO1
2.	State Beer Lamberts law.	U	3M	CO1
3	Compare radiation energy from a color filter and monochromator.	U	3M	CO2
4	State the Need of digital spectroscopy	U	3M	CO2
5	State the principle of flame photometry.	U	3M	CO3

PART-B 3 x 8 = 24 marks

Answer either (A) or (B) from each questions from part-B

Each question carries eight marks

6	(A) Explain the use of personal computers in analytical instruments. OR (B) Explain Monochromator (Prism and Grating)	U	8M	CO1
7.	(A) Explain the block diagram of microprocessor control based Spectrophotometer OR (B) Explain the working principle of direct reading colorimeter.	U	8M	CO2
8.	(A) Explain the block diagram of a typical fluorimeter. OR (B) Explain the interferences in flame photometry.	U	8M	CO3

BOARD DIPLOMA EXAMINATION, (C-20)
DBME- FOURTHSEMESTER EXAMINATION
ANALYTICAL INSTRUMENTION ENGINEERING (BM-406)

Time: 3Hours Total Marks: 80

PART- A10×3M=30M

Instructions: (1) Answer all questions
(2) Each question carries three marks
(3) Answers should be brief and straight to the point and shall not exceed five simple sentences.

1.	List the different types of Visible, UV and IR light sources.	R	3M	CO1
2.	State Beer Lamberts law.	R	3M	CO1
3	Compare radiation energy from a color filter and monochromator.	U	3M	CO2
4	State the Need of digital spectroscopy	R	3M	CO2
5	State the Need of densitometer in electrophoresis	R	3M	CO2
6	List the interferences in flame photometry	R	3M	CO3
7	Write the fundamentals of radiochemical instruments	R	3M	CO4
8	List the component steps in automated system	R	3M	CO4
9	Define pH	R	3M	CO5
10	State the principle of biosensors	R	3M	CO5

PART-B 5 x 8 =40 marks

Answer either (A) or (B) from each questions from part-B

Each question carries eight marks

11	(A) Explain the use of personal computers in analytical instruments. OR (B) Explain Monochromator (Prism and Grating)	U	8M	CO1
12	(A) Explain the block diagram of microprocessor control based	U	8M	CO2

Spectrophotometer

OR

(B) Explain the working principle of direct reading colorimeter.

13	(A) Explain Block diagram of a gas chromatograph. OR (B) Explain Block diagram of liquid chromatograph.	U	8M	CO3
14	(A) Explain Block diagram of a pulse height analyser OR (B) Explain the schematic diagram of a continuous flow system.	U	8M	CO4
15	(A) Explain working principle of pH meter with block diagram OR (B) Explain catheter tip electrode for measurement of pO2 and pCO2	U	8M	CO5

PART- C 1×10M=10M

Instructions: (1) Answer the following question
(2) The question carries ten marks.
(3) Answers should be comprehensive and the criterion for valuation is the content but not the length of the answer.

16	Is gas tight syringe method suitable to inject samples into the column in gas chromatography and how? If not what alternative methods are used and how?	An	10M	CO3

LINEAR INTEGRATED CIRCUITS APPLICATIONS LAB PRACTICE

Course Code	Course title	No. of periods/week	Total no. of periods	Marks for FA	Marks for SA
BM-407	Linear Integrated Circuits Applications Lab Practice	3	45	40	60

Sl. No.	Chapter/ Unit Title	No. of Periods	COs Mapped
1	Special semiconductor devices	08	CO1
2	Oscillators	10	CO2
3	Operational Amplifier Circuits	10	CO3
4	A/D and D/A Convertors	07	CO4
5	PSpice/Proteus simulation	10	CO5
	Total	**45**	

CO No		Course Outcome
CO1	**BM-407.1**	Obtain V-I characteristics of special semiconductor devices.
CO2	**BM-407.2**	Construct Oscillators to obtain output waveform and calculate output frequency.
CO3	**BM-407.3**	Construct the circuits using OP-AMP and observe the waveforms.

CO4	**BM-407.4**	Construct A/D and D/A convertors and observe the output.
CO5	**BM-407.5**	Simulate various electronic circuits using P-spice or equivalent software.

LEARNING OUTCOMES:

1. Special semiconductor devices

1.1 Obtain V-I characteristics of UJT.

1.2 Obtain V-I characteristics of SCR.

1.3 Obtain V-I characteristics of Tunnel Diode Oscillator.

2. Oscillators

2.1 Implement RC Phase shift oscillator and verify the effect of varying the RC component values and observe output wave forms on CRO

2.2 Colpitt's Oscillator - Calculate the frequency of oscillations and compare with the theoretical values.

Course Objectives	1. To study the V-I characteristics of special semiconductor devices
	2.. To construct wave different oscillators and observe waveforms.
	3. To construct various circuits using Operational Amplifiers
	4. To construct A/D and D/A convertors
	5. To simulate various electronic circuits using simulation software.

2.3 Hartley Oscillator - Calculate the frequency of oscillations and compare with the theoretical values.

2.4 RC - Phase Shift oscillator - Calculate the frequency of oscillations and compare withthetheoretical values.

2.5 Wein-Bridge Oscillator - Calculate the frequency of oscillations and compare with the theoretical values.

2.6 UJT Relaxation oscillator- observe frequency response.

3. **Operational Amplifier Circuits**

3.1 Verify the output of summing amplifier using operational amplifier.

3.2 Verify the output of difference amplifier using operational amplifier.

3.3 Verify the output of differentiator circuit for different time constants and draw its output waveforms using op-amp.

3.4 the output of integrator circuit for different time constants and draw its output waveforms using op-amp.

3.5 Verify the output of comparator using op-amp.

3.6 Verify the operation of voltage to current converter using op-amp.

3.7 Verify the operation of current to voltage converter using op-amp.

4. A/D and D/A Convertors

4.1 Construction of A/D convertor.
4.2 Construction of D/A convertor.

5. PSpice simulation

5.1 Representation of passive elements
5.2 Representation of active elements
5.3 Representation of time varying signals
5.4 Representation of nodes
5.5 Zener regulator
5.6 Half wave rectifier
5.7 BJT model description
5.8 BJT I/V characteristics
5.9 Simulation of CE amplifier
5.10 Simulation of RC Coupled amplifier
5.11 Simulation of integrator
5.12 Simulation of differentiator

CO-PO/PSO MATRIX

CO No	PO1	PO2	PO3	PO4	PO5	PO6	PO7	PSO1	PSO2	PSO3
BM-407.1	3							1		
BM-407.2	3	2						2		
BM-407.3	3	2						2		
BM-407.4	1	2	1					3		
BM-407.5	2	2	1				1	2		
Average	**2.4**	**2**	**1**				**1**	**2**		

3=Strongly mapped 2=Moderately mapped 1=Slightly mapped

Communication Skills

Course Code	Course Title	No. of Periods/Week	Total No. of Periods	Marksfor FA	Marks for SA
BM-408	Communication Skills	3	45	40	60

S. No.	Unit Title	No of Periods	COs Mapped
1	Listening Skills	6	CO1
2	Introducing Oneself	3	CO1, CO2, CO3
3	Short Presentation (JAM)	6	CO1, CO2, CO3
4	Group Discussion	6	CO1, CO2, CO3
5	Preparing Resume with Cover Letter	3	CO3
6	Interview Skills	9	CO1, CO2, CO3
7	Presentation Skills	9	CO1, CO2

8	Work place Etiquette	3	CO1, CO2
Total Periods		**45**	

Course Objectives	To comprehend the features of communication needed for professional success and display the use of these competently
	To present ideas, opinions in group discussions and presentations on topics of general and technical interest
	To prepare for job selection processes

CO No.	Course Outcomes
CO1	Interacts in academic and social situations by comprehending what is listened to when others speak.
CO2	Demonstrates effective English communication skills while presenting ideas, opinions in group discussions and presentations on topics of general and technical interest
CO3	Exhibits workplace etiquette relevant in classroom situations for easy adaptation in professional setting in the future

CO-PO Matrix

Course Code BM-408	**Course Title: English Number of Course Outcomes: 4**				**No. of Periods: 45**
POs	Mapped with CO No.	CO Periods Addressing PO in Column 1		Level of Mapping (1,2,3)	Remarks
		Number	Percentage %		
PO1		Not directly applicable for Communication Skills Course however interactive activities that use content from science and technology relevant to the Programme taken up by the student shall be exploited for communication in the Course.			
PO2					
PO3					
PO4					
PO5	CO1, CO2, CO3	11	25%		>60%: Level 3 16 -59%: Level 2 Up to 15%: Level 1
PO6	CO1, CO2, CO3	27	60%		
PO7	CO1, CO2, CO3	7	15%		

Level 3 – Strongly Mapped
Level 2- Moderately Mapped
Level 1- Slightly Mapped

Mapping Course Outcomes with Program Outcomes:

CO	PO 1	PO 2	PO 3	PO 4	PO 5	PO 6	PO 7
CO 1					✓	✓	✓
CO 2					✓	✓	✓
CO3					✓	✓	✓

Blue Print for evaluation based on Course Outcomes for SA:
Note: Every Question based on CO has to be given marks for the following parameters of communication in the rubric.

- Fluency and Coherence
- Lexical Resource (Vocabulary)
- Grammatical Range and Accuracy

***Rubric Descriptors 'Good/ Competent / Fair /Poor' for Communication**

LEVEL OF COMPETENCE	Fluency and Coherence	Lexical Resource (Vocabulary)	Grammatical Range and Accuracy
GOOD (9-10*)	Speaks at length without noticeable effort or loss of coherence. May demonstrate language-related hesitation at times, or some repetition and/or self-correction.	Uses vocabulary resources flexibly during discussion. Uses paraphrase effectively.	Uses a range of complex structures with some flexibility.
	Uses a range of connectives and discourse markers with some flexibility. **Articulates and adapts to near naturalization.**	Uses some less common vocabulary and shows some awareness of style and collocation	Mostly produces error-free sentences.
COMPETENT (6-8)	Is willing to speak at length, though may lose coherence at times due to occasional repetition, self-correction or hesitation.	Has enough vocabulary to discuss topics and make meaning clear in spite of inappropriacies.	Uses a mix of simple and complex structures, but with limited flexibility.
	Uses a range of connectives and discourse markers but not always appropriately.	Generally paraphrases successfully	May make mistakes with complex structures though these rarely cause comprehension problems.
FAIR (3-5)	Tries to maintain a flow of speech but t uses repetition, self correction and/or slow speech to keep going.	Manages to talk about familiar and unfamiliar topics but uses vocabulary with limited flexibility.	Produces only basic sentence forms, however, errors persist.

	Produces simple speech fluently, but more complex communication causes fluency problems.	Attempts to use paraphrase but with mixed success.	Uses a limited range of more complex structures, but these usually contain errors and may cause some comprehension problems
POOR (0 *-2)	Speaks with long pauses. Pauses lengthy before most words. **Merely imitates**	Uses simple vocabulary to convey personal information	Attempts basic sentence forms but with limited success, or relies on apparently memorized utterances
	Has limited ability to link simple sentences	Has insufficient vocabulary for less familiar topics	Makes numerous errors except in memorized expressions
	Gives only simple responses and is frequently unable to convey basic message	Only produces isolated words or memorized utterances	Struggles to produce basic sentence forms

s*10 marks to be awarded only if competence level shows flawless expertise in English.

***0 marks to be awarded when student shows incoherence and gives irrelevant responses.**

Blue Print for evaluation based on Course Outcomes for SA of each student:

Note: Marks are awarded for each student as per the Rubric descriptors.

S. No.	Questions based on Course Outcomes	Periods Allocated for practical work	Marks Wise Distribution of Weightage	Marks allotment for each Student in the Rubric*				Mapping of COs
				Poor 0-2	Fair 3-5	Competent 6-8	Good 9-10	
1	Describe the given object in a minute	6	10					CO 2
2	Exchange ideas/ views in a group discussion on _____ issue (academic, technical or social)	6	10					CO1, CO 2
3	Present your ideas /opinions on the given issue/ topic (individual to an audience)	9	10					CO1, CO2, CO 3
4	Role play an imaginary work-place situation	6	10					CO1, CO2, CO 3

5	Individual interaction with the Examiner duly submitting Resume (Facing the Interview) – Introducing oneself and answering questions	12	10					CO1, CO2, CO 3
6	*Listen to and comprehend any audio communication/ content	6	10					CO1, CO2, CO 3
TOTAL		**45**	**60**					

***Listen to and comprehend the given audio content**: Giving the Students time to read the questions (Fill in the Blanks, Select from Alternatives, True or False, Table fill, etc.) in chunks before listening to audio inputs also played in chunks.

Blue Print for evaluation based on Course Outcomes for Formative Assessment:

Note: Every Question based on CO has to be given marks for the following parameters in the rubric.

- Fluency and Coherence
- Lexical Resource
- Grammatical Range and Accuracy

S. No.	Questions based on Course Outcomes	Periods Allocated for practical work	Marks Wise Distribution of Weightage	Marks allotment for each Student in the Rubric*				Mapping of COs
				Poor 0-2	Fair 3-5	Competent 6-8	Good 9-10	
Formative Assessment - 1								
1	Describe the given object in a minute	3	10					CO 2
2	Exchange ideas/ views in a group discussion on _____ issue (academic, technical or social)	6	10					CO1, CO 2

3	Present your ideas /opinions on the given issue/ topic (individual to an audience)	6	10					CO1, CO2, CO 3
4	*Listen to and comprehend any audio communication/ content	3	10					CO1, CO2, CO 3
Total		**18**	**40**					
Formative Assessment -2								
1	Present your ideas /opinions on the given issue/ topic (individual to an audience)	3	10					
2	Role play an imaginary work-place situation	6	10					CO1, CO2, CO 3
3	Individual interaction with the Examiner duly submitting Resume (Facing the Interview) – Introducing oneself and answering questions	15	10					CO1, CO2, CO 3
4	*Listen to and comprehend any audio communication/ content	3	10					CO1, CO2, CO 3
TOTAL		**27**	**40**					

Learning Outcomes

1. **Listening Skills:**
    - 1.1 Listen to audio content (dialogues, interactions, speeches, short presentations) and answer questions based on them
    - 1.2 Infer meanings of words / phrases / sentences / after listening to audio content as mentioned above.

2. **Introducing Oneself:**
    - 2.1 Prepare a grid different aspects for presentation about a person / oneself
    - 2.2 Present a 1 or 2 minute introduction of oneself for an audience.

3. **Short Presentation:**
    - 3.1 Define an object
    - 3.2 Describe an object, phenomenon, event, people
    - 3.3 Speak on a topic randomly chosen.

4. **Group Discussion:**
    - 4.1 Practice Group Discussion. Techniques
    - 4.2 Participate in group discussions.

5. **Resume Writing and Cover Letter:**
    - 5.1 Prepare resumes of different sorts – one's own and others.
    - 5.2 Write an effective cover letter that goes with a resume.

6. **Interview Skills:**
    - 6.1 Prepare a good Curriculum Vitae
    - 6.2 Exhibit acceptable (Greeting, Thanking, Answering questions with confidence)

7. **Presentation Skills:**
    - 7.1 Prepare Posters, Charts, PPT's on issue of general and technical interest
    - 7.2 Present one's ideas before an audience with confidence using audio visual aids and answer questions that are raised.

8. **Workplace Etiquette:**
    - 8.1 Show positive attitude & adaptability / appropriate body language to suit the work place
    - 8.2 Display basic of etiquette like politeness, good manners.

COMMUNICATION& DATA TRANSMISSION LAB PRACTICE

Course Code	Course title	No. of periods/week	Total no. of periods	Marks for FA	Marks for SA
BM-409	**Communication& Data Transmission Lab Practice**	3	45	40	60

S. No.	Chapter/ Unit Title	No. of Periods	COs Mapped

1	Analog Modulation and demodulation methods	14	CO1
2	Digital modulation and Demodulation methods	17	CO3
3	Transmitters and Receivers	8	CO4
5	Multiplexing Techniques	6	CO5
	TOTAL	**45**	

Course Objectives	1. To familiarize the concepts of analog communication systems and digital communication systems
	2. To learn the practical importance and applications of communication systems
	3.To equip with various issues related to analog and digital communications such as modulation, demodulation, transmitters, receivers and noise performance

CO No		**Course Outcome**
CO1	**BM-409.1**	Perform analog modulation techniques, AM and FM.
CO2	**BM-409.2**	Develop various digital modulation and demodulation methods.
CO3	**BM-409.3**	Demonstrate the principles and working of transmitters and receivers.
CO4	**BM-409.4**	Demonstrate the principle of multiplexing technique.

LEARNING OUTCOMES:

1. Analog Modulation and Demodulation

1.1 Simple method generation of AM and detection

a) observing carrier and modulating signals
b) observing circuit components
c) observing AM modulated signal
d) observing demodulated circuit
e) observing output of demodulated circuit

f)observing the different sections in the circuit

1.2 Simple method generation of FM and detection

a) Measuring the amplitude and frequency of carrier and modulating signals
b) Observing the frequency deviation
c) Observing different blocks of FM modulator/demodulator.
d) Observing demodulated signal and comparing with original modulation signal.

1.3 Generation of DSBSC/SSB and detection

a) observing suppression of carrier
b) observing one side band (after suppression of carrier)
c) observing the balanced modulator circuit.
d) Observing the demodulated circuit and its output.

2. DIGITAL MODULATION

a. Generation and detection of PAM

a) To understand the process of PAM
b) To observe the parameters of pulse wave form, input sinusoidal wave form & PAM.
c) To observe the waveforms on CRO.
d) To demodulate PAM signal and to recover original signal.

b. Pulse code modulation and Demodulation.

a) To understand the process of PCM
b) To know the process of Quantization by experimental verification
c) To observe the input and output waveforms on CRO.
d) Observing the effect of quantization on CRO.
e) To identify different sections in PCM decoder.

c. Pulse width modulation and Demodulation

a) To understand the process of PWM
b) To know the process of PWM through experiment
c) To PW modulate input signal
d) To demodulate the PWM signal and recover the modulating signal
e) To identify the various sections in the circuit

d. Generation and detection of FSK

a) To know the process of FSK by experiment
b) To transmit data using FSK
c) To identify various sections in the circuit

e. Generation and detection of PSK

a) To know the process of PSK by experiment
b) To transmit data using PSK
c) To identify various sections in the circuit

f. Generation and detection of DPSK

a) To identify various components in BPSK modulator

g. Generation and detection of QPSK

a) To identify various components in QPSK circuit

3. Transmitters and Receivers

a. To study AM transmitter and Receiver

a) To identify the various blocks in transmitter and receiver

b. To study FM transmitter and Receiver.

a) To identify the various blocks in transmitter and receiver

c. To identify various components in DBPSK transmitter

d. To identify various components in DBPSK receiver

4. Time Division Multiplexing

4.1. Study the TDM and observe the output waveform

a) Study the process of TDM by experiment
b) To transmit 4 signals of sinewave 250Hz, 500Hz,1KHz,2KHz using TDM
c) To identify various sections in TDM
d) Demultiplex TDM signal and observe the waveform

4.2. Observe the effect of noise on analog system

a) Calculate noise figure

CO-PO/PSO MATRIX

CO No	PO1	PO2	PO3	PO4	PO5	PO6	PO7	PSO1	PSO2	PSO3
BM-409.1	3	2						2		
BM-409.2	2	2	1	1			1	3		
BM-409.3	3							2		
BM-409.4	3		1					2		
Average	**2.75**	**2**	**1**	**1**			**1**	**2.25**		

3=Strongly mapped 2=Moderately mapped 1=Slightly mapped

BIOMEDICAL INSTRUMENTATION & ANALYTICAL INSTRUMENTATION LAB

Course code	Course title	No. of periods/week	Total no. of periods	Marks for FA	Marks for SA
BM-410	Biomedical Instrumentation & Analytical Instrumentation LAB	4	60	40	60

SI.NO.	Major Topics	No. of Periods	COs Mapped
1	OPERATIONS OF TRNSDUCER	20	CO1
2	OPERATION S OF ANANLYTICAL DEVICE	40	CO2,CO3
	TOTAL	**60**	

Course Objectives	To familiarize the practical knowledge on various types of transducers and analytical devices.

CO No		Course Outcome
CO1	**BM-410.1**	Experiment on various types of transducers.
CO2	**BM-410.2**	Use of electrodes, ECG machine, Bed side monitor.
CO3	**BM-410.3**	Use of densitometers, conductivity meter, pH meter, automated Biochemistry analyser, spectrophotometer and colorimeter

Learning Outcomes

1.0 Study and operation of the following transducers:

A. Thermistor, thermocouple and RTD
B. Strain gauge
C. LVDT
D. Potentiometric transducer
E. Capacitive transducer
F. Piezoelectric transducer
G. Photoelectric transducer

2. a)Measurement of half-cell potential and off set potential using electrodes
b) Identify various controls and demonstration of ECG machine and Bed side monitor

3 .Analytical instrumentation systems

A. Study and operation of pH meter
B. Study and operation of colorimeter

C. Study and operation of Spectrophotometer
D. Study and operation of automated Biochemistry analyser
E. End point method of estimating blood constituents using automated Biochemistry analyser
F. Fixed point method of estimating blood constituents using biochemistry analyser
G. Kinetic method of estimating blood constituents using Biochemistry Analyzer
H. Study and operation of conductivity meter
I. Study and operation of Densitometer

CO-PO/PSO MATRIX

CO No	PO1	PO2	PO3	PO4	PO5	PO6	PO7	PSO1	PSO2	PSO3
BM-410.1	3		2	2	1				2	3
BM-410.2	3	1	2	2	2				2	3
BM-410.3	3	1	2	2	3				2	3
Average	**3**	**1**	**2**	**2**	**2**				**2**	**3**

3=Strongly mapped **2=Moderately mapped** **1=Slightly mapped**

V SEMESTER

5TH Semester

Subject Code	Name of the Subject	Instruction period / week		Total Period /Sem	Scheme of Examination			
		Theory	Practical/Tutorial		Duration (hours)	Sessional Marks	End Exam Marks	Total Marks
THEORY								
BM-501	Computer Networks	5	-	75	3	20	80	100

BM-502	Measurement & Test Equipment	5	-	75	3	20	80	100
BM-503	Microprocessors	5	-	75	3	20	80	100
BM-504	Bio-Medical Equipment	5	-	75	3	20	80	100
BM-505	Medical Implants Engineering	5	-	75	3	20	80	100
BM-506	Medical Informatics & Telemedicine	5	-	75	3	20	80	100
PRACTICAL								
BM-507	Measurement & Test Equipment Lab Practice	-	3	45	3	40	60	100
BM-508	Life Skills	-	3	45	3	40	60	100
BM-509	Computer Hardware & Networking Lab Practice	-	3	45	3	40	60	100
BM-510	Microprocessors lab practice	-	3	45	3	40	60	100
TOTAL		**30**	**12**	**630**	**-**	**280**	**720**	**1000**

COMPUTER NETWORKS

Course code	Course title	no. of periods/week	Total no. of periods	Marks for FA	Marks for SA
BM-501	**Computer networks**	5	75	20	80

S.NO.	Major Topics	No. of Periods	COs Mapped
1.	Computer Hardware	13	CO1
2.	Networking components, Topologies & Network models	18	CO2
3.	Data link Layer and MAC Sublayer	18	CO3
4.	Network and Transport Layer	13	CO4
5.	Application layer	13	CO5
	TOTAL	**75**	

Course Objectives	1. To explore the students on the importance of computer networking and Protocols. 2. To explore the students to various Layering devices, protocols and Security measures against hacking. 3. To familiarize the students on wireless communication technology.

CO No		Course Outcome
CO1	**BM-501.1**	Explain the computer hardware components
CO2	**BM-501.2**	Explain the Networking components, Topologies &Network models
CO3	**BM-501.3**	Describe the Data link and MAC sublayers
CO4	**BM-501.4**	Describe the Network and Transport Layer
CO5	**BM-501.5**	Develop the Application layer.

Learning Outcomes

Understand Computer Hardware

1.0 Know meaning of PC Hardware, Software, and BIOS.
1.1 Know about POST and activities that take place during system start-up.
1.2 Identify various components present inside the cabinet and know their function (Mother Board, FDD, HDD, CD Drive, SMPS, various cables).
1.3 Identify various components present on the Mother Board and know their function (Microprocessor, chip-set, RAM, BIOS ROM, various connectors like Serial Port, Parallel Port, USB, AGP, FDD, HDD connectors).
1.4 Know about motherboard form factor and details of various form factors such as AT, ATX, micro ATX, NLX etc.
1.5 Draw layout of components and I/O ports on a typical mother board and explain their function.
1.6 Explain about functions of chipset and components of Intel 915, 945, 965 chipsets
1.7 Explain features of 4th Generation Intel Core Processors and AMD AcceleratedProcessors and know different Processor sockets like ZIF, SEC and PGA
1.8 Know about various memory technologies –SRAM, DRAM, SDRAM and DDR1, DDR2, DDR3 SDRAMs.
1.9 Know about RAM modules or packages like SIMM, DIMM and their specifications.
1.10 Know the constructional details and working of HDD.
1.11 Know the constructional details, writing and reading of data on CD-ROM, CD-R, and CDRW.
1.12 Know the differences between DVD and CD.
1.13 Know the operation of Optical Mouse.
1.14 Explain the operation of Dot Matrix, Inkjet, and Laser Printers.
1.15 Explain the operation of LCD/TFT monitor.

Understand about Networking components, Topologies & Network models: OSI& TCP/IP models

2.1 State the need for Networking.
2.2 List the Hardware and Software Components of Networking
2.3 Define LAN & WAN
2.4 Explain different network topologies (Bus, Star, Ring, Mesh, Hybrid)
2.5 Explain the working of token ring network.
2.6 Discuss FDDI and its properties.
2.7 Demonstrate about Coaxial Cables, Twisted-Pair Cables, Optical fibre cables, and connectors.
2.8 State functions of LAN Devices : Repeaters, Hubs, Switches, Bridge, Network Interface Cards (NICs), Routers (CISCO, DAX, Etc.), Modem (56KBPS Internal or External,ADSL Modems etc.) and Gateways
2.9 Explain OSI Reference Model with emphasis on each layer
2.10 Explain TCP/ IP model with emphasis on each layer
2.11 Compare OSI and TCP/IP model

Understand Data Link Layer

3.1 Explain the design issues of data link layer:
- (a) Services provided to network layer
- (b) Framing
- (c) Error control and flow control.

3.2 Explain elementary data link protocols.
- (a) Simplex Stop and Wait protocol
- (b) Sliding window protocols: Go-back-N protocol and Selective repeat

3.3. Explain the point-to-point protocol (PPP).

3.4. Explain HDLC protocol

3.5. Multiple Access protocols:
- (a) List random access protocols
- (b) List Controlled access protocols
- (c) List Channelization protocols
- (d) Explain CSMA/CD and CSMA/CA.

3.6. Discuss static and dynamic channel allocation in LANs and MANs.

3.7. List IEEE 802 standards

3.8. Explain IEEE 802 standard for wired LANs

3.9. Explain IEEE Standard 802.3 & Ethernet

3.10. Explain IEEE Standard 802.4 -Token Bus

3.11. Explain IEEE Standard 802.5 – Token Ring.

3.12. Explain Fibre Distributed Data Interface (FDDI)

3.13. MAC Sublayer:
- (a) Ethernet Cabling
- (b) Describe the concept of Ethernet MAC sub layer protocol
- (c) Explain MAC layer of Wireless LAN (IEEE 802.11 standard)

Understand Network and Transport Layer

4.1 Explain Network layer design issues.
- (a) Store and forward switching
- (b) Services provided to the transport layer
- (c) Implementation of connection less services and connection oriented services.
- (d) Compare virtual circuits and datagram subnets.

4.2 Routing Algorithms:
- (a) Define Non adaptive algorithm and Adaptive algorithm
- (b) List various Routing algorithms.
- (c) Explain about shortest path routing
- (d) Explain about distance vector routing

4.3 Define Congestion

4.4 Explain general principles of Congestion control

4.5 Explain the role of Network layer in the internet.

4.6 IP Addressing:
- (a) Explain IP addressing and classes with examples
- (b) Explain subnetting.
- (c) Explain format of IPv4 datagram
- (d) State the need for IPv6
- (e) Explain format of IPv6 datagram

4.7 Transport Layer:

(a) Explain services provided to upper layers

(b) Explain the concept of connection establishment and release.

4.8 The Internet Transport protocols:

(a) Explain UDP header

(b) Explain TCP service model

(c) Explain TCP segment header

(d) Explain TCP connection establishment and release.

Understand Application layer

5.1 DNS:

(a) Explain DNS namespace

(b) Explain the importance of Resource Records

(c) Explain the role of DNS server

5.2 Email

(a) Explain architecture and services

(b) The User Agent

(c) List Header fields related to message transport

(d) List types and subtypes of MIME

(e) Explain SMTP, POP3

5.3 World Wide Web

(a) Explain the architecture overview of World Wide Web

(b) Explain the importance of HTML, XML, XSL, XHTML

(c) Explain about HTTP protocol and HTTP commands

(d) Explain FTP

(e) Explain SMTP

(f) Explain Telnet

5.4 Multimedia services: VOIP

5.5 Explain about SNMP

5.6. Explain working of Virtual Private Networks (VPNs).and its protocols

5.7 Explain Network Monitoring and Troubleshooting and Remote Monitoring

CO-PO/PSO MATRIX

CO No	PO1	PO2	PO3	PO4	PO5	PO6	PO7	PSO1	PSO2	PSO3
BM-501.1	3							2	1	
BM-501.2	3	2						2	2	
BM-501.3	3	2	1				1	2	3	
BM-501.4	3							2	1	
BM-501.5	3		1				1	2	1	
Average	**3**	**2**	**1**				**1**	**2**	**1.8**	

3=Strongly mapped **2=Moderately mapped** **1=Slightly mapped**

HYPONATED COURSE CONTENTS

1.0 Computer Hardware

PC Hardware Software - Importance of BIOS and BIOS hardware interaction-POST and Bootstrap loading- Components inside the cabinet and know their function about Microprocessor, chip-set, RAM, BIOS ROM, Mother Board, FDD, HDD, CD Drive, SMPS, various connectors like Serial Port, Parallel Port, USB, AGP, FDD, HDD connectors- Motherboards based on the form factor -AT,ATX, micro ATX, mini ATX , Baby AT,BTX,NLX etc- Intel Chipsets – Intel 4th Generation Intel core Processor family – AMD Accelerated Processor Units - SMPS - RAM- Cache - L1, L2 Cache- Assembly and disassembly of Computer -Configuration and installation of Processor ,RAM, HDD, CDROM / DVD, Keyboard, mouse, monitor, and printer Constructional details and working of a Hard disk Drive - Hard disk interfacings standards like IDE/SCSI /SATA / PATA - Installation and constructional details of a CD- RO- process of reading and writing of data on various disk drives like CD-ROM,CD- Writer, Combo drive , DVD Drive etc.- Principle of working of an optical and opto mechanical mouse –Working principle of LCD/TFT -Working principle of Dot matrix printer, inkjet printer and Laser printer

2.0 Networking components, Networking Topologies & Networking models - OSI and TCP/IP Model

Networking.- Hardware and Software Components of Networking-Define LAN & WAN-Network topologies (Bus, Star, Ring, Mesh, Hybrid)- token ring network.- FDDI and its properties- LAN Devices : Repeaters, Hubs, Switches, Bridge, Network Interface Cards (NICs), Routers (CISCO, DAX, Etc.), Modem (56KBPS Internal or External, ADSL Modems etc.) and Gateways
OSI Reference Model Layers- TCP/ IP Layers-Compare OSI and TCP/IP model

3.0 Data Link Layer:

Design issues of data link layer: (a) Services provided to network layer (b) Framing (c) Error control and flow control - Elementary data link protocols: Simplex Stop and Wait protocol, Sliding window protocols : Go-back-N protocol and Selective repeat -Pointto-Point protocol (PPP).- HDLC protocol

Multiple Access protocols: Random access protocols - Controlled access protocols - Channelization protocols - CSMA/CD and CSMA/CA- Static and Dynamic channel allocation in LANs and MANs.- IEEE 802 standards: IEEE 802 standard for wired LANs - IEEE Standard 802.3 & Ethernet - IEEE Standard 802.4 -Token Bus- IEEE Standard 802.5 – Token Ring- Explain Fiber Distributed Data Interface (FDDI)

MAC Sublayer: Ethernet Cabling - Ethernet MAC sub layer protocol- MAC layer of Wireless LAN (IEEE 802.11 standard)

3.0 Network and Transport Layer:

Network layer design issues: Store and Forward switching-Services provided to the transport layer-Implementation of connection less services and connection oriented services.- Compare virtual circuits and datagram subnets.- Routing Algorithms: Non adaptive algorithm and Adaptive algorithm: - Shortest path routing- distance vector routing - Congestion - General principles of Congestion control.
Network layer in the internet.- IP Addressing: IP addressing and classes with examples - Subnet masking - format of IPv4 datagram - format of IPv6 datagram
Transport Layer: Services provided to upper layers - Connection establishment and release- Transport protocols: UDP header- TCP service model - TCP segment header - TCP connection establishment and release.

5.0 Application layer: DNS :DNS namespace-Importance of Resource Records-Role of DNS server -Email : Architecture and services -The User Agent- Header fields related to message transport -Subtypes of MIME- SMTP , POP3 -World Wide Web: Architecture overview of World Wide Web - Importance of HTML, XML, XSL, XHTML- HTTP protocol and HTTP commands- FTP- SMTP- Telnet- Multimedia services: VOIP- VPN-Network Monitoring and Troubleshooting.- Simple Network Management Protocol (SNMP) and its working- Remote Monitoring (RMON).

REFERENCE BOOKS

1. Stephen Bigelow ,PC Upgrading ,TMH
2. Manahar Lotia, Pradeep Nair, Payal Lotia , Modern computer hardware course,Bpb Publications.
3. Andrew S. Tanenbaum,Computer Networks,4th edition (9 August 2002)Prentice Hall.
4.Jean Andrews, Enhanced Guide to Managing And Maintaining Your PC -- (Thomson)
5. Basics of Networking -- NIIT PHI publications
6. Gilster ,PC Hardware A Beginners Guide -- (TMH)
7. Palmer ,Networking Essentials with Projects -Thomson

MODEL BLUE PRINT

S. No.	Unit Title	No. of periods	Weightage of marks	Marks wise Distribution of Weightage				Question wise Distribution of Weightage				COs Mapped
				R	U	Ap	An	R	U	Ap	An	
1.	Computer Hardware	13	14	6	8			2	1			CO1
2.	Networking components, Topologies & Network models	18	17	9	8			3	1			CO2
3.	Data link Layer and MAC Sublayer	18	17	9	8			3	1			CO3
4.	Network and Transport Layer	13	11	3	8			1	1			CO4
5.	Application layer	13	11	3	8			1	1			CO5
	HOTS question from chapter 3/4/5	--	10				10				1	
	Total	**75**	**80**	**30**	**40**		**10**	**10**	**5**		**1**	

Table specifying the scope of syllabus to be covered for Unit test-I and Unit Test-II

Unit Test	Learning outcomes to be covered
Unit Test-I	From 1.1 to 3.6
Unit Test-II	From 3.7 to 5.7

DBME UNIT TEST-I
MODEL QUESTION PAPER (C-20)
COMPUTER NETWORKS (BM-501)

Time: 90 Minutes Total Marks: 40

PART-A **16 Marks**

Instructions: (1) Answer **all** questions.
(2) First question carries four marks and each of rest carries **three** marks.
(3) Answer for Q.No.2 to 5 should be brief and straight to the point and shall not exceed ***five*** simple sentences.

1	Name any four motherboard components	R	4M	CO1
2.	Define LAN and WAN	R	3M	CO2
3	Write any three data link layer protocol.	R	3M	CO3
4	Compare hub and switch	R	3M	CO2
5	List random access protocols	R	3M	CO3

PART-B **3 x 8 = 24 marks**

Answer either (A) or (B) from each questions from part-B
Each question carries eight marks

6	(A) Explain the operation of LCD monitor. OR (B) Explain the operation of TFT monitor.	U	8M	CO1
7.	(A) Explain the OSI reference model. OR (B) Explain the TCP/IP model.	U	8M	CO2
8.	(A) Explain the service provided to the network layer. OR (B) Explain the simplex stop and wait protocol.	U	8M	CO3

BOARD DIPLOMA EXAMINATION, (C-20)
DBME- FIFTH SEMESTER EXAMINATION
COMPUTER NETWORKS (BM-501)

Time: 3Hours Total Marks: 80M

PART- A 10×3M=30M

Instructions: (1) Answer all questions
(2) Each question carries three marks
(3) Answers should be brief and straight to the point and shall not exceed five simple sentences.

1.	Name any four motherboard components	R	3M	CO1
2.	Define LAN and WAN	R	3M	CO2
3	Write any three data link layer protocol.	U	3M	CO2
4	Compare hub and switch	R	3M	CO3
5	List random access protocols	U	3M	CO4
6	Write the SMPS voltages	U	3M	CO5
7	Compare OSI model and TCP/IP model.	R	3M	CO2
8	List IEEE 802 standards.	R	3M	CO4
9	Define congestion	R	3M	CO4
10	List the functions of DNS	R	3M	CO5

PART-B **5 x 8 = 40 marks**

Answer either (A) or (B) from each questions from part-B

Each question carries eight marks

11	(A) Explain the operation of LCD monitor. OR (B) Explain the operation of TFT monitor.	U	8M	CO1
12	(A) Explain the OSI reference model. OR (B) Explain the TCP/IP model.	U	8M	CO2
13	(A) Explain the service provided to the network layer. OR (B) Explain the simplex stop and wait protocol.	U	8M	CO3

14	(A) Explain IP addressing and classes with examples			
	OR	U	8M	CO4
	(B) Explain format of IPv6 datagram.			
15	(A) Explain about SNMP			
	OR	U	8M	CO5
	(B) Explain working of Virtual Private Networks (VPNs).and its protocols.			

PART- C **1×10M=10M**

Instructions: (1) Answer the following question

(2) The question carries ten marks.

(3) Answers should be comprehensive and the criterion for valuation is the content but not the length of the answer.

16	Why IPV6 addressing scheme is developed? Justify with its features.	An	10M	CO5

MEASUREMENTS AND TEST EQUIPMENT

Course code	Course title	No of periods/week	Total no. of periods	Marks for FA	Marks for SA
BM-502	Measurement And Test Equipment	05	75	20	80

S.NO.	Unit title	No. of Periods	COs Mapped
1	Basics of Measurement and instrumentation	8	CO1
2	Analog instruments	20	CO2
3	Digital instruments	15	CO3
4	Cathode Ray Oscilloscope	12	CO4
5	Signal generators & Test Instruments	20	CO5
	TOTAL	75	

Course Objectives	1. To know the purpose of Analog instruments. 2. To know the working of analog, digital instruments. 3. To acquire the knowledge on cathode ray oscilloscope. 4. To acquire the knowledge on signal generators. 5. To know the working of test instruments.

CO No		Course Outcome
CO1	**BM-502.1**	Explain the performance characteristics of measuring instruments
CO2	**BM-502.2**	Explain the working of various analog instruments
CO3	**BM-502.3**	Explain the working of various digital instruments
CO4	**BM-502.4**	Explain the function ofCRT and CRO.
CO5	**BM-502.5**	Explain the function of signal generators and various test instruments.

Learning Outcomes

1.0 **Understand the purpose of measurement and instrumentation**.

1.1 Define measurement.
1.2 Classify the methods of measurements.
1.3 List the factors in selection of measuring instruments.
1.4 Explain the performance characteristics - a) calibration, b) accuracy, c) precision, d) repeatability, e) reproducibility, f) drift, g) sensitivity, h) resolution, i) dead zone, J) backslash, k) true value, l) hysteresis.

2.0 Understand the working of Analog instruments.

2.1 Explain the construction and principle of operation of PMMC meters.
2.2 Explain the principle of extending the range of DC ammeter and DC voltmeter.
2.3 List the advantages of using the Ayrton Shunt (Universal) .
2.4 Explain the i) Conversion of Ammeter to Voltmeter
ii) Conversion of Voltmeter to Ammeter
2.5 Define sensitivity of voltmeter.
2.6 Explain loading of volt meter with an example.
2.7 List the precautions to be taken while using an ammeter and voltmeter.
2.8 Explain the construction and working principle of series and shunt type Ohm meters
2.9 Explain the principle and working of rectifier type AC voltmeter.
2.10 Explain the circuits of DC/AC voltmeter, DC/AC ammeter and resistance measurement sections of a multimeter.
2.11 Explain the working principle of i) FET input electronic voltmeter.
ii) Differential Voltmeter with necessary circuit.
2.12 Explain the operation of Wheat Stone Bridge and list its applications.
2.13 Explain i) Inductance measurement using Maxwell's Bridge
ii) Capacitance measurement using Schering Bridge.

3.0 Understand working of Digital instruments.

3.1 List the advantages of digital instruments over analog instruments.
3.2 Define terms Resolution, Settling time, Propagation Delay.
3.3 Explain Ramp type Digital Voltmeter with block diagram
3.4 Explain dual slope integrating type digital voltmeter with block diagram
3.5 List the specifications of digital voltmeters.
3.6 Explain the working of Digital Multimeter with block diagram and list its specifications.
3.7 Explain the working of Digital capacitance meter.
3.8 Explain the working of digital LCR meter with block diagram
3.9 List the specifications of digital LCR meter.
3.10 Explain the principle of digital tachometer

4.0 Understand construction, working principle and use of CRO

4.1 Draw the block diagram of general purpose CRO and describe the function of each block.
4.2 Draw CRT and describe the function of different parts.
4.3 Write the expression for deflection sensitivity.
4.4 Explain vertical deflection system with block diagram.
4.5 Explain the horizontal deflection system and the necessity of time base.
4.6 List the conditions for stationary waveforms.
4.7 Mention the function and use of various controls and terminals of CRO.
4.8 List the specifications of CRO.
4.9 Explain the principle of Dual beam CRO.

4.10 **Understand the construction, working principle of AF signal generators and test instruments**

4.11 Explain the working of function generator with operational amp.
4.12 List the front panel controls and specifications of function generator.
4.13 List the applications of function generators.
4.14 Explain the block diagram of a pulse generator.
4.15 State the principle of energy measurement
4.16 Explain the working of AF power meter.
4.17 Explain the working of bolometer type RF power meters.
4.18 List the applications of power meters.
4.19 Explain the method of testing passive and active components (diode, transistor) using multimeter.
4.20 Explain the method of measuring leakage current, alpha, beta of a transistor using transistor tester.
4.21 State the necessity of Logic probe and its applications.
4.22 Explain how the digital ICs can be tested with digital IC tester
4.23 State the necessity of plotter and recorders.

CO-PO/PSO MATRIX

CO No	PO1	PO2	PO3	PO4	PO5	PO6	PO7	PSO1	PSO2	PSO3
BM-502.1	3							2		
BM-502.2	3	2						2		
BM-502.3	3	2	1				1	2		
BM-502.4	3							2		
BM-502.5	3		1				1	2		
Average	**3**	**2**	**1**				**1**	**2**		

3=Strongly mapped **2=Moderately mapped** **1=Slightly mapped**

HYPONATED COURSE CONTENTS

1. Basics of Measurements and Instrumentation

Definition of measurement and instrumentation, performance characteristics, classification.

2. Analog instruments:

PMMC Instrument, extending the range of ammeter and voltmeter, conversion of ammeter to voltmeter and vice versa, sensitivity, Loading of voltmeter, series and shunt type ohmmeter, ac voltage measuring with multimeter, Electronic voltmeter, differential voltmeter, Wheatstone, Maxwell and Schering Bridges.

3. Digital Instruments:

Digital voltmeter, Dual slope integrating type, resolution and sensitivity of Digital instruments,Multimeter, Specifications, Digital Capacitance meter, Digital LCR Meter, Working principle of Digital tachometer

4. Cathode Ray Oscilloscope:

Block diagram of CRO, parts of CRT, Deflection Sensitivity, vertical and horizontal deflection systems, delay line, controls, specifications, applications, Dual Beam CRO

5. Signal Generators and Test instruments:

Function generator, Pulse generator, specifications, Testing of components with Multimeter, Transistor tester, Logic Probe, Digital IC tester.

REFERENCE BOOKS:

1. Albert D. Helfrick William David Cooper, Modern Electronic Instrumentation and Measurement techniques, PHI Publications
2. A.K. Sawhney , PuneetSawhney, Electrical and Electronics Measurements and Instrumentation, DhanpatRai& Company, 2010
3. HS Kalsi, Electronic Instrumentation, Tata McGraw Hill
4. Roy Blake, Thomson Delmar, Electronic communication systems, Delmar cengage learning.
5. R.R.Gulati, Colour Television,TMH publishers
6. Robert L. Goodman, How Electronic Things Work.& What to Do When They Don't, TMH publishers
7. SP Bali Consumer electronics, Pearson
8. Mark E. Long, Digital Satellite Television Handbook, Newness
9. Gerald W Collins, Fundamentals of Digital television Transmission, John Wiley & Sons

MODEL BLUE PRINT

S. No	Unit title	No. of periods	Weightage of marks	Marks wise Distribution of Weightage				Question wise Distribution of Weightage				COs Mapped
				R	U	Ap	An	R	U	Ap	An	
1	Basics of Measurement and instrumentation	8	11	3	8			1	1			CO1
2	Analog instruments	20	14	3	11			1	2			CO2
3	Digital instruments	15	14	3	11			1	2			CO3
4	Cathode Ray Oscilloscope	12	14	3	8	3		1	1	1		CO4
5	Signal generators & Test Instruments	20	17	6	8	3		2	1	1		CO5
	HOTs question from 2/3/4 Chapters		10				10				1	
	Total	**75**	**80**	**18**	**46**	**6**	**10**	**6**	**7**	**2**	**1**	

Table specifying the scope of syllabus to be covered for Unit test-I & Unit Test-II

Unit Test	Learning outcomes to be covered
Unit Test-I	From 1.1 to 3.5
Unit Test-II	From 3.6 to 5.13

DBME UNIT TEST-I

MODEL QUESTION PAPER (C-20)

MEASUREMENT & TEST EQUIPMENT (BM-502)

Time: 90 Minutes Total Marks: 40

PART-A **16 Marks**

***Instructions*:** (1) Answer **all** questions.

(2) First question carries four marks and each of rest carries **three** marks.

(3) Answer for Q.No.2 to 5 should be brief and straight to the point and shall not exceed ***five*** simple sentences.

1.	a. List any two factors in selection of measuring instruments. b. Mention any two precautions while using voltmeter. c. List any two applications of wheatstone bridge. d. Mention any two specifications of digital voltmeter.	R	4M	CO1, CO2, CO3
2.	Define measurement.	R	3M	CO1
3	Write any three advantages of Ayrton shunt(universal).	U	3M	CO2
4	Define sensitivity of voltmeter.	R	3M	CO2
5	Define Resolution and propogation delay	R	3M	CO3

PART-B **3 x 8 = 24 marks**

Answer either (A) or (B) from each questions from part-B

Each question carries eight marks

6	(A) Explain the following terms. Precision, b) Resolution, c) Sensitivity, d) Dead Zone. OR (B) Classify the methods of measurement and define the following terms. Accuracy, b) Calibration, c) Hysteresis.	U	8M	CO1
7.	(A) Explain construction and principle of Series and shunt type ohm meter. OR (B) Explain the differential voltmeter with diagram.	U	8M	CO2
8.	(A) Explain Ramp type digital voltmeter with block diagram. OR (B) Explain dual slope integrating type digital voltmeter with block diagram.	U	8M	CO3

BOARD DIPLOMA EXAMINATION, (C-20)
DBME- FIFTH SEMESTER EXAMINATION
MEASUREMENT & TEST EQUIPMENT (BM-502)

Time: 3Hours Total Marks: 80M

PART- A10×3M=30M

Instructions: (1) Answer all questions

(2) Each question carries three marks

(3) Answers should be brief and straight to the point and shall not exceed five simple sentences.

1.	Define measurement.	R	3M	CO1
2.	Define sensitivity of voltmeter.	R	3M	CO2
3	Write any three advantages of Ayrtonshunt (universal).	U	3M	CO2
4	List six specifications of Digital voltmeter.	U	3M	CO3
5	Define Resolution and Propogation delay	R	3M	CO3
6	Draw block diagram of general purpose CRO	U	3M	CO4
7	State the principle of energy measurement.	U	3M	CO5
8	List six front panel controls of function generator.	R	3M	CO5
9	Mention the applications of Power meter.	U	3M	CO5
10	List three conditions for stationary waveforms.	U	3M	CO4

PART-B **5 x 8 = 40 marks**

Answer either (A) or (B) from each questions from part-B

Each question carries eight marks

11	(A) Explain the following terms. a) Precision, b) Resolution, c) Sensitivity, d) Dead Zone. OR (B) Classify the methods of measurement and define the following terms. a) Accuracy, b) Calibration, c) Hysteresis.	U	8M	CO1
12	(A) Explain the block diagram of pulse generator. OR (B) Explain the working of bolometer type RF power meter.	U	8M	CO5

13	(A) Explain Ramp type digital voltmeter with block diagram. OR (B) Explain the working of Digital LCR meter with block diagram.	U	8M	CO3
14	(A) Explain construction and principle of Series and shunt type ohm meter. OR (B) Explain the differential voltmeter with diagram.	U	8M	CO2
15	(A) Explain Vertical deflection system of CRO with block diagram. OR (B) Explain the principle of dual beam CRO.	U	8M	CO4

PART- C **1×10M=10M**

Instructions: (1) Answer the following question
(2) The question carries ten marks.
(3) Answers should be comprehensive and the criterion for valuation is the content but not the length of the answer.

16	Justify FET input voltmeter is superior to rectifier type AC voltmeter.	An	10M	CO5

MICROPROCESSORS

Course Code	Course title	No. of periods/week	Total no. of periods	Marks for FA	Marks for SA
BM-503	MICROPROCESSORS	5	75	20	80

S. No.	Unit Title	No. of Periods	COs Mapped
1	Introduction to Microprocessors	10	CO1
2	Architecture of 8086	15	CO2
3	Instruction set of 8086	20	CO3
4	Programming with 8086	20	CO4
5	Advanced Microprocessors	10	CO5
	Total	**75**	

Course Objectives	1. To familiarize with various microprocessors
	2. To understand the programming of 8086 microprocessor
	3. To learn the practical importance and applications of Microprocessors

CO No		Course Outcome
CO1	**BM-503.1**	Explain the concept of microcomputer and microprocessor.
CO2	**BM-503.2**	Explain the Architecture of 8086 microprocessor
CO3	**BM-503.3**	Explain the instruction set of 8086 microprocessors
CO4	**BM-503.4**	Analyse 8086 programming.
CO5	**BM-503.5**	Describe advancements in microprocessors

LEARNING OUTCOMES

Introduction to Microprocessors

1.1 Define microprocessor.
1.2 Explain the basic block diagram of a microcomputer
1.3 Mention the evolution of INTEL family of microprocessors
1.4 Define the terms: address bus, data bus, control bus, clock speed, word length
1.5 List any three 8-bit processors
1.6 List any three 16-bit processors
1.7 Compare 8-bit and 16-bit microprocessors
1.8 Compare assembly language, high level language, machine language
1.9 State the need for instruction set
1.10 Define the terms op-code and operand
1.11 Define fetch cycle, execute cycle and instruction cycle
1.12 List the steps involved in sequential processing
1.13 List the applications of microprocessors

Architecture of 8086

2.1 State the features of 8086 microprocessor
2.2 Draw the functional block diagram of 8086 and explain
2.3 State the need of bus control logic and memory segmentation
2.4 State the importance of segment registers
2.5 State the purpose of Instruction Pointer and Instruction Queue
2.6 List different general purpose registers of 8086 and state their function
2.7 State the purpose of pointer and index registers
2.8 Explain the working of ALU and control unit
2.9 List different flags of 8086 and mention their use
2.10 Draw the pin diagram of 8086 and state the function of each pin
2.11 Describe the maximum and minimum mode of operation.
2.12 Explain the generation of 20-bit Physical address with an example.
2.13 State the need of interrupt and list different types of interrupts.
2.14 Explain the Interrupt response in 8086

Instruction set of 8086

3.1 Draw the generalized Instruction format of 8086
3.2 Generation of code for any three instructions
3.3 Explain addressing modes of 8086 with examples
3.4 Classify the instruction set of 8086
3.5 Explain the data transfer group of instructions of 8086.
3.6 Explain the arithmetic group of instructions of 8086.
3.7 Explain the Logic group of instructions of 8086.
3.8 Explain the processor control group of instructions of 8086.
3.9 List the instructions affecting flags of 8086.
3.10 Explain the control transfer (branching) instructions of 8086.
3.11 Explain the String manipulation instructions of 8086.

Programming with 8086

4.1 Mention the use of various assembly language development tools like editor, assembler, linker, locator and debugger.
4.2 Explain the assembler directives
4.3 Explain how to write simple assembly language programs using data transfer instructions
   i) To transfer data between registers
   ii) To transfer data between register and memory location
   iii) To transfer data from one memory location to another memory location
4.4 Explain how to write simple assembly language programs using arithmetic instructions
   i) To perform addition/ subtraction/ multiplication/ division of two 8/16-bit numbers.
   ii) To perform addition of series of 'n' numbers
4.5 Explain how to write simple assembly language programs using logical instructions
   i) To perform AND/ OR/ XOR operations on two 8/ 16-bit numbers
   ii) To perform conversion from binary to gray on 4-bit data
4.6 Explain how to write simple assembly language programs using string manipulation instructions
   i) To find the length of the given string
   ii) To reverse the given string

Advanced Microprocessors

5.1 Explain pipelining.

5.2 Explain instruction level parallelism

5.3 Define hyper threading

5.4 Define cache memory and state the role of cache memory in increasing the performance of a computer

5.5 Define 32-bit processor and list any four 32-bit processors

5.6 Define 64-bit processor and list any four 64-bit processors

5.7 Distinguish between 32-bit and 64-bit processors

5.8 List the major functional difference between single core and dual core processor

5.9 List the important features of Intel core i3 processor

5.10 List the important features of Intel core i5 processor

5.11 List the important features of Intel core i7 processor

5.12 Distinguish between Intel core i3 and i5 processors

5.13 Distinguish between Intel core i5 and i7 processors

5.14 List the advanced features of Intel core i9 compared to core i7 processors

CO-PO/PSO MATRIX

CO No	PO1	PO2	PO3	PO4	PO5	PO6	PO7	PSO1	PSO2	PSO3
BM-503.1	3							1		
BM-503.2	3							2		
BM-503.3	3	2						2		
BM-503.4	3	2	1					2		
BM-503.5	3		1				1	3		
Average	**3**	**2**	**1**				**1**	**2**		

3=Strongly mapped **2=Moderately mapped** **1=Slightly mapped**

HYPONATED COURSE CONTENTS

1. Introduction to Microprocessors

Microprocessor- Basic block diagram of a microcomputer- evolution of Intel microprocessor-Important terms related to processors- Assembly language, high level language, machine language- need for instruction set- op-code and operand- fetch cycle, execute cycle and instruction cycle- applications of microprocessors

2. Architecture of 8086

Concepts of Parallel processing - memory segmentation-Features of 8086 – internal architecture of 8086 – Pin diagram of 8086 - minimum and maximum modes - calculation of physical address – flag register – basic 8086 system timing diagrams – interrupts.

3. Instruction set of 8086 and programming

Instruction format - Addressing modes **-** Instruction set – data transfer – Arithmetic and logical –– string – processor control instructions

4. Programming with 8086

Assembler directives – Assembler instruction format - program development tools – procedure for executing assembly program – sample programs.

5. Advancements in microprocessors

pipe lining -instruction level parallelism- hyper threading-cache memory 32- bit & 64-bit processors-i3, i5, i7 and i9 processors

Reference Books

1. Ramesh S Gaonkar ,Microprocessor architecture programming, and applications with the 8051, 5th edition,Penram International Publishing.
2. A K Roy, Advanced Microprocessors, 2nd edition, McGraw Hill Publishers
3. Berry B Brey,The Intel Microprocessor, Pearson
4. Venugopal and Rajkumar, X86 Microprocessor Programming TMH
5. Yu-Cheng Liu & Glenn A Gibson, Microcomputer systems: The 8086 Family.PHI
6. Rafiquzzaman,Microprocessors Theory and applications Intel and Motorola,PHI
7. Douglas V. Hall ,Microprocessors and interfacing programming and Hardware, McGraw Hill Publishers

BLUE PRINT:

Sl. No.	Unit Title	No. of Periods	Weightage Allotted	Marks Wise distribution of weightage				Question Wise distribution of weightage				COs mapped
				R	U	Ap	An	R	U	Ap	An	
1	Introduction to Microprocessors	10	11	3	-	8	-	1	-	1	-	CO1
2	Architecture of 8086	15	22	3	3	16	-	1	1	2	-	CO2
3	Instruction set of 8086	20	14	3	3	8	-	1	1	1	-	CO3
4	Programming with 8086	20	14	3	3	8		1	1	1		CO4
5	Advancements in Microprocessors	10	9	3	6	-	-	1	2	-	-	CO5
	HOTs question from 2,3, 4 Chapters		10				10				1	
Total		**75**	**80**	15	15	40	10	5	5	5	1	

Table specifying the scope of syllabus to be covered for Unit test-I & Unit Test-II

Unit Test	Learning outcomes to be covered
Unit Test-I	From 1.1 to 3.6
Unit Test-II	From 3.7 to 5.14

DBME UNIT TEST-I
MODEL QUESTION PAPER (C-20)
MICROPROCESSORS (BM-503)

Time: 90 Minutes | Total Marks: 40

PART-A **16 Marks**

***Instructions*:** (1) Answer **all** questions.

(2) First question carries four marks and each of rest carries **three** marks.

(3) Answer for Q.No.2 to 5 should be brief and straight to the point and shall not exceed ***five*** simple sentences.

1.	a. List any two applications of Microprocessors. b. List any two 16- bit Microprocessors. c. Mention any two interrupts. d. Write any two arithmetic group of instructions of 8086 .	R	4M	CO1, CO2, CO3
2.	Define Microprocessor.	R	3M	CO1
3	State the need of bus control logic.	R	3M	CO2
4	Classify the instruction set of 8086.	U	3M	CO3
5	Draw the generalized instruction format of 8086.	U	3M	CO3

PART-B **3 x 8 = 24 marks**

Answer either (A) or (B) from each questions from part-B

Each question carries eight marks

6	(A) Explain the microprocessor evolution and types. OR (B) Compare 8-bit and 16-bit microprocessors.	U	8M	CO1
7.	(A) Draw and explain the functional block diagram of 8086. OR (B) Draw the pin diagram of 8086 and state the function of each pin.	U	8M	CO2
8.	(A) Explain the addressing modes of 8086 with examples. OR (B) Explain the Arithmetic group of instructions of 8086.	U	8M	CO3

C-20-BM -503

BOARD DIPLOMA EXAMINATION, (C-20)
DBME- FIFTH SEMISTER EXAMINATION
MICROPROCESSORS (BM-503)

Time: 3Hours Total Marks: 80M

PART- A 10×3M=30M

Instructions: (1) Answer all questions
(2) Each question carries three marks
(3) Answers should be brief and straight to the point and shall not exceed five simple sentences.

1.	Define Microprocessor.	R	3M	CO1
2.	State the features of 8086 microprocessor.	R	3M	CO1
3	List different types of interrupts.	U	3M	CO2
4	Classify the instruction set of 8086.	U	3M	CO3
5	List the instructions affecting flags of 8086.	U	3M	CO3
6	Define the terms a) Editor b) Assembler c) linker d) Debugger.	R	3M	CO4
7	Write a simple ALP to transfer data from one memory location to another memory location.	Ap	3M	CO4
8	Define pipelining.	R	3M	CO5
9	Define hyper threading.	R	3M	CO5
10	Differentiate between INTEL core i3 and i5 processors.	U	3M	CO5

PART-B **5 x 8 = 40 marks**

Answer either (A) or (B) from each questions from part-B

Each question carries eight marks

11	(A) Explain the microprocessor evolution and types.			
	OR	U	8M	CO1
	(B) Compare 8-bit and 16-bit microprocessors.			
12	(A) Draw and explain the functional block diagram of 8086.			
	OR	U	8M	CO2
	(B) Draw the pin diagram of 8086 and state the function of each pin.			
13	(A) Explain the working of ALU and control unit.			
	OR	U	8M	CO2
	(B) Draw and explain BUS organization in MIN & MAX modes of 8086			

microprocessor.

14	(A) Explain the addressing modes of 8086 with examples. **OR** (B) Explain the Arithmetic group of instructions of 8086.	U	8M	CO3
15	(A) Write an ALP using Arithmetic instructions to perform a) 16-bit Addition b) 16-bit Subtraction **OR** (B) Write an ALP using Logic instructions to perform a) Logical AND b) Logical OR	Ap	8M	CO4

PART- C 1×10M=10M

Instructions: (1) Answer the following question

(2) The question carries ten marks.

(3) Answers should be comprehensive and the criterion for valuation is the content but not the length of the answer.

16	Write an Assembly Language Programme to multiply any two 16-bit numbers after reversing them and store the result in two successive memory locations.	An	10M	CO4

BIOMEDICAL EQUIPMENT

Course code	Course title	Total no. of periods	Marks for FA	Marks for SA
BM-504	**Biomedical Equipment**	75	20	80

S.NO.	Unit Title	No. of Periods	COs Mapped
1	Cardiac Instrumentation	18	CO1
2	Neuro-Muscular Instrumentation	15	CO2
3	Phonocardiography & Pace maker	18	CO3
4	Defibrillators	12	CO4
5	Respiratory and Anaesthesia	12	CO5
	TOTAL	**75**	

Course Objectives	1.To expose the students to the importance of Cardiac instrumentation. 2.To expose the students to various medical equipment used in cardiology (phonocardiography, pacemaker and defibrillators). 3.To expose the students to Neuro-Muscular Instrumentation: EEG, EMG and Nerve Muscle Stimulators. 4. To expose the students to Respiratory and Anesthesia Equipment: Medical ventilators and centralized medical gases distribution system.

Learning Outcomes

CO No		Course Outcome
CO1	**BM-504.1**	Explain the principle& Working of various equipment used in Cardiac Instrumentation.
CO2	**BM-504.2**	Describe various equipment used in Neuro-muscular Instrumentation.
CO3	**BM-504.3**	Describe the working of phonocardiography &different types of pace makers
CO4	**BM-504.4**	Analyse the Working of various cardiac defibrillators.
CO5	**BM-504.5**	Explain the working principle of respiratory and anesthesia equipment.

Principle& Working of Cardiac Instrumentation

1.1 Draw typical ECG wave form and write its parameters
1.2 Explain the correlation of the electrical activity of the heart with its mechanical activities
1.3 Explain various lead configurations used in ECG recording
1.4 Explain block diagram of an ECG machine
1.5 Explain six and twelve channel ECG recorder.
1.6 Explain the working principle of Treadmill Test.

1.7 Explain the working principle of Holter monitor
1.8 List the sources of noises in ECG recording
1.9 Explain the minimization of noise in ECG recording.
1.10 List the specifications of an ECG machine.
1.11 Explain the block diagram of a Bed side monitor and the Central monitoring nursing station.
1.12 List the critical parameters monitored in ICCU.
1.13 List the normal ranges of blood pressure in the basic circulatory system.
1.14 Explain the principles of direct techniques of blood pressure measurement.
1.15 Explain the principles of indirect techniques of blood pressure measurements(korotkoff sounds)

Operation of Neuro-muscular Instrumentation

2.1 Write the basis of EEG signal
2.2 Explain the working principle of EEG machine with a block diagram.
2.3 Name various controls in an EEG machine
2.4 List the requirements of an EEG amplifier
2.5 Explain the 10-20 system of EEG electrode placement.
2.6 List the types of electrodes used in EEG recording
2.7 Explain the resting rhythms and sleep stages
2.8 Explain the block diagram of an EMG recording system
2.9 List the electrodes used in EMG recording
2.10 Explain the significance of nerve conduction velocity
2.11 Explain the principle of operation of the nerve muscle stimulator
2.12 Draw and Explain the block diagram of a nerve muscle stimulator
2.13 List types of waves forms used in nerve muscle stimulator & their applications.

Operation of Phonocardiography & Pace maker

3.1 Explain the mechanism and origin of heart sounds.
3.2 Explain the characteristics of the first & the second heart sound.
3.3 Write the need for Phonocardiography.
3.4 Explain the instrumentation used in Phonocardiography.
3.5 State the need for a cardiac pacemaker.
3.6 Classify Pacemakers on various aspects.
3.7 Explain the block diagram of an Asynchronous pacemaker.
3.8 Write the advantages of Synchronous pacemakers over Asynchronous pacemakers.
3.9 Explain the block diagram of Demand type synchronous pacemakers.
3.10 Explain the block diagram of Atrial synchronous pacemakers.
3.11 Explain the block diagram of a Rate Responsive pacemaker.
3.12 List the power supplies used in external & internal pacemakers.
3.13 List the types of electrodes and leads used inpacemakers

Appraise the principle of various defibrillators

4.1 State the need for a defibrillator
4.2 Classify defibrillators
4.3 Explain the circuit diagram of AC defibrillator
4.4 Write the advantages of DC defibrillators over AC defibrillators
4.5 Explain the circuit diagram of capacitive discharge DC defibrillator
4.6 Explain the circuit diagram of delay line capacitive discharge defibrillator

4.7 Write the need for synchronization of defibrillator shock
4.8 Explain the block diagram of a cardioverter
4.9 List the types of electrodes used in external & internal defibrillators
4.10 Compare external & internal defibrillators
4.11 List the precautions to be taken while handling defibrillators
4.12 Explain the defibrillator analyzer.

Appraise the working principle of Respiratory and Anesthesia equipment.

5.1 Identify the need for a ventilator,
5.2 Classify ventilators.
5.3 Describe the principle of operation of various types of ventilators– pressure limited, volume limited, positive pressure, negative pressure.
5.4 List the types of cycling in ventilators.
5.5 Compare different types of ventilators.
5.6 Sketch the block diagram of Micro Processor based ventilator.
5.7 Express the importance of Anesthesia.
5.8 List the functions of a Boyle's machine.
5.9 Explain the operation of Boyle's machine with diagram.
5.10 Describe centralized Gas distribution system.
5.11 Identify color code for pipes and cylinders used for distribution and storage of gases.

CO-PO/PSO MATRIX

CO No	PO1	PO2	PO3	PO4	PO5	PO6	PO7	PSO1	PSO2	PSO3
BM-504.1	3				1				1	3
BM-504.2	3	1	2		1				1	3
BM-504.3	3	1			1				1	3
BM-504.4	3			1	1				1	3
BM-504.5	3		2	1	1				1	3
Average	**3**	**1**	**2**	**1**	**1**				**1**	**3**

3=Strongly mapped 2=Moderately mapped 1=Slightly mapped

HYPONATED COURSE CONTENTS

1.0 Neuro-Muscular Equipment: Basics of EEG, block schematic of EEG machine, 10 – 20 electrode placements, resting rhythms and sleep stages of EMG. Block diagram of EMG recording system, types of electrodes used, instrumentation for measurement of nerve condition velocity.

2.0 Phonocardiography & Pacemakers: Origin of heart sounds, Phonocardiographic instrumentation. Classification of pacemakers, Block diagram of various types of pacemakers asynchronous, synchronous (demand and atrial – synchronous) and hysteresis pacemakers power supplies and electrodes used in pacemakers.

3.0 Defibrillators: Circuit diagrams of AC, capacitive discharge and delay line capacitive discharge defibrillators. Types of electrodes Need for synchronization. Block diagram of cardioverter testing and safety

4.0 Respiratory and Anaesthesia Equipment: Principle and applications of ventilators, impedance pneumography and pneumotachograph. Boyles machine and gas distribution system.

5.0 Oxygenators & OT equipment: Types of Oxygenators, functions and comparisons Electro surgical Unit. Different modes and their wave forms used in electrosurgery, block diagram, Hazards and safety.

Reference books

1. John G Webster, Medical Instrumentation Application & Design ,Houghton Mifflin Company
2. R.S. Khandpur , Hand Book of Bio-Medical Instrumentation – (Tata Mc. Graw Hill)
3. Carr& Brown, Introduction to Biomedical equipment Technology – 1981,John Willey & sons, Newyork
4. John G. Webster , Encyclopedia of Medical devices & Instrumentation - Vo I,II,III, & IV Editor., Wiley & Interscience
5. David O. Cooney, Biomedical Engg. Principles ,CRC press

MODEL BLUE PRINT

S. No.	Unit Title	No. of periods	Weightage of marks	Marks wise Distribution of Weightage				Question wise Distribution of Weightage				COs Mapped
				R	U	Ap	An	R	U	Ap	An	
1	Cardiac Instrumentation	18	17	9	8			3	1			CO1
2	Neuro-Muscular Instrumentation	15	14	6	8			2		1		CO2
3	Phonocardiography & Pace maker	18	14	6	8			2		1		CO3
4	Defibrillators	12	14	6	8			2	1			CO4
5	Respiratory and Anesthesia	12	11	3		8		1	1			CO5
	HOTs questionfrom chapter 1/3/5	--	10				10				1	
	Total	**75**	**80**	**30**	**32**	**8**	**10**	**10**	**3**	**2**	**1**	

Table specifying the scope of syllabus to be covered for Unit test-I & Unit Test-II

Unit Test	Learning outcomes to be covered
Unit Test-I	From 1.1 to 3.7

Unit Test-II	From 3.8 to 5.11

DBME UNIT TEST-I
MODEL QUESTION PAPER (C-20)
BIOMEDICAL EQUIPMENT (BM-504)

Time: 90 Minutes Total Marks: 40

PART-A 16 Marks

Instructions: (1) Answer **all** questions.
(2) First question carries four marks and each of rest carries **three** marks.
(3) Answer for Q.No.2 to 5 should be brief and straight to the point and shall not exceed ***five*** simple sentences.

1.	Name any four controls of 6 channel ECG machine	R	4M	CO1
2.	List the Critical parameters monitored in ICCU.	U	3M	CO1
3	Draw Typical ECG wave form and write its parameters.	U	3M	CO1
4	List the electrodes used in EMG recording.	U	3M	CO2
5	State the need for a cardiac pacemaker	R	3M	CO3

PART-B 3 x 8 = 24 marks

Answer either (A) or (B) from each questions from part-B
Each question carries eight marks

6	(A) Explain Various lead configurations used in ECG recording. OR (B) Explain the Block diagram of a Bed side monitor.	U	8M	CO1
7.	(A) Explain the working principle of EEG machine with a neat block diagram. OR (B) Explain the principle of operation of the nerve muscle stimulator.	U	8M	CO2
8.	(A) Explain the Block diagram of demand type synchronous pacemakers. OR (B) Explain the Instrumentation used in Phonocardiography.	U	8M	CO3

BOARD DIPLOMA EXAMINATION, (C-20)
DBME- FIFTH SEMESTER EXAMINATION
BIOMEDICAL EQUIPMENT (BM-504)

Time: 3Hours Total Marks: 80

PART-A **10×3M=30M**

Instructions: (1) Answer all questions
(2) Each question carries three marks
(3) Answers should be brief and straight to the point and shall not exceed five simple sentences.

1.	List the specifications of an ECG machines.	R	3M	CO1
2.	List the Critical parameters monitored in ICCU.	R	3M	CO1
3	Draw Typical ECG wave form and write its parameters.	R	3M	CO2
4	Name various controls in an EEG machine.	R	3M	CO2
5	List the electrodes used in EMG recording.	U	3M	CO2
6	Write the Need for phonocardiography.	U	3M	CO3
7	List the Power supplies used in external & internal pacemakers.	U	3M	CO3
8	State the Need for a defibrillator.	R	3M	CO4
9	Compare external & internal defibrillators.	U	3M	CO5
10	List the functions of a Boyle's machine.	R	3M	CO5

PART-B **5 x 8 = 40 marks**

Answer either (A) or (B) from each questions from part-B
Each question carries eight marks

11	(A) Explain Various lead configurations used in ECG recording. OR (B) Explain the Block diagram of a Bed side monitor.	U	8M	CO1
12	(A) Explain the working principle of EEG machine with a neat block diagram. OR (B) Explain the principle of operation of the nerve muscle stimulator.	U	8M	CO2

13	(A) Explain the Block diagram of demand type synchronous pacemakers. OR (B) Explain the Instrumentation used in Phonocardiography.	U	8M	CO3
14.	(A) Explain the block diagram of capacitive discharge dc defibrillator OR (B) Explain the block diagram of Cardioverter.	U	8M	CO4
15.	(A) Explain the block diagram of microprocessor based ventilators. OR (B) Explain the function of each component in Boyle's machine.	U	8M	CO5

PART- C **1×10M=10M**

Instructions: (1) Answer the following question
(2) The question carries ten marks.
(3) Answers should be comprehensive and the criterion for valuation is the content but not the length of the answer.

16	Can beat labelling task is performed after the ventricular fibrillation detection in automated arrhythmia monitoring system& why? If not what task can be performed &state the reason.	An	10M	CO4

MEDICAL IMPLANTS ENGINEERING

Course code	Course title	No. of periods/week	Total no. of periods	Marks for FA	Marks for SA
BM-505	**MEDICAL IMPLANTS ENGINEERING**	5	75	20	80

S.NO.	Unit Title	No. of Periods	COs Mapped
1.	Bio Compatibility	12	CO1
2.	Biomaterials	20	CO3
3.	Orthopaedic Implants	20	CO3
4.	Cardiac &Muscular implants	15	CO4
5.	Eye & Ear Implants	08	CO5
	TOTAL	**75**	

Course Objectives	1. Student should know the necessity of bio-compatibility. 2. Analyse different types of biomaterials and its classification; apply the concept towards biomaterials use. 3. Student should learn the concept of tissue replacement technique and soft tissue replacement technique by using biomaterials.

CO No		Course Outcome
CO1	**BM-505.1**	Definitions of Bio Compatibility and Bio Materials.
CO2	**BM-505.2**	Analyse the use of various biomaterials and for different applications.
CO3	**BM-505.3**	Explain orthopaedic implants
CO4	**BM-505.4**	Explain cardiac and neuro – muscular implants
CO5	**BM-505.5**	Explain eye and ear implants.

Learning Outcomes

1.0 Discuss about the Bio compatibility

1.1 Define Bio Compatibility**.**
1.2 Explain the significance of Bio Compatibility**.**
1.3 Explain the wound - healing process**.**
1.4 Explain the tissue response to Implants**.**
1.5 Explain the systemic effects of Implants**.**
1.6 Explain the factors effecting Bio Compatibility**.**
1.7 Explain In vitro testing (Mechanical testing) of implants, tensile, compression, wears, fatigue, corrosion studies and fracture toughness.
1.8 Explain the In-vivo testing (animals): biological performance of implants.

2.0 Differentiate the types of Bio Materials

2.1 Define Bio Material
2.2 Classification of biomaterials
2.3 Explain surface properties, mechanical properties of materials
2.4 Explain metallic implant materials: Stainless steel, Co-based alloys, Ti and Ti- based alloys
2.5 State the importance of stress-corrosion cracking
2.6 Explain polymeric implant materials: polyolefin 's, polyamides, acrylicpolymers, hydrogels, and silicon rubbers
2.7 Define bio ceramics.
2.8 List the types of bio ceramic materials.
2.9 Explain bio reabsorbable and bioactive ceramics.
2.10 List the applications of different biomaterials
2.11 Compare the characteristics of various biomaterials

3.0 Demonstrate the Orthopedic Implants

3.1 Explain Hard tissue replacement techniques.
3.2 Explain internal fracture fixation devices
3.3 Explain orthopedic fixation devices
3.4 Explain the concept of Bone cement.
3.5 Differentiate cemented and uncemented joints
3.6 Explain permanent joint replacement.
3.7 Explain total Hip joint replacement technique.
3.8 Explain total Knee joint replacement technique.
3.9 Explain total Ankle joint replacement technique
3.10 Explain total Shoulder joint replacement technique
3.11 Explain total Elbow joint replacement technique
3.12 Explain total Wrist joint replacement technique

3.13 List the problems with orthopedic implants
3.14 Explain the safety precautions to be taken with orthopedic Implants.

4.0 Examine the Cardiac and Muscular Implants
4.1 List the types of tissue grafts
4.2 Explain vascular implants, blood compatibility of synthetic vascular material, synthetic blood vessels, biological grafts
4.3 Explain the need for artificial heart valve
4.4 Explain the types of artificial heart valves
4.5 State the need for implantable pacemaker
4.6 Explain the programmable internal pacemaker
4.7 State the need of implantable defibrillator
4.8 Explain the block diagram of implantable defibrillator
4.9 List the safety precautions to be taken with defibrillators
4.10 Explain the operation of drop - foot stimulator.
4.11 Explain bladder stimulator.
4.12 Explain the operations of electric hand
4.13 List the applications of electric hand
4.14 Explain the artificial arm prosthesis

5.0 Examine the Cochlear and eye implants
5.1 State the Need for cochlear implants.
5.2 Explain the cochlear implants in detail.
5.3 Describe contact lenses, intra ocular lenses, vitrous implants, eye shields
5.4 Explain the safety precaution to be taken for the above.

CO-PO/PSO MATRIX

CO No	PO1	PO2	PO3	PO4	PO5	PO6	PO7	PSO1	PSO2	PSO3
BM-505.1	3				1				1	3
BM-505.2	3	1	2		1				1	3
BM-505.3	3	1			1				1	3
BM-505.4	3			1	1				1	3
BM-505.5	3		2	1	1				1	3
Average	**3**	**1**	**2**	**1**	**1**				**1**	**3**

3=Strongly mapped 2=Moderately mapped 1=Slightly mapped

HYPONATED COURSE CONTENTS

1. Bio Compatibility

Definition and significance of biocompatibility, factors influencing bio compatibility.

2. Biomaterials

Describe characteristics of a material to be used in the manufacture of various medical implants, types of materials used as biomaterials – Metals, Polymers, Ceramics and composite materials, characteristics and application of different biomaterials, comparison of various biomaterials.

3. Orthopedic implants

Orthopedic fixation devices, Bone cement; Permanent joint replacement – Hip, Knee, ankle, shoulder, elbow and wrist; manufacturing process of orthopedic implants; problems with orthopedic implants and safety precautions.

4. Cardiac and Muscularimplants:

Implantable pacemakers, implantable defibrillators and prosthetic heart valves Operation of drop-foot stimulator, bladder stimulator, electric hand and arm prosthesis.

5. Cochlearimplants:

Need and operation of cochlear and eye implants.

REFERENCE BOOKS

1. Joseph D. Bronzino, Donald R. Peterson,The Biomedical Engineering Handbook; 4th edition (30 July 2015), , CRC Press.

2. John G. Webster,Encyclopedia of Medical Devices and Instrumentation, Set of 6 volumes, 6th edition (4 April 2006), Wiley-Interscience.

3. Hench, Biomaterials: An Interfacial Approach, November 1, 1982, Academic Pr

4. Joon BU Park, Biomaterials Science and Engineering,31 October 1984, Springer.

5. Gary E. Wnek,Gary L. Bowlin,Encyclopedia of Biomaterials and Biomedical Engineering - Volume I-IV, Illustrated edition (6 July 2004),CRC Press.

6. C.P.Sharma&M.Szycher, Blood compatible materials and devices, 1991,TechnomicPublishing Co. Ltd.,

7. Sujata V. Bhat, Biomaterials, 2002, Narosa Publishing House.

MODEL BLUE PRINT

S. No.	UNIT TITLE	No. of periods	Weightage of marks	Marks wise Distribution of Weightage				Question wise Distribution of Weightage				COs Mapped
				R	U	Ap	An	R	U	Ap	An	
1	Bio Compatibility	12	11	3		8		1		1		CO1
2	Biomaterials	20	17	6	3	8		2	1	1		CO2
3	Orthopedic Implants	20	14	6		8		2		1		CO3
4	Cardiac &Muscularimplants	15	14	3	3	8		1	1	1		CO4

5	Eye & Ear Implants	08	14	3	3	8		1	1	1		CO5
	HOTs question from Chapter 2,3,4		10				10				1	
	Total	**75**	**80**	**21**	**9**	**40**	**10**	**7**	**3**	**5**	**1**	

Table specifying the scope of syllabus to be covered for Unit test-I & Unit Test-II

Unit Test	Learning outcomes to be covered
Unit Test-I	From 1.1 to 3.4
Unit Test-II	From 3.5 to 5.4

DBME UNIT TEST-I
MODEL QUESTION PAPER (C-20)
MEDICAL IMPLANTS ENGINEERING (BM-505)

Time: 90 Minutes Total Marks: 40

PART-A 16 Marks

***Instructions*:** (1) Answer **all** questions.
(2) First question carries four marks and each of rest carries **three** marks.
(3) Answer for Q.No.2 to 5 should be brief and straight to the point and shall not exceed ***five*** simple sentences.

1.	Define Bio-compatibility	R	4M	CO1
2.	Name the types of Bio-Ceramics.	R	3M	CO2
3	Write any four applications of Bio-material	R	3M	CO2
4	List the orthopedic fixations devices	R	3M	CO3

5	Define bone cement.	R	3M	CO3

PART-B **3 x 8 = 24 marks**

Answer either (A) or (B) from each questions from part-B

Each question carries eight marks

6	(A) Explain the tissue response to implant and implant response towards tissue. OR (B) Explain the systemic effect of implant.	U	8M	CO1
7.	(A) Explain the polymeric materials polysurfone, silicon rubber and hydro gels. OR (B) Explain the importance of wear resistance and low fracture toughness.	U	8M	CO2
8.	(A) Explain hard tissue replacement implant techniques. OR (B) Explain orthopedic fracture fixation devices.	U	8M	CO3

BOARD DIPLOMA EXAMINATION, (C-20)
DBME- FIFTH SEMESTER EXAMINATION
MEDICAL IMPLANTS ENGINEERING (BM-505)

Time: 3Hours Total Marks: 80

PART- A10×3M=30M

Instructions: (1) Answer all questions
(2) Each question carries three marks
(3) Answers should be brief and straight to the point and shall not exceed five simple sentences.

1.	Define Bio-compatibility	R	3M	CO1
2.	Name the types of Bio-Ceramics.	R	3M	CO1

3	Write any four applications of Bio-material	R	3M	CO2
4	Define Bio-Materials	R	3M	CO2
5	List the problems with orthopaedic implants.	U	3M	CO2
6	Name the types of internal fracture fixation device.	U	3M	CO3
7	Name the types of artificial heart valve.	U	3M	CO3
8	Sate the need for implantable defibrillator	R	3M	CO4
9	List the importance of ocular implant.	U	3M	CO5
10	State the need for Cochlear implant.	R	3M	CO5

PART-B **5 x 8 = 40 marks**

Answer either (A) or (B) from each questions from part-B

Each question carries eight marks

11	(A) Explain the tissue response to implant and implant response towards tissue. OR (B) Explain the systemic effect of implant.	U	8M	CO1
12	(A) Explain the polymeric materials polysurfone, silicon rubber and hydro gels. OR (B) Explain the importance of wear resistance and low fracture toughness.	U	8M	CO2
13	(A) Explain about Bone cement. OR (B) Explain total knee joint replacement techniques.	U	8M	CO3
14	(A) Explain the block diagram of implantable pacemaker. OR (B) Explain the operation of drop - foot stimulator.	U	8M	CO4
15	(A) Explain about contact lenses, intra ocular lenses, vitrous implants, eye shields. OR (B) Explain the cochlear implant in details.	U	8M	CO5

PART- C **1×10M=10M**

Instructions: (1) Answer the following question
(2) The question carries ten marks.
(3) Answers should be comprehensive and the criterion for valuation is the content but not the length of the answer.

16 Why stress shielding, aseptic loosening& fretting fatigue may cause failure of bone implant? An 10M CO3

MEDICAL INFORMATICS & TELEMEDICNE

Course code	Course title	No. of periods/week	Total no. of periods	Marks for FA	Marks for SA
BM-506	**MEDICAL INFORMATICS & TELEMEDICNE**	5	75	20	80

S.NO.	Unit Title	No. of Periods	COs Mapped
1	Medical Informatics & Artificial Intelligence	15	CO1
2	Computer-Assisted	15	CO2

	Instructions		
3	Computer-Assisted Surgery	18	CO3
4	Telemedicine	15	CO4
5	Telesurgery	12	CO5
	Total	**75**	

Course Objectives	1. Student would able to understand the concept of Medical informatics and Artificial intelligence. 2. Student should learn the use of computers in medical field and surgery 3. Student should learn the concept of Telesurgery and Telemedicine.

CO No		**Course Outcome**
CO1	**BM-506.1**	Explain Medical informatics, Expert system and Artificial intelligence
CO2	**BM-506.2**	Explain the Computer instructions in various medical fields.
CO3	**BM-506.3**	Apply the computers in Surgery: 3D navigation system.
CO4	**BM-506.4**	Explain the Telemedicine system
CO5	**BM-506.5**	Analyse the Equipments used in telesurgery

Learning Outcomes

1.0 Understand Medical informatics and Artificial intelligence:

1.1 Explain Medical informatics.
1.2 State the need for Medical informatics in Education/Training.
1.3 List the prospects of Medical informatics.
1.4 Explain Artificial intelligence.
1.5 Explain an Expert system.
1.6 State the need for Expert system.
1.7 Explain about Material and Methods.
1.8 State the need for knowledge representation.

1.9 Explain the methods of knowledge representation.
1.10 List the advantages of Expert system.
1.11 List the applications of Expert system.

2.0 Employ Computer instructions in various medical fields

2.1 State the need for Computer assisted medical education.
2.2 Explain the utility of simulation in education.
2.3 State the need for virtual reality in medical education.
2.4 List the applications of virtual reality.
2.5 Explain the concept of Tele – Education and Tele – Monitoring.
2.6 Explain the concept of 3D Imaging.
2.7 List the limitations of Endoscopy.
2.8 Explain general Endoscopy
2.9 List the benefits and limitations of virtual Endoscopy.
2.10 List the applications of virtual environment.

3.0 Employ the computers in Surgery

3.1 Name the conventional surgery procedures.
3.2 List the limitations of conventional surgery.
3.3 List the applications of computers in surgery.
3.4 Explain 3D Navigation systems.
3.5 Explain orthopaedic 3D Navigation system.
3.6 Explain about merits and demerits of Computer assisted surgery.
3.7 State the need for surgical simulation.
3.8 List the applications of surgical simulation.

4.0 Appraise the principles of Telemedicine

4.1 Define Telemedicine.
4.2 State the need for Telemedicine.
4.3 List the advantages of Telemedicine.
4.4 Explain about technology, materials and methods in Telemedicine.
4.5 Explain about peripheral devices used in Telemedicine.
4.6 Explain about Telemedicine systems.
4.7 Explain the use of internet in Telemedicine
4.8 Explain controversial issues related to Telemedicine
4.9 Explain reliability of Telemedicine.
4.10 Analysis of expenditure (cost) in Telemedicine.
4.11 List the applications of Telemedicine.

5.0 Appraise the principles of Telesurgery

5.1 Define Telesurgery.
5.2 State the need for Telesurgery.
5.3 Distinguish between general surgery and Telesurgery.

5.4 Explain the concept of Tele-Presence.
5.5 Explain the Tele-Mentoring method.
5.6 Explain Robotic surgery equipment.
5.7 List the advantages of Telesurgery.
5.8 List the disadvantages of Telesurgery.
5.9 Explain about technology, material and methods in Telesurgery.
5.10 Compare the technology of telemedicine with that of Telesurgery.
5.11 Analyze the scope of Telesurgery.

CO-PO/PSO MATRIX

CO No	PO1	PO2	PO3	PO4	PO5	PO6	PO7	PSO1	PSO2	PSO3
BM-506.1	3				1				1	3
BM-506.2	3	1	2		1				1	3
BM-506.3	3	1			1				1	3
BM-506.4	3			1	1				1	3
BM-506.5	3		2	1	1				1	3
Average	**3**	**1**	**2**	**1**	**1**				**1**	**3**

3=Strongly mapped **2=Moderately mapped** **1=Slightly mapped**

HYPONATED COURSE CONTENTS

1. Introduction to Medical informatics

Need for Medical informatics, Artificial intelligence, Expert system, materials and methods, Knowledge representation.

2. Computer – Assisted instructions:

Computer Assisted medical education, simulation, virtual reality, Tele-education, Tele- monitoring, 3D imaging, virtual endoscopy.

3. Computer – Assisted surgery

Computer – Assisted surgery, 3D navigation systems, intra-operative imaging, orthopedic 3D navigation system, surgical simulation.

4. Telemedicine

Need for Telemedicine, peripheral devices in Telemedicine, Telemedicine systems, Internet Telemedicine, controversial issues.

5. Telesurgery:

Need for Telesurgery, Tele presence, Tele-mentoring, Robotic surgery, scope of Tele surgery.

REFERENCE BOOKS

1. Mohan Bansal ,Medical Informatics,Tata McGrahHill

MODEL BLUE PRINT

S. No.	UNIT TITLE	No. of periods	Weightage of marks	Marks wise Distribution of Weightage				Question wise Distribution of Weightage				COs Mapped
				R	U	Ap	An	R	U	Ap	An	
1	Medical informatics & Artificial intelligence	15	14	3	3	8		1	1	1		CO1

2	Computer-Assisted instructions	15	17	6	3	8		2	1	1		CO2
3	Computer-Assisted surgery	18	22	3	3	16		1	1	2		CO3
4	Telemedicine	15	06	3	3			1	1			CO4
5	Telesurgery	12	11	3		8		1		1		CO5
	HOTs question from Chapter 2,3,5		10				10				1	
	Total	**75**	**80**	**18**	**12**	**40**	**10**	**6**	**4**	**5**	**1**	

Table specifying the scope of syllabus to be covered for Unit test-I & Unit Test-II

Unit Test	Learning outcomes to be covered
Unit Test-I	From 1.1 to 3.4
Unit Test-II	From 3.5 to 5.11

DBME UNIT TEST-I

MODEL QUESTION PAPER (C-20)

MEDICAL INFORMATICS AND TELE MEDICINE ENGINEERING (BM-506)

Time: 90 Minutes Total Marks: 40

PART-A **16 Marks**

Instructions: (1) Answer **all** questions.

(2) First question carries four marks and each of rest carries **three** marks.

(3) Answer for Q.No.2 to 5 should be brief and straight to the point and shall not exceed ***five*** simple sentences.

1.	List the any four aspects of medical informatics	R	4M	CO1
2.	State the need for knowledge representation.	R	3M	CO2
3	Write the need of computer in medical education.	R	3M	CO2
4	List the merits and demerits of virtual endoscopy.	R	3M	CO3
5	List the limitations of endoscopy	R	3M	CO3

PART-B **3 x 8 = 24 marks**

Answer either (A) or (B) from each questions from part-B

Each question carries ***eight*** marks

6	(A) Explain the methods of knowledge representation.			
	OR	U	8M	CO1
	(B) Explain the Artificial Intelligence.			
7.	(A) Explain the concept of Tele -Education and Tele-Monitoring			
	OR	U	8M	CO2
	(B) Explain the utility of simulation in education.			
8.	(A) Explain the orthopaedic 3D Navigation systems.			
	OR	U	8M	CO3
	(B) Explain about merits and demerits of Computer Assisted Surgery.			

BOARD DIPLOMA EXAMINATION, (C-20)
DBME- FIFTH SEMESTER EXAMINATION
MEDICAL INFORMATICS AND TELE MEDICINE ENGINEERING (BM-506)

Time: 3Hours Total Marks: 80

PART-A10×3M=30M

Instructions: (1) Answer all questions

(2) Each question carries three marks

(3) Answers should be brief and straight to the point and shall not exceed five

simple sentences.

1.	List the applications of Expert systems.	R	3M	CO1
2.	State the need for knowledge representation.	R	3M	CO1
3	Write the need of computer in medical education.	R	3M	CO2
4	List the merits and demerits of virtual endoscopy.	R	3M	CO2
5	List the limitations of endoscopy	U	3M	CO2
6	Name the conventional surgery procedure.	U	3M	CO3
7	State the need of surgical simulation.	U	3M	CO3
8	Define Tele-Medicine.	R	3M	CO4
9	List the advantages of Tele-Medicine.	U	3M	CO5
10	Write the merits and demerits of Tele Surgery.	R	3M	CO5

PART-B **5 x 8 = 40 marks**

Answer either (A) or (B) from each questions from part-B

Each question carries eight marks

11	(A) Explain the methods of knowledge representation. OR (B) Explain the Artificial Intelligence.	U	8M	CO1
12	(A) Explain the concept of Tele -Education and Tele-Monitoring OR (B) Explain the utility of simulation in education.	U	8M	CO2
13	(A) Explain the orthopaedic 3D Navigation systems. OR (B) Explain about Merits and Demerits of Computer Assisted Surgery.	U	8M	CO3
14	(A) Explain about peripheral Devices used in Tele-Medicine. OR (B) Explain controversial issues related to Tele-Medicine	U	8M	CO4
15	(A) Explain Robotic Surgery equipment. OR (B) Explain about Technology – Material and Methods in Telesurgery	U	8M	CO5

PART- C **1×10M=10M**

Instructions: (1) Answer the following question
(2) The question carries ten marks.
(3) Answers should be comprehensive and the criterion for valuation is the content but not the length of the answer.

16 What is the technique used to assist surgery remotely and why it is most expensive when compared with other conventional surgeries? An 10M CO3

MEASUREMENT & TEST EQUIPMENT LAB PRACTICE

Course Code	Course title	No of periods/week	Total no of periods	Marks for FA	Marks for SA
BM-507	Measurement and Test equipment Lab Practice	3	45	40	60

S. No.	Unit Title	No. of Periods	COs Mapped
1	Basic electrical & electronics parameters	10	**CO1**

2	Various meters	15	**CO2**
3	Cathode Ray Oscilloscope	11	**CO3**
4	Testers	9	**CO4**
	TOTAL	**45**	

Course Objectives	1. To measure various parameters of electrical and electronics using test instruments.
	2. To construct ohm meters
	3. To convert of voltmeter to ammeter and vice versa
	4 learn the practical importance of CRO.
	5 Test various parameters of transistors and IC'S

CO No		**Course Outcome**
CO1	**BM-507.1**	Measure the electrical and electronic parameters using test instruments
CO2	**BM-507.2**	Construct series and shunt type ohm meters
CO3	**BM-507.3**	Convert voltmeter to ammeter and vice versa
CO3	**BM-507.3**	Handle CRO for measurement of different parameters.
CO4	**BM-507.4**	Test various parameters of transistor and IC's

LEARNING OUTCOMES:

1. Basic parameters

1.1 Measure Inductance using LCR meter

1.2 Measure Capacitance using LCR meter

1.3 Measure Resistance using LCR meter

1. Meters

2.1 Test active and passive components using multimeter.

2.2 Measure frequency of a given signal using digital frequency meter

2.3 Extension of ammeter
2.4 Conversion of Ammeter to Voltmeter.
2.5 Conversion of Voltmeter to Ammeter.
2.6 Construction of series type ohm meter
2.7 Construction of shunt type ohm meter

2. Cathode ray Oscilloscope

3.1 Measure AC and DC voltages using CRO
3.2 Measure pulse parameters using CRO
3.3 Measure frequency of an unknown signal using Lissajous figures on CRO

3. Testers

4.1 Testing of various ICs using IC tester
4.2 Testing of various transistors using Transistor tester

CO-PO/PSO MATRIX

CO No	PO1	PO2	PO3	PO4	PO5	PO6	PO7	PSO1	PSO2	PSO3
BM-507.1	3							1		
BM-507.2	2	2	1					3		
BM-507.3	3	2						2		
BM-507.4	2		1				1	2		
Average	2.5	2	1				1	2		

3=Strongly mapped **2=Moderately mapped** **1=Slightly mapped**

Life Skills

Course Code	Course Title	No. of Periods/Week	Total No. of Periods	Marks for FA	Marks for SA
C-508	Life Skills	3	45	40	60

S. No.	Unit Title	No of Periods	COs Mapped
1	Attitude	4	CO1

2	Adaptability	4	CO1, CO2
3	Goal Setting	4	CO1, CO2, CO3
4	Motivation	4	CO1, CO2, CO3
5	Time Management	4	CO2
6	Critical thinking	4	CO3
7	Creativity	4	CO3
8	Problem Solving	5	CO3
9	Team Work	4	CO4
10	Leadership	4	CO4
11	Stress Management	4	CO4
Total Periods		**45**	

Course Objectives	To understand the importance of Life skills for acceptable, sustainable and ethical behaviour in academic, professional and social settings
	To exhibit language competence appropriate to acceptable social and professional behaviour.
	To demonstrate time management, stress management, team skills, problem solving ability to manage oneself in academic, professional and social settings.

CO-PO Matrix

Course Code **C-508**	**Course Title: English** **Number of Course Outcomes: 4**			**No. of Periods: 45**
POs	Mapped with CO	CO Periods Addressing PO in Column 1	Level of Mapping	Remarks

CO No.	**Course Outcomes**
CO1	Demonstrates positive attitude and be able to adapt to people and events
CO2	Fixes personal and professional goals and manages time to meet targets
CO3	Exhibits critical and lateral thinking skills for problem solving.
CO4	Shows aptitude for working in teams in a stress free manner and sometimes/ very often/ mostly display leadership traits.

	No.	Number	Percentage %	(1,2,3)	
PO1		Not directly applicable for Life Skills Course. However activities that use content and situations from academic, professional and social settings relevant to the Programme shall be exploited for triggering thought and interaction in the Course.			
PO2					
PO3					
PO4					
PO5	CO1, CO2, CO3, CO 4	11	25%		>60%: Level 3
PO6	CO1, CO2, CO3, CO4	27	45%		16 -59%: Level 2
PO7	CO1, CO2, CO3, CO4	7	30%		Up to 15%: Level 1

Level 3 – Strongly Mapped
Level 2- Moderately Mapped
Level 1- Slightly Mapped

Mapping Course Outcomes with Program Outcomes:

CO	PO 1	PO 2	PO 3	PO 4	PO 5	PO 6	PO 7
CO 1					✓	✓	✓
CO 2					✓	✓	✓
CO3					✓	✓	✓
CO4					✓	✓	✓

Blue Print for evaluation based on Course Outcomes for SA:

Note: Every Activity based Question that focuses on COs and responses as exhibited through communication has to be given marks for the following parameters

- Clarity of Thinking as Exhibited through Content
- Features of Etiquette

***Rubric Descriptors 'Outstanding/ Very Good/ Good/ Satisfactory/ Poor' levels of Competence**

Level of Competence	Parameters of Assessment	
	Clarity of thinking as exhibited through content	**Features of etiquette**
Outstanding 10	**Thinking** is **extremely logical** and suggested course of action is **feasibile** Shows **creativity and uniqueness** Exhibits **expert use of expression** (organizational devices and discourse markers) that denote clarity in thought.	Exhibits **courtesy to all most appropriately** with **confidence**
Very Good 8/9	**Thinking** is **clear and logical** Suggested **course of action is feasible** Shows **traces of creativity** Exhibits **good expression** (organizational devices and discourse markers) that denote clarity in thought.	Exhibits **courtesy to all to a considerable level.**
Good 6/7	**Thinking is clear and logical most of the time**. Lacks creativity or out of the box thinking as expressed through content.	Exhibits **courtesy / politeness to an acceptable level.**
Satisfactory 4/5	**Thinking is logical**; However **expressing content is disjointed and disorganized.**	Has courtesy but often fumbles with language.
Poor 3 or less than 3	**Thoughts** as expressed through content are **incoherent.Language skills are very limited.**	Fails to show courtesy to others.

Blue Print for evaluation based on Course Outcomes for SA of each student:
Note: Marks are awarded for each student as per the Rubric descriptors.

S No.	Questions based on Course Outcomes	Periods Allocated for practic	Max Marks	Poor >3	Satisfactory 4 /5	Good 6/7	Very Good	Outstanding 10

		al work					**8/9**	
1	Short presentation on GOALS with Timeline and Action Plan	12	10					
2	State what you will do in the given situation (Assesses adaptability and critical thinking skills, leadership, team skills)	12	10					
3	In how many different and creative way can you use _____ (Object) other than its primary use	8	10					
4	What solutions can you think of for _____ problem.	13	10					
	Total	**45**	**60**					

Note: The marks that are awarded for the student for 40 to be increased proportionally for60.

Learning Outcomes

1. **Attitude Matters :**
   - 1.1 Understand the importance of positive attitude and the consequences of negative attitude.
   - 1.1 Demonstrate positive attitude in dealing with work-related issues and in personal life.

2. **Adaptability….makes life easy :**
   - 2.1 Understand the significance of adaptability.
   - 2.2 Show adaptability whenever needed, both at place of work and on personal front.

3. **Goal Setting … life without a Goal is a rudderless boat!**
   - 3.2 Understand the SMART features of goal-setting.
   - 3.3 State one's short-term and long-term goals and spell out plans to achieve them.

4. **Motivation … triggers success!**
   - 4.1 Comprehend the need for motivation in order to achieve success in life.
   - 4.2 State how one is motivated in life.
   - 4.3 Show the impact of motivation on one's life.

5. **Time Management… the need of the Hour!**
    - 5.1 Understand the value of time management and prioritizing in life
    - 5.2 Demonstrate the effect of time management on one's professional work.

6. **Critical Thinking … logic is the key!**
    - 6.1 Distinguish between facts and assumptions
    - 6.2 Use logical thinking in dealing with professional matters.

7. **Creativity … the essential you!**
    - 7.1 Understand the importance of thinking out of the box in dealing with critical issues
    - 7.2 Solve problems using creativity / imagination.

8. **Problem Solving … there is always a way out!**
    - 8.1 Understand the need for and importance of problem solving.
    - 8.2 Use logic or creativity to solve a problem at workplace or home.

9. **Team Work… together we are better!**
    - 9.1 Understand the need for team skills / team building
    - 9.2 Demonstrate one's skills as a team player.

10. **Leadership… the meaning of a leading!**
    - 10.1 Understand the need for team skills / team building
    - 10.2 Demonstrate one's skills as a team player.

11. **Stress Management… live life to the full!**
    - 11.1 Understand what causes stress and how to cope with stress at workplace.
    - 11.2 Demonstrate how stress can be overcome in a healthy way.

COMPUTER HARDWARE & NETWORKING LAB PRACTICE

Course Code	Course title	No of periods/week	Total no of periods	Marks for FA	Marks for SA
BM-509	**COMPUTER HARDWARE & NETWORKING LAB**	10	60	40	60

	PRACTICE				

EXP no.	Unit Title	No. of Periods	COs Mapped
1	**PC hardware** (a) Identify motherboard components (b) RAM identification, removal, installation (c) Assembling and Disassembling of a PC (d) Upgradation of PC (e) CMOS setup. (f) Practice on formatting of Hard disk	12	CO1
2	**OS and driver software installation** (a) Installation of operating system software (Windows XP / Windows7) (b) Installation of device driver software (c) Installation of application software (MS-Office 2007/ 2010) (d) Print a summary of your system Hardware. (e) To recover lost data on hard drive.	9	CO2
3	**Networking cables** (a) Straight connections using crimping tool. (b) Installation of a switch and connecting systems to a network Hub / switch	9	CO3
4	**IP configuration and network device installation** (a) Configuration of IP Address and Subnet (b) Installation of a modem (internal, external or USB) and connecting to internet.	6	CO4
5	**Establishment of network connectivity** (a) Implementation of peer to peer network (b) Implementation of workgroup network (c) Implementation of Wi-Fi Network	9	CO5
	TOTAL	**45**	

CO No		Course Outcome
CO1	**BM-509.1**	Identify the PC mother board components, RAM installation, PC upgradation, CMOS setup and formatting of hard disk.

CO2	**BM-509.2**	Install OS,device driver softwares and print summary of your system Hardware and recover loss of data.
CO3	**BM-509.3**	Preparing the UTP cable for cross and straight connections using crimping tool.
CO4	**BM-509.4**	Connect a system in network using switch/Hub, installation and configuration of NIC card.
CO5	**BM-509.5**	Implement the peer to peer network, workgroup network and Wi-Fi Network

Course Objectives	1. To installation of OS and driver software's.
	2. To learn the practical importance of computer hardware and networking.

LEARNING OUTCOMES:

1. **Experiments on PC hardware**

1.1 Identify motherboard components
1.2 RAM identification, removal, installation
1.3 Assembling and Disassembling of a PC
1.4 Upgradation of PC
1.5 CMOS setup.
1.6 Practice on formatting of Hard disk

1. Installation OS and driver software installation

2.1 Installation of operating system software (Windows XP / Windows7)
2.2 Installation of device driver software
2.3 Installation of application software (MS-Office 2007/ 2010)
2.4 Print a summary of your system Hardware.
2.5 To recover lost data on hard drive.

2. Practicing of crimping and connection of networking devices

3.1 Straight connections using crimping tool.
3.2 Installation of a switch and connecting systems to a network Hub / switch

3. IP configuration and network device installation

4.1 Configuration of IP Address and Subnet
4.2 Installation of a modem (internal, external or USB) and connecting to internet.

4. Establishment of network connectivity

5.1 Implementation of peer to peer network
5.2 Implementation of workgroup network
5.3 Implementation of Wi-Fi Network

CO-PO/PSO MATRIX

CO No	PO1	PO2	PO3	PO4	PO5	PO6	PO7	PSO1	PSO2	PSO3
BM-509.1	3							2		
BM-509.2	3	1	2					2		
BM-509.3	3	1						2		
BM-509.4	3			1				2		
BM-509.5	3		2	1	1			2		
Average	**3**	**1**	**2**	**1**	**1**		**1**	**2**		

3=Strongly mapped **2=Moderately mapped** **1=Slightly mapped**

Course Code	Course title	No of periods/week	Total no of periods	Marks for FA	Marks for SA
BM-510	**Microprocessors lab**	3	45	40	60

S No	Unit Title	No. of Periods	COs Mapped
1	Familiarization of Assembler (TASM /MASM)	5	CO1
2	8086 programs to practice data transfer instructions	8	CO2
3	8086 programs to practice Arithmetic instructions	10	CO3
4	8086 programs to practice logical/bit manipulation instructions	10	CO4
5	8086 programs to practice branching instructions	12	CO5
	Total	**45**	

CO No		Course Outcome
CO1	**BM-510.1**	Describe the usage of TASM/MASM.
CO2	**BM-510.2**	Apply data transfer instructions in Assembly language of 8086 microprocessors
CO3	**BM-510.3**	Apply Arithmetic instructions in Assembly language of 8086 microprocessors
CO4	**BM-510.4**	Apply bit manipuation and logicalinstructions in Assembly language of 8086 microprocessors
CO5	**BM-510.5**	Apply branching instructions in Assembly language of 8086 microprocessors

LEARNING OUTCOMES:

1. Familiarization of Assembler (TASM /MASM)

2. 8086 programs to practice data transfer instructions

Course Objectives	1. To familiarize with programming in Assembly language of 8086 microprocessors
	2. To understand the programming in Assembly language of 8086 microprocessors
	3. To learn the practical importance and applications of programming in Assembly language of 8086 microprocessors

2.1 Program to perform block transfer of data
2.2 Program to perform block interchange
2.3 Program to fill a given block of memory with 00h or FFh

3. 8086 programs to practice arithmetic instructions

3.1 Program to perform 16-bit addition.
3.2 Program to perform 16-bit subtraction
3.3 Program to perform 16-bit multiplication.
3.4 Program to perform 16-bit division
3.5 Program to find factorial of 8-bit data

4. 8086 programs to practice logical/bit manipulation instructions

4.1 Program to find 2's complement of given 16 bit number
4.2 Program to check whether the given number is even or odd
4.3 Program to convert binary code to gray code

5. 8086 programs to practice branching instructions

5.1 Program to find the sum of first ‘n’ natural numbers

5.2 Program to find the sum of given ‘n’ numbers

5.3 Program to find biggest/smallest number in the given array

5.4 Write an assembly language program to count number of ones and zeros in a given binary number.

CO-PO/PSO MATRIX

CO No	PO1	PO2	PO3	PO4	PO5	PO6	PO7	PSO1	PSO2	PSO3
BM-510.1	3						1	1		
BM-510.2	3							2		
BM-510.3	3	2						2		
BM-510.4	3	2	1					3		
BM-510.5	2	2	1	1				3		
Average	**2.8**	**2**	**1**	**1**			**1**	**2**		

3=Strongly mapped 2=Moderately mapped 1=Slightly mapped

VI SEMESTER

HOSPITAL MANAGEMENT & ENTREPRENEURSHIP

Course Code	Course title	No. of	Total	Marks	Marks for SA

		periods/week	no. of periods	for FA	
BM-601	Hospital Management & Entrepreneurship	06	90	20	80

S.NO.	Unit Title	No. of Periods	COs Mapped
1.	Management, Entrepreneur and Entrepreneurial Development	18	CO1
2.	Administration of Hospital Systems & Services	25	CO2
3.	Hospital Planning	15	CO3
4.	Industrial Legislation & Safety Policies	20	CO4
5.	Smart technologies	12	CO5
	TOTAL	**90**	

Course Objectives	1. To Familiarize the students to the importance of Hospital administration process. 2. To Familiarize the students to various types of hospitals, hospital standards, safety procedure.

CO No		Course Outcome
CO1	**BM-601.1**	Explain the principles of Management and Entrepreneur
CO2	**BM-601.2**	Explain the administration of Hospital Systems & Services
CO3	**BM-601.3**	Analyse the principles Hospital Planning
CO4	**BM-601.4**	Explain the various safety, legislations and policies.
CO5	**BM-601.5**	Apply the Smart Technologies with IoT

Learning Outcomes

Understand the principles of Management and Entrepreneur

1.1 State the Role of Industry,
1.2 Mention various types of Industries and their Ownership
1.3 Understand sole proprietorship and partnership
1.4 Know about Public & Private limited Companies.
1.5 Discuss about Shares & Debentures of a company.
1.6 State the functions of Management.
1.7 State the concept of entrepreneur and Role of entrepreneur in small scale industries.
1.8 State the requirements and characteristics of an entrepreneur.
1.9 List the self-employment schemes available.
1.10 Discuss about Pre market survey.
1.11 Discuss about product selection and site selection.
1.12 Draw different plant layouts.
1.13 Know the technical support & collaborations.
1.14 List financial support systems and their schemes.
1.15 Explain the methods of organizing resources.
1.16 State Marketing and sales department functions.
1.17 Mention the factors to be considered for promoting the sales.
1.18 State the need for Co – operation between sales & service departments for enterprise development

Administration of Hospital Systems & Services.

2.1 State the role of Bio-medical Engineer in Hospitals, Industry & Research Institutions.
2.2 Distinguish between Hospital & Industry &Research institutions.
2.3 Discuss the features of organization in Hospital.
2.4 Classification of various Hospitals.
2.5 Identify various departments in hospitals.
2.6 State the purpose and services offered by primary health care system.
2.7 Give an overview, location, design & organization of Emergency service, outpatient services, engineering services, auxiliary services, nourishing services
2.8 Give an overview of drugs & medical supplies.
2.9 Explain the Records Management.

Know about Hospital Planning:

3.1 State the principle of planning.
3.2 State the factors for selecting the location
3.3 State the factors for selecting the site
3.4 Know about Hospital Layout.
3.5 Know about Budgeting.

Know about various safety considerations and comprehend various Legislations & policies.

4.1 List different hazards in Industry & Hospital
4.2 State the importance of safety & security.
4.3 Mention various fire hazards and the safety precautions to prevent them
4.4 Explain Alarm procedure for bomb threat.
4.5 List various electrical hazards & precautions to be taken to prevent them.
4.6 State the National health policy, health policy, health legislation.
4.7 Patient & consumer protection Act - 1986
4.8 Factories Act.
4.9 Minimum wages Act and Industrial disputes Act.
4.10 Responsibilities of Employees & Employers.
4.11 Employer & employee relation
4.12 Welfare activities.
4.13 Medical Insurance and Policies.

Smart Technologies

5.1 Get an overview of IoT (Internet of Things).
5.2 Define the term IoT
5.3 Know how IoT work
5.4 List the key features of IoT
5.5 List the components of IoT: hardware, software, technology and protocols
5.6 List the advantages and disadvantages of IoT
5.7 IoT Applications : Smart Cities, Smart Energy and the Smart Grid, Smart Transportation and Mobility ,Smart Home, Smart Buildings and Infrastructure Smart Factory and Smart Manufacturing Smart Health
5.8 Food and Water Tracking and Security.
5.9 Social Networks and IoT

CO-PO/PSO MATRIX

CO No	PO1	PO2	PO3	PO4	PO5	PO6	PO7	PSO1	PSO2	PSO3
BM-601.1	3						2	2		3
BM-601.2	3	1	2				1	2		3
BM-601.3	3							2		3
BM-601.4	3	1	2	1			3	2	2	3
BM-601.5	3	1	2				3	2		3
Average	**3**	**1**	**2**	**1**			**3**	**2**	**2**	**3**

3=Strongly mapped **2=Moderately mapped** **1=Slightly mapped**

HYPONATED COURSE CONTENTS

1. Management &Entrepreneurship

Definitions of industry, commerce and business. Evolution of management theories. Principles of scientific management, functions of management. Difference of administration and management. Role, characteristics and functions of entrepreneur, role of small-scale industries, self-employment schemes, planning, product selection, site selection, plant selection, technical & financial support, marketing and sales management.

2. Administration of Hospital Systems & Services

Biomedical equipment procurement procedure, proper selection, standardization. Capability, safety requirements, spares requirement, Evaluation, testing & installation, purchase & contract procedure, Training to medical staff on technical capabilities and proper use of Bio – medical Equipment, operating instructions. Bio-medical equipment maintenance procedures, mandatory requirements, preventive maintenance & periodical servicing procedures, preparation of servicing schedules, fault diagnosis, Repairs & modifications, maintenance of log books.

Functional organization of Biomedical/clinical Engg., department lay out & setting of clinical Engineering lab/workshop, requirements, test & servicing of Equipment.

3 . Hospital Planning.

Principles of planning, selection of location, site & orientation, Budgeting layout, organization of the hospital, equipment plans.

4. Industrial Legislation & Safety, policies

Importance of safety at work place, security and loss prevention, fire safety, bomb threat, Alarm systems. National, state health policies, health legislation, the patient and the consumer protection act 1986, Indian factories act, minimum wages act, industrial disputes act, welfare activities, rights and responsibilities of employers & employees.

5. Smart Technologies:

Overview of IoT - Define IoT, how IoT work, key features of IoT, components of IoT : hardware, software, technology and protocols, advantages and disadvantages of IoT - IoT Applications - Smart Cities, Smart Energy and the Smart Grid, Smart Transportation and Mobility, Smart Home, Smart Buildings and Infrastructure, Smart Factory and Smart Manufacturing, Smart Health, Food and Water Tracking and Security, Social Networks and IoT.

REFERENCE BOOKS

1. G.D. Kunders, S. Gopinath A. Katakam,Hospitals planning, design & Management,Tata Mc.Graw hill
2. R.C. Goyal ,Hand book of Hospital personnel Management,PHI
3. Soni Ashok,Source book of modern technology for hospital,1992 ,ISHA, Bangalore
4. Dr.O.P.Khanna,Industrial Engineering and management,kanna publications
5. Converging_Technologie for Smart Environments and Integrated Ecosystems, IERC Book Open Access 2013 pages-54-76
6. Entrepreneurship by TTTI, Madras
7. Joel E.Ross,Total quality management, CRC press.

MODEL BLUE PRINT

S. No.	Unit title	No. of periods	Weightage of marks	Marks wise Distribution of Weightage				Question wise Distribution of Weightage				COs Mapped
				R	U	Ap	An	R	U	Ap	An	
1.	Management, Entrepreneur and Entrepreneurial Development	18	14	6	8			2	1			CO1
2.	Administration of Hospital Systems & Services	25	20	12	8			2	2	1		CO2
3.	Hospital Planning	15	11	3	8			1	1			CO3
4.	Industrial Legislation & Safety Policies	20	14	6	8			2	1			CO4
5.	Smart technologies	12	11	3		8		1	1			CO5
	HOTs question FROM CHAPTER 3/4/5	--	10				10				1	
	Total	**90**	**80**	**30**	**32**	**8**	**10**	**8**	**6**	**1**	**1**	

Table specifying the scope of syllabus to be covered for Unit test-I & Unit Test-II

Unit Test	Learning outcomes to be covered
Unit Test-I	From 1.1 to 3.3
Unit Test-II	From 3.4 to 5.15

DBME UNIT TEST-I
MODEL QUESTION PAPER (C-20)

HOSPITAL MANAGEMENT & ENTREPRENEURSHIP (BM-601)

Time: 90 Minutes | Total Marks: 40

PART-A **16 Marks**

Instructions: (1) Answer **all** questions.

(2) First question carries four marks and each of rest carries **three** marks.

(3) Answer for Q.No.2 to 5 should be brief and straight to the point and shall not exceed ***five*** simple sentences.

1.	Write any four functions of management	R	4M	CO1
2.	Write down the characteristics of entrepreneur.	R	3M	CO1
3	State the purpose and services offered by primary health care system.	R	3M	CO2
4	State the Role of Bio-medical Engineer in hospitals	R	3M	CO2
5	State the factors for selecting the location.	R	3M	CO3

PART-B **3 x 8 = 24 marks**

Answer either (A) or (B) from each questions from part-B

Each question carries eight marks

6	(A) Explain about Shares & Debentures of a company. OR (B) Explain the methods of organizing resources.	U	8M	CO1
7.	(A) Explain the Records Management. OR (B) Explain the features of Organization in Hospital.	U	8M	CO2
8.	(A) State the factors for selecting the Location. OR (B) State the factors for selecting the sites.	U	8M	CO3

BOARD DIPLOMA EXAMINATION, (C-20)

DBME- SIXTH SEMESTER EXAMINATION

HOSPITAL MANAGEMENT & ENTREPRENEURSHIP (BM-601)

Time: 3Hours Total Marks: 80

PART- A10×3M=30M

Instructions: (1) Answer all questions
(2) Each question carries three marks
(3) Answers should be brief and straight to the point and shall not exceed five simple sentences.

1.	State the Role of Industry.	R	3M	CO1
2.	Write down the characteristics of entrepreneur	R	3M	CO1
3	List financial support system and their schemes.	R	3M	CO2
4	State the Role of Bio-medical Engineer in hospitals	R	3M	CO2
5	State the purpose and services offered by primary health care system.	U	3M	CO2
6	Write an overview of drugs & medical supplies	U	3M	CO3
7	State the factors for selecting the location.	U	3M	CO3
8	List different hazards in Industry & Hospitals	R	3M	CO4
9	State the importance of safety & security.	U	3M	CO5
10	Write Employer & employee relation	R	3M	CO5

PART-B **5 x 8 = 40 marks**

Answer either (A) or (B) from each questions from part-B
Each question carries eight marks

11	(A) Explain about Shares & Debentures of a company. OR (B) Explain the methods of organizing resources.	U	8M	CO1
12	(A) Explain the Records Management. OR (B) Explain the features of Organization in Hospital.	U	8M	CO2
13	(A) Write about Budgeting. OR (B) State the factors for selecting the sites.	U	8M	CO3

14	(A) Explain Alarm procedure for bomb threat. OR (B) Explain the about Welfare activities.	U	8M	CO4
15	(A) Explain about Smart Energy and the Smart Grid. OR (B) Explain the components of IoT: hardware, software, technology and protocols	U	8M	CO5

PART- C **1×10M=10M**

Instructions: (1) Answer the following question
(2)The question carries ten marks.
(3) Answers should be comprehensive and the criterion for valuation is the content but not the length of the answer.

16	Why a person with working schedule of 24/7 uses smart appliances with the help of IOT.	An	10M	CO5

MICROCONTROLLERS AND INTERFACING

Course Code	Course title	No. of periods/week	Total no. of	Marks for FA	Marks for SA

			periods		
BM-602	Microcontrollers and Interfacing	06	90	20	80

S. No.	Unit Title	No. of Periods	COs Mapped
1	Architecture of 8051Microcontroller	22	CO1
2	Instruction set of 8051 microcontrollers	20	CO2
3	8051 Programming Concepts	16	CO3
4	Interfacing Simple I/O devices	16	CO4
5	Advanced Microcontrollers, Embedded systems	16	CO5
	Total	90	

Course Objectives	1. To familiarize with various microcontrollers
	2. To understand the programming and applications of 8051 microcontrollers
	3. To learn the practical importance and applications of Microcontrollers.
	4.To introduce the concept of embedded systems and RTOS

CO No	Course Outcome
BM-602.1	Explain the Architecture of 8051 microcontroller
BM-602.2	Explain the instruction set of 8051 microcontroller
BM-602.3	Analyse 8051 programming.
BM-602.4	Describe the Interfacing techniques of I/O devices with 8051 micro controller.
BM-602.5	Describe advancements in microcontrollers and Understand the concept of embedded systems and RTOS

LEARNING OUTCOMES:

Architecture of Microcontroller 8051

1.1 List the features of micro controllers.
1.2 Compare Microprocessors and Microcontrollers
1.3 Give the details of 8051 microcontroller family of chips.
1.4 Draw the functional block diagram of 8051 microcontroller and state the function of each block
1.5 Draw the pin diagram of 8051 micro controller and specify the purpose of each pin
1.6 Explain the i)Internal memory organization of 8051 with suitable diagram
1.7 External memory organization of 8051
1.8 List various special function registers of 8051 and state their function
1.9 Explain PSW register of 8051
1.10 Explain the SFRs associated with timer/counters of 8051
1.11 Explain the modes of operations of counters & timers in 8051
1.12 List the interrupts of 8051
1.13 Explain the SFRs associated with i) Interrupts of 8051
1.14 Serial communication of 8051
1.15 List the modes of operation of serial communication with 8051
1.16 Describe various of the ports of 8051

Instruction set of 8051 micro controllers

2.1 State the need for an instruction set.
2.2 Mention the instruction format of 8051.
2.3 State the terms operation code, operand and illustrate these terms by writing an instruction
2.4 Distinguish between machine cycle and T-state.
2.5 Classify the 8051 instructions into one byte, two byte and three-byte instructions.
2.6 Classify the 8051 instructions based on their function
2.7 List the various addressing modes of 8051and explain them with examples.
2.8 Explain various i) Data transfer group of instructions of 8051 with examples
2.9 Arithmetic group of instructions of 8051with examples.
2.10 State the effect of arithmetic operations on flags of 8051 with examples.
2.11 Explain the logic instructions and recognize the flags that are set or reset for given data conditions.
2.12 List various bit manipulation instructions of 8051 and illustrate with examples
2.13 Explain i)Unconditional jump instructions of 8051
2.14 Conditional jump instructions of 8051
2.15 Explain CALL and RET instructions of 8051
2.1 State the use of NOP and HLT instructions of 8051

8051 Programming Concepts

1. List the various symbols used in drawing flow charts.
2. Write programs in 8051 assembly language to illustrate the application of data copy instructions
3. Write programs in 8051 assembly language to perform single byte and double byte addition and subtraction.
4. Write programs in 8051 assembly language which use jump instructions.
5. Write a delay subroutine to introduce time delay of given time period (in milliseconds) without using 8051 internal timer.
6. Write a program to introduce time delay of given time period (in milliseconds) using 8051 internal timer.
7. Define a subroutine and state its use.
8. Explain the sequence of program when subroutine is called and executed.
9. Explain information exchange between the program counter and the stack and identification of stack pointer register when a subroutine is called and executed.
10. Illustrate PUSH, POP instructions with an example.
11. Define the term debugging a program.
12. Explain the principles of single step and break point debugging techniques.

Interfacing Simple I/O devices

4.0 Explain the Interfacing concepts of push button switches and LEDs with 8051

4.1 Draw a diagram to connect an LED to a port pin and Write an 8051 assembly language program to blink it with a given time delay.

4.2 Interface a common cathode/anode seven segment display with 8051 and write a program to display a given decimal number

4.3 List reasons for the popularity of LCDs

4.4 State the functions of pins of 16×2 LCD module

4.5 List the instruction command codes for programming 16×2 LCD module

4.6 Explain Interfacing of 16×2 LCD module to 8051

4.7 Write an 8051 ALP to display a given message on 16×2 LCD module

4.8 Explain the Interfacing concepts of a 4x4 Matrix Key Board with 8051 with diagram

Advanced Microcontrollers

5.1 Classify PIC microcontrollers based on number of bits

5.2 State the features of CISC architecture,RISC architecture and compare them.
5.3 State the important features of PIC16F877
5.4 List i)Different versions of ARM processors (ARM7/ARM9/ARM11/CORTEX)
ii) Features of ARM7
iii)Differences between ARM7 and ARM9
5.5 Define embedded System and classify them.
5.6 Describe the concept of embedded system and give examples of embedded systems.
5.7 Compare embedded system and general computing system
5.8 Give components of Embedded Systems.
5.9 Discuss the architecture of Embedded Systems.
5.10 List i)Features of important processors used in Embedded Systems.
ii)Bus standards for serial and high speed communication.
5.11 State the need of Real Time Operating System (RTOS)
5.12 Compare Normal OS and RTOS.
5.13 List features of Real-Time Operating Systems.
5.14 Explain i)Architecture of Kernel.
ii)Task and Task scheduler.
5.15 Discuss context switching.

CO-PO/PSO MATRIX

CO No	PO1	PO2	PO3	PO4	PO5	PO6	PO7	PSO1	PSO2	PSO3
BM-602.1	3							1		
BM-602.2	3							2		
BM-602.3	2	2	1					2		
BM-602.4	2	2	1					3		
BM-602.5	3		1	1			1	3		
Average	**2.6**	**2**	**1**	**1**			**1**	**2**		

3=Strongly mapped **2=Moderately mapped** **1=Slightly mapped**

HYPONATED COURSE CONTENTS:

1. Architecture of Microcontroller 8051

Features of micro controllers, Compare Microprocessors and Microcontrollers, Block diagram of a microcomputer, block diagram of 8051 microcontroller, register structure of 8051, various special function registers, pin diagram of 8051, internal memory, external memory and ports, counters & timers in 8051, serial input/output of 8051, interrupts in 8051

2.Instruction set of 8051 micro controller

Need for an instruction set, instruction format of 8051, fetch cycle, execution cycle and instruction cycle, machine cycle and T-state.Machine language, assembly language, and mnemonics. Major groups in the instruction set, operation code, operand, data transfer, arithmetic, logical, branching and Boolean instructions, one byte, two byte and three byte instructions. Various addressing modes of 8051, unconditional and conditional jump instructions.

3. 8051 Programming Concepts

Various symbols used in drawing flow charts, flow charts for some simple problems. Programs in mnemonics to illustrate the application of data copy instructions, programs to perform single byte, double byte and multi byte addition and subtraction, the application of jump instruction in the program, program using counter techniques, subroutine, call and return instructions, PUSH, POP instructions. Single step and break point debugging techniques.

4. Interfacing of Simple I/O devices

Interfacing of push button switches and LEDs, Seven segment display interface, functions of pins of LCD, Interfacing LCD to 8051, Program LCD in assembly language, basic operations of keyboard, Interfacing of a 4x4 Matrix Key Board.

5. Advanced Microcontrollers

Study PIC micro controller family- Features- RISC Concept- Compare CISC and RISC Architecture - Features of ARM- Different versions of ARM-Embedded System- Application areas- Real Time Operating System.

REFERENCE BOOKS:

1. Mazidi and Mazidi, The 8051 Microcontroller and Embedded Systems Using Assembly and C, 2nd edition Pearson
2. Kenneth J.Ayala, 8051 Microcontroller,Cenage Learning
3. MykePredko , Programming customizing the 8051 Microcontroller,TMH
4. Ajay V Deshmukh , Microcontrollers (theory andapplications),Mc Graw Hill Education

BLUE PRINT:

Sl. No.	Unit Title	No.of Periods	Weightage Allotted	Marks Wise distribution of weightage				Question Wise distribution of weightage				COs mapped
				R	U	Ap	An	R	U	Ap	An	
1	Architecture of Microcontroller 8051	22	17	6	8	3		2	1	1		**CO1**
2	Instruction set of 8051 micro controller	20	17	6	8	3		2	1	1		**CO2**
3	8051 Programming Concepts	16	11		8	3			1	1		**CO3**
4	Interfacing Simple I/O devices	16	11		8	3			1	1		**CO4**
5	Advanced Microcontrollers	16	14	3	8	3		1	1	1		**CO5**
	HOTs question from chapters 1/3/4		10				10				1	
Total		**90**	**80**	**15**	**40**	**15**	**10**	**5**	**5**	**5**	**1**	

Table specifying the scope of syllabus to be covered for Unit test-I & Unit Test-II

Unit Test	Learning outcomes to be covered
Unit Test-I	From 1.1 to 2.14
Unit Test-II	From 3.1 to 5.15

DBME UNIT TEST-I
MODEL QUESTION PAPER (C-20)

MICROCONTROLLERS & INTERFACING (BM-602)

Time: 90 Minutes | Total Marks: 40

PART-A **16 Marks**

Instructions: (1) Answer **all** questions.
(2) First question carries four marks and each of rest carries **three** marks.
(3) Answer for Q.No.2 to 5 should be brief and straight to the point and shall not exceed ***five*** simple sentences.

1.	a. List any two features of Microcontrollers. b. Expand PSW. c. Mention any two bit manipulation instructions. d. Name the addressing mode of MOV R_1, @R_2 instruction.	R	4M	CO1, CO2
2.	Compare microprocessor and microcontroller.	U	3M	CO1
3	List the interrupts of 8051.	R	3M	CO1
4	Define operation code and operand.	R	3M	CO2
5	Mention instruction format of 8051.	R	3M	CO2

PART-B **3 x 8 = 24 marks**

Answer either (A) or (B) from each questions from part-B

Each question carries eight marks

6	(A) Draw and explain the pin diagram of 8051 microcontroller. or (B) Explain SFR's associated with serial communication of 8051.	U	8M	CO1
7.	(A) Explain data transfer group of instructions of 8051 with examples. or (B) Explain conditional jump instructions of 8051 with examples.	U	8M	CO2
8.	(A) Draw and explain the functional block diagram of 8051. OR (B) Explain CALL and RET instructions of 8051.	U	8M	CO1, CO2

C-20-BM -602

BOARD DIPLOMA EXAMINATION, (C-20)
DBME- SIXTH SEMISTER EXAMINATION
MICROCONTROLLERS & INTERFACING- (BM-602)

Time: 3Hours Total Marks: 80M

PART- A10×3M=30M

Instructions: (1) Answer all questions

(2) Each question carries three marks

(3) Answers should be brief and straight to the point and shall not exceed five simple sentences.

1.	Compare microprocessor and microcontroller.	U	3M	CO1
2.	List the interrupts of 8051.	R	3M	CO1
3	Define operation code and operand.	R	3M	CO2
4	State the use of NOP instruction in 8051.	U	3M	CO2
5	List the addressing modes of 8051.	R	3M	CO2
6	Define the term sub routine.	R	3M	CO3
7	List various special function register.	R	3M	CO3
8	List three reasons for the popularity of LCD's.	U	3M	CO4
9	State the features of CISC architecture.	U	3M	CO4
10	State the need of RTOS.	U	3M	CO5

PART-B **5 x 8 = 40 marks**

Answer either (A) or (B) from each questions from part-B

Each question carries eight marks

11	(A) Draw and explain the pin diagram of 8051 microcontroller. OR (B) Explain SFR's associated with serial communication of 8051.	U	8M	CO1
12	(A) Explain data transfer group of instructions of 8051 with examples. OR (B) Explain conditional jump instructions of 8051 with examples.	U	8M	CO2

13	(A) Write a program to introduce time relay of a given time period using 8051 internal timer. OR (B) Explain the sequence of program when subroutine is called and executed.	Ap	8M	CO3
14	(A) Explain the interfacing of 16x2 LCD module to 8051. OR (B) Write an 8051 ALP to display given message on 16x2 LCD module.	Ap	8M	CO4
15	(A) Explain architecture of kernel. OR (B) Explain task and task schedule.	U	8M	CO5

PART- C **1×10M=10M**

Instructions: (1) Answer the following questions
(2) The question carries ten marks.
(3) Answers should be comprehensive and the criterion for valuation is the content but not the length of the answer.

16	Write a program to create a square wave of 100 Hz with a duty cycle of 80% on port 1.1, using timer' 0 'in mode 1.Assume XTAL = 12 MHz.	An	10M	CO4

ADVANCED BIOMEDICAL EQUIPMENT

Course Code	Course title	No. of periods/week	Total no. of periods	Marks for FA	Marks for SA
BM-603	Advanced Biomedical Equipment	06	90	20	80

S.NO.	Unit Title	No. of Periods	COs Mapped
1	Oxygenators, Hemodialysis and OT equipment	20	CO1
2	Audiometer, and Physiotherapy Equipment	20	CO2
3	Endoscopy & Lasers	20	CO3
4	IABP and Infusion systems	15	CO4
5	Electrical safety	15	CO5
	TOTAL	**90**	

Course Objectives	1. To familiarize the students to the importance of heart-lung machine. 2. To familiarize the students to various medical equipment such as Hemodialysismachine, endoscopes, physiotherapy equipment and Intra-aortic balloonpump,Machineries in industries.

CO No		Course Outcome
CO1	**BM-603.1**	Explain the principle of Oxygenators and OT equipment
CO2	**BM-603.2**	Describe the working of Audiometer, and Physiotherapy Equipment
CO3	**BM-603.3**	Analyse the working of Endoscopy & LASER**s in medical field**
CO4	**BM-603.4**	Explain the principle of IABP and infusion systems.
CO5	**BM-603.5**	Describe the Patient Electrical safety instrumentation

Learning Outcomes

Principles, types of Oxygenators & OT equipment

1.1 Write the need for a heart – lung machine
1.2 List the qualitative requirements of an oxygenator
1.3 Explain the principle of different types of oxygenators
1.4 Explain the working principle of heart-lung Machine with a diagram
1.5 Compare the types of oxygenators
1.6 Write the need of a Haemodialysis.
1.7 Compare Haemodialysis and peritoneal dialysis
1.8 State the principle of dialyzers
1.9 Draw the block diagram of Haemodialysis machine and explain
1.10 Explain the principle of electrosurgical unit with diagram
1.11 List different techniques in ESU.
1.12 Define the common techniques in electro surgery.
1.13 List the types of voltage wave forms used in cutting & coagulation.
1.14 Explain the block diagram of a typical electrosurgical unit.
1.15 List the types of electrodes used in ESU operation.
1.16 List possible hazards and safety measures in electrosurgical procedures.

Audiometer and Physiotherapy Equipment:

2.1 Give the need for an audiometer
2.2 Explain Air and Bone conduction in audiometry.
2.3 Explain basic audiometer with diagram
2.4 List general requirements of audiometers.
2.5 Explain evoked response audiometry system with block diagram.
2.6 Explain calibration of audiometers.
2.7 List different types of hearing aids and explain them
2.8 Explain stone disease problems
2.9 Explain modern Lithotripter system
2.10 Explain extra corporeal shock wave therapy
2.11 Explain working principle of short-wave diathermy
2.12 Explain microwave diathermy
2.13 Explain principle of ultrasonic principle in diathermy.

Principle of Endoscopy & LASERS.

3.1 Explain the principle of light transmission through a fibre optic cable.
3.2 Explain the principle of a basic endoscopic system.
3.3 Name the types of endoscopes, their operations and applications.
3.4 Explain the principle of capsule endoscopy
3.5 Explain the working principle of endoscopic ultrasound system.
3.6 List the applications of capsule endoscopy and EUS.
3.7 Explain the principle of operation of laser and classify.

3.8 Explain the principle of operation of He, Ne, CO2, Ar, Ruby, Nd – YAG, eximer, and semiconductor lasers.
3.9 Compare all the above leasers.
3.10 List the applications of different lasers.

Understand the principle of IABP and infusion systems

4.1 Concept of counter pulsation
4.2 Express the need of Intra-aortic balloon pump
4.3 Explain the principle of operation of IABP
4.4 List the applications of IABP machine
4.5 Explain the principle of operation of drug delivery system
4.6 Explain the block diagram of infusion pump
4.7 List the applications of infusion and syringe pumps

Patient Electrical safety instrumentation

5.1 Explain the patient electrical safety measures
5.2 Explain the Electric shock hazards
5.3 Define Microcurrent shock and Macrocurrent shock
5.4 Compare Microcurrent shock and Macrocurrent shock
5.5 Explain the Leakage current.
5.6 List precautions to minimize Electric Hazards
5.7 Explain the safety codes for Electromedical equipment
5.8 Explain electrical safety analyzer
5.9 Explain the testing safety parameters of biomedical equipment

CO-PO/PSO MATRIX

CO No	PO1	PO2	PO3	PO4	PO5	PO6	PO7	PSO1	PSO2	PSO3
BM-603.1	3						2	1	1	3
BM-603.2	3	1	2	1			2	1	2	3
BM-603.3	3						3	1	2	3
BM-603.4	3	1	2				2	1	2	3
BM-603.5	3	1	2				3	1	3	3
Average	**3**	**1**	**2**	**1**			**2.4**	**1**	**2**	**3**

3=strongly mapped **2=moderately mapped** **1=Slightly mapped**

HYPONATED COURSE CONTENTS

1. Oxygenators, Hemodialysis and OT equipment:

Heart lung machine, types of oxygenators, dialyzers, Hemodialysis, ESU, electrodes in ESU, hazards and safety measures

2. Audiometer, and Physiotherapy Equipment:

Common tests and procedures, audiometer, hearing aids, Principle of operation, types of dialysers. Monitoring circuits for critical parameters, modern Lithotripsy system, working principle of physiotherapy equipment-short wave, microwave, and ultrasound

3. Principle of Endoscopy & LASERS.

Optic cable, types of endoscopes. Principle of production of HE, Ne, RUBY, Nd , YAG, CO_2, Ar, Kr, LASERS.

4. Intra-aortic balloon pump and infusion systems

IABP, Infusion pumps, Syringe pumps

5. Patient Electrical safety instrumentation:

patient electrical safety measures, Electric shock hazards, Microcurrent shock and Macrocurrentshock, Leakage currents, precautions to minimize Electric Hazards, safety codes for Electromedical equipment, electrical safety analyzer, testing safety parameters of biomedical equipment.

REFERENCE BOOKS

Webster, Medical Instrumentation: Application and Design, 4th edition (3 February 2009), Wiley.

R.S.Khandpur, Handbook of Biomedical Instrumentation, 3rd Edition, McGraw Hill Education.

1. N. Mohan Murali, Biomedical Instrumentation Volume-I,O.U. Press. Joseph D. Bronzino, Donald R. Peterson,The Biomedical Engineering Handbook; 4th edition (30 July 2015), , CRC Press.
2. John G. Webster,Encyclopedia of Medical Devices and Instrumentation, Set of 6 volumes, 6th edition (4 April 2006), Wiley-Interscience.

MODEL BLUE PRINT

S. No.	Unit Title	No. of periods	Weightage of marks	Marks wise Distribution of Weightage				Question wise Distribution of Weightage				COs Mapped
				R	U	Ap	An	R	U	Ap	An	
1	Oxygenators, hemodialysis and OT equipment's	20	17	9	8			3	1			CO1
2	Audiometer, and Physiotherapy Equipment	20	14	6	8			2		1		CO2
3	Endoscopy & Lasers	20	14	6	8			2		1		CO3
4	IABP and Infusion systems	15	14	6	8			2	1			CO4
5	Electrical safety	15	11	3		8		1	1			CO5
	HOTs question from chapter 1/3	--	10				10				1	
	Total	**90**	**80**	**30**	**32**	**8**	**10**	**10**	**3**	**2**	**1**	

Table specifying the scope of syllabus to be covered for Unit test-I & Unit Test-II

Unit Test	Learning outcomes to be covered
Unit Test-I	From 1.1 to 3.7
Unit Test-II	From 3.8 to 5.9

DBME UNIT TEST-I
MODEL QUESTION PAPER (C-20)
ADVANCED BIOMEDICAL EQUIPMENT (BM-603)

Time: 90 Minutes Total Marks: 40

PART-A **16 Marks**

***Instructions*:** (1) Answer **all** questions.
(2) First question carries four marks and each of rest carries **three** marks.
(3) Answer for Q.No.2 to 5 should be brief and straight to the point and shall not exceed ***five*** simple sentences.

1.	Write any four types of dialyzers	R	4M	CO1
2.	List the types of electrodes used in ESU operation.	R	3M	CO1
3	State the principle of ultrasonic diathermy	R	3M	CO2
4	Mention the need for an audiometer.	R	3M	CO2
5	List the applications of capsule endoscopy	U	3M	CO3

PART-B **3 x 8 = 24 marks**

Answer either (A) or (B) from each questions from part-B
Each question carries eight marks

6	(A) Explain the working principle of heart-lung Machine with a neat diagram OR (B) Explain the working principle of heart-lung Machine with a neat diagram.	U	8M	CO1
7.	(A) Explain evoked response audiometry system with block diagram OR (B) Explain working principle of short-wave diathermy.	U	8M	CO2
8.	(A) Explain the principle of light transmission through a fibre optic cable. OR (B) Explain the principle of operation of Basic endoscopy.	U	8M	CO3

BOARD DIPLOMA EXAMINATION, (C-20)
DBME- SIXTH SEMESTER EXAMINATION
ADVANCED BIOMEDICAL EQUIPMENT (BM-603)

Time: 3Hours Total Marks: 80

PART- A10×3M=30M

Instructions: (1) Answer all questions
(2) Each question carries three marks
(3) Answers should be brief and straight to the point and shall not exceed five simple sentences.

1.	Write the Need for a heart – lung machine	R	3M	CO1
2.	State the principle of dialyzers.	R	3M	CO1
3	List the types of electrodes used in ESU operation.	R	3M	CO2
4	Mention the need for an audiometer.	R	3M	CO2
5	State the principle of ultrasonic diathermy	U	3M	CO2
6	List the applications of different types of endoscopes.	U	3M	CO3
7	List the applications of EUS.	U	3M	CO3
8	Write the Concept of counter pulsation	R	3M	CO4
9	List the applications of infusion and syringe pumps	U	3M	CO5
10	List precautions to minimize Electric Hazards.	R	3M	CO5

PART-B **5 x 8 = 40 marks**

Answer either (A) or (B) from each questions from part-B

Each question carries eight marks

11	(A) Explain the working principle of heart-lung Machine with a neat diagram OR (B) Explain the working principle of heart-lung Machine with a neat diagram..	U	8M	CO1
12	(A) Explain evoked response audiometry system with block diagram OR (B) Explain working principle of short-wave diathermy.	U	8M	CO2
13	(A) Explain the principle of light transmission through a fibre optic cable. OR	U	8M	CO3

(B) Explain the principle of operation of Nd – YAG, semiconductor lasers.

14	(A) Explain the principle of operation of drug delivery system				
	OR	U	8M	CO4
	(B) Explain the block diagram of infusion pump.				
15	(A) Explain the testing safety parameters of biomedical equipment				
	OR	U	8M	CO5
	(B) Explain the Electric shock hazards.				

PART- C **1×10M=10M**

Instructions: (1) Answer the following question
(2) The question carries ten marks.
(3) Answers should be comprehensive and the criterion for valuation is the content but not the length of the answer.

16	In cardiac open surgery, which life supporting system is mandatory and why?	An	10M	CO3

MEDICAL IMAGING TECHNIQUES

Course Code	Course title	No. of periods/week	Total no. of periods	Marks for FA	Marks for SA
BM-604	Medical Imaging Techniques	06	90	20	80

S.NO.	Unit Title	No. of Periods	COs Mapped
1	X-ray Imaging	20	CO1
2	Fluoroscopy	12	CO2
3	CT scanning and MRI	18	CO3
4	Radionuclear imaging	20	CO4
5	Diagnostic ultrasound imaging	20	CO5
	TOTAL	**90**	

Course Objectives	1. To familiarize the students to the importance of medical imaging equipment fundamentals. 2. To familiarise the students to various Imaging equipment such as X-rays, fluoroscopy, CT-scan, MRI and ultrasound.

CO No		Course Outcome
CO1	**BM-604.1**	Explain the working of X-ray imaging
CO2	**BM-604.2**	Analyze the fluoroscopic techniques
CO3	**BM-604.3**	Explain the working principles of CT scanner and MRI scan
CO4	**BM-604.4**	Explain the concept of Radionuclides in medical imaging
CO5	**BM-604.5**	Describe the concept of diagnostic ultrasound imaging

Learning Outcomes

Understand X-ray imaging.

1.1 Explain electromagnetic spectrum with various frequencies and wave length.
1.2 List the properties of X-ray.
1.3 Explain interaction of X-ray with matter.
1.4 Describe production of X-rays.
1.5 Explain Stationary anode X-ray tube & Rotating anode X-ray tube.
1.6 Explain the principle and need for beam restriction.
1.7 Describe collimators.
1.8 Explain grids & their significance.
1.9 Explain operating principle and construction details of X-ray machine.
1.10 List the applications& limitations of X-ray imaging.
1.11 Explain dental X-ray machine

Understand X-ray fluoroscopic imaging.

2.1 Explain fluorescence procedure with block diagram
2.2 List the advantages and limitations of fluorescence.
2.3 Distinguish between fluorescence and X-ray imaging.
2.4 Express the need and construction of image intensifier.
2.5 Explain the operating principle of angiography
2.6 List the applications of angiograph.
2.7 Explain the Working of Digital Substraction Angiography
2.8 List the applications of Digital Substraction Angiography

Understand CT& MRI procedure

3.1 Discuss the principle of CT
3.2 Explain various CT generations
3.3 Explain CT machine in detail
3.4 Explain Image qualities considered in reconstructing the CT image.
3.5 Explain various CT image reconstructing methods.
3.6 Explain various types of detectors used in CT machine.
3.7 Identify advantages of CT over X-ray imaging.
3.8 List limitations & applications of CT imaging.
3.9 Explain principle of NMR
3.10 List the application and advantages of MR imaging.
3.11 Identify the limitations of MRI.

Apply Radioactivity in Imaging:

4.1 Recall the physics of radioactivity.
4.2 Apply radionuclide isotopes in medical diagnosis.
4.3 Name and define the units of radioactivity.
4.4 Explain the interaction of radionuclide elements with matter.
4.5 Explain thermo luminescent dosimeter with diagram.
4.6 Explain the working of film badge with diagram.
4.7 Explain the principle and working of GM counter.
4.8 Explain the working of Ionization chamber.
4.9 Explain the working of Gamma camera with a block diagram.
4.10 Explain single photon emission computed tomography (SPECT).
4.11 Explain positron emission tomography (PET).
4.12 List the applications and advantages of PET.

Apply ultrasonic principles:

5.1 Define piezoelectric effect.
5.2 Explain characteristic impedance and resolution
5.3 Explain the generation and detection of ultra sound.
5.4 List different types of transducers.
5.5 Explain A-scan, B-scan and M-scan modes
5.6 List the applications of A, B, and M-scans.
5.7 Explain the block diagram of basic pulse echo system& echo cardiograph.
5.8 List the advantages & applications of echo cardio graph.
5.9 Explain the principle and application of echo encephalography.
5.10 Explain ultrasonic blood flow meter with diagram.
5.11 Explain the principle of doppler effect.
5.12 Explain the biological effects of ultrasound & list the limitations of ultrasound

CO-PO/PSO MATRIX

CO No	PO1	PO2	PO3	PO4	PO5	PO6	PO7	PSO1	PSO2	PSO3
BM-604.1	3				1		1	2	2	3
BM-604.2	3	1	2				1	2	3	3
BM-604.3	3				1		1	2	2	3
BM-604.4	3	1	2	1			1	2	3	3
BM-604.5	3	1	2		1		1	2	2	3
Average	**3**	**1**	**2**	**1**	**1**		**1**	**2**	**3**	**3**

3=Strongly mapped 2=Moderately mapped 1=Slightly mapped

HYPONATED COURSE CONTENTS

1.0 X– ray imaging

Electromagnetic spectrum, properties of X-rays, interaction of x-rays with matter production of X-rays, stationary and rotating anode X-ray tubes, beam restrictors, X-ray machine, grids& collimators

2.0 Fluoroscopy

Fluorescence, fluoroscopic procedure, image intensifiers, angiography, DSA

3.0 Computed Tomography & MRI imaging

Principle of CT, various generations of CT machines, types of detectors, image reconstruction techniques, applications of CT. Principle of NMR, applications, advantages and limitations of MRI.

4.0 Radionuclide imaging

Physics of radioactivity, interaction of radionuclide elements with matter, thermoluminescent dosimeter, GM counter, Ionization chamber, Gamma camera, PET and SPECT

5.0 Ultrasonic imaging

Piezo electric effect, characteristic impedance& resolution, principles, generation and detection of ultrasonic waves, different types of transducers, A,B,M modes of scanners, applications. Basic pulse echo system, echo cardiograph. Echo encephalography, applications. Blood flow meter, Doppler effect, biological effects and limitations of ultra sound.

REFERENCE BOOKS

1. Webster, Medical Instrumentation: Application and Design, 4th edition (3 February 2009), Wiley.
2. R.S.Khandpur, Handbook of Biomedical Instrumentation, 3rd Edition, McGraw Hill Education.
3. N. Mohan Murali, Biomedical Instrumentation Volume-I,O.U. Press.
4. Joseph D. Bronzino, Donald R. Peterson,The Biomedical Engineering Handbook; 4th edition (30 July 2015), , CRC Press.
5. John G. Webster,Encyclopedia of Medical Devices and Instrumentation, Set of 6 volumes,6th edition (4 April 2006),Wiley-Interscience.

MODEL BLUE PRINT

S. No.	Unit title	No. of periods	Weightage of marks	Marks wise Distribution of Weightage				Question wise Distribution of Weightage				COs Mapped
				R	U	Ap	An	R	U	Ap	An	
1	X-ray Imaging	20	20	12		8		4		1		CO1
2	Fluoroscopy	15	11	3	8			1	1			CO2
3	CT Scanning and MRI	20	14	6	8			2	1			CO3
4	Radionuclear Imaging	15	11	3	8			1	1			CO4
5	Ultrasound Equipment	20	14	6	8			2	1			CO5
	HOTs question from chapter 1/2/3/4/5	--	10				10				1	
	Total	**90**	**80**	**30**	**32**	**8**	**10**	**10**	**4**	**1**	**1**	

Table specifying the scope of syllabus to be covered for Unit test-I & Unit Test-II

Unit Test	Learning outcomes to be covered
Unit Test-I	From 1.1 to 3.5
Unit Test-II	From 3.6 to 5.12

DBME UNIT TEST-I
MODEL QUESTION PAPER (C-20)
MEDICAL IMAGING TECHNIQUES (BM-604)

Time: 90 Minutes Total Marks: 40

PART-A 16 Marks

***Instructions*:** (1) Answer **all** questions.
(2) First question carries four marks and each of rest carries **three** marks.
(3) Answer for Q.No.2 to 5 should be brief and straight to the point and shall not exceed ***five*** simple sentences.

	List the properties of X-ray.	R	4M	CO1
2.	Distinguish between fluorescence and X-ray imaging	R	3M	CO1
3	State the principle of angiography	R	3M	CO2
4	List the applications of CT	R	3M	CO2
5	List the uses of radionuclides.	u	3M	CO3

PART-B 3 x 8 = 24 marks

Answer either (A) or (B) from each questions from part-B
Each question carries eight marks

6	(A) Explain operating principle and construction details of X-ray machine. (Or) (B) Explain the rotating anode X-ray tube.	U	8M	CO1
7.	(A) Explain the block diagram of fluoroscopy. (Or) (B) Explain the image intensifier.	U	8M	CO2
8.	(A) Explain various CT generations (Or) (B) Explain CT machine in detail	U	8M	CO3

BOARD DIPLOMA EXAMINATION, (C-20)
DBME- SIXTH SEMESTER EXAMINATION
MEDICAL IMAGING TECHNIQUES (BM-604)

Time: 3Hours Total Marks: 80

PART- A 10×3M=30M

Instructions: (1) Answer all questions
(2) Each question carries three marks
(3) Answers should be brief and straight to the point and shall not exceed five simple sentences.

1.	List the properties of X-ray.	R	3M	CO1
2.	Distinguish between fluorescence and X-ray imaging	U	3M	CO1
3	State the principle of angiography	R	3M	CO2
4	List the applications of CT	R	3M	CO2
5	List the limitations of MRI	R	3M	CO3
6	Write the applications of MRI	R	3M	CO3
7	List the applications PET.	U	3M	CO4
8	State the principle of thermo luminescence.	U	3M	CO4
9	Define piezoelectric effect	U	3M	CO4
10	List the applications of A, B, and M-scan modes.	R	3M	CO4

PART-B 5 x 8 = 40 marks

Answer either (A) or (B) from each questions from part-B
Each question carries eight marks

11	(A) Explain operating principle and construction details of X-ray machine. OR (B) Explain the rotating anode X-ray tube.	U	8M	CO1
12	(A) Explain the block diagram of fluoroscopy OR (B) Explain the image intensifier.	U	8M	CO2

13	(A) Explain various CT generations OR (B) Explain CT machine in detail.	U	8M	CO3
14	(A) Explain thermo luminescent dosimeter with diagram. OR (B) Explain positron emission tomography (PET).	U	8M	CO4
15	(A) Explain the block diagram of basic pulse echo system. OR (B) Explain the block diagram echocardiography.	U	8M	CO5

PART- C **1×10M=10M**

Instructions: (1) Answer the following question
(2)The question carries ten marks.
(3) Answers should be comprehensive and the criterion for valuation is the content but not the length of the answer.

16	Which among a) photo electric effect & b) Compton scattering is used as a part of primary EM radiation interaction in soft tissue diagnostic x-ray imaging & justify.	An	10M	CO3

BIO MEDICAL SIGNAL PROCESSING

Course Code	Course title	No. of periods/week	Total no of periods	Marks for FA	Marks for SA
BM-605	BIO MEDICAL SIGNAL PROCESSING	6	90	20	80

S. No.	Unit Title	No. of Periods	COs Mapped
1	Analog and Discrete Signals	25	CO1
2	Classical spectral Estimation Techniques	13	CO2
3	EEG signal processing, Parametric modelling & Adaptive filters	20	CO3
4	ECG signal processing & Prony's method	20	CO4
5	Data compression and Reconstruction	12	CO5
	Total	**90**	

Course Objectives	1. To Apply DFT for analysis of digital signals and systems
	2. To Implement different filters on biomedical signals analyze their spectral components.
	3. To Identify physiological interferences and artifacts effecting ECG signals.

CO No		Course Outcome
CO1	**BM-605.1**	Apply concepts of Analog Signals and Discrete Signals in signal processing
CO2	**BM-605.2**	Analyze Discrete Fourier transform.
CO3	**BM-605.3**	Apply parametric modeling in EEG, Adaptive filters in ECG & EEG signal Processing.
CO4	**BM-605.4**	Analyze ECG signal processing using Prony's method
CO5	**BM-605.5**	Explain Data compression and Reconstruction techniques

LEARNING OUTCOMES:

Apply concepts of Analog Signals and Discrete Signals in signal processing

1.1. Definition and classification of signals& systems
1.2. Explain Signal representation by continuous exponentials & generalized exponentials.
1.3. Definition of Fourier transform & Laplace transform.
1.4. List the properties of Fourier transform & Laplace transform.
1.5. Restate the Existence of Fourier transform
1.6. Explain Sampling theorem
1.7. Explain the sampling basics
1.8. Explain simple biomedical signal conversion systems
1.9. List Conversion requirements for biomedical signals.
1.10. State the importance of digital filters in biomedical signal processing
1.11. Explain the Elements of a digital filter

Analyze Discrete Fourier transform

2.1 Definition of Discrete Fourier transform (DFT)
2.2 Explain Computation of DFT
2.3 Explain Decimation in time (4-DIT) FFT Algorithm
2.4 Explain Decimation in frequency (4-DIF) FFT Algorithm
2.5 Explain Decimation in time (8-DIT) FFT Algorithm
2.6 Explain Decimation in frequency (8-DIF) FFT Algorithm

Apply parametric modeling in EEG, Adaptive filters in ECG & EEG signal processing

3.1 Explain the EEG signals &it's characteristics
3.2 Explain Automation of EEG signals
3.3 Explain the Linear Prediction & Autoregressive (AR) methods
3.4 Explain AR modeling of Seizure EEG
3.5 Explain AR modeling of ECG signals
3.6 Explain Principle of Adaptive noise cancelling
3.7 Analyze ANC principle in ECG monitoring
3.8 Analyze ANC principle in fetal ECG monitoring
3.9 Application of ANC principle in EEG monitoring

Analyze ECG signal processing using Prony's method

4.1 Explain the Power spectrum of ECG
4.2 Explain the QRS detection Techniques
  a) Differentiation technique
  b) Template matching technique
4.3 Explain the QRS detection algorithm
4.4 Explain the Automated ECG analysis
4.5 Analyze ST segment in ECG
4.6 Define Prony's Method
4.7 Explain the Summarizing steps of original Prony's method
4.8 Analysis of heart valve sounds using Prony's method

Understand Data compression and Reconstruction

5.1 Mention about Data reduction techniques
5.2 Explain the Basics of Signal Averaging
5.3 Definition of PRD
5.4 Explain Turning point algorithm with flow chart
5.5 Explain AZTEC Algorithm with flow chart
5.6 Explain CORTES algorithm with flow chart.
5.7 Reconstruction of AZTEC data
5.8 Reconstruction of CORTES data with example

CO-PO/PSO MATRIX

CO No	PO1	PO2	PO3	PO4	PO5	PO6	PO7	PSO1	PSO2	PSO3
BM-605.1	3		2				1	2		3
BM-605.2	3	1	2					2		3
BM-605.3	3			1			1	2		3
BM-605.4	3	1	2					2		3
BM-605.5	3	1	2				1	2		3
Average	**3**	**1**	**2**	**1**				**2**		**3**

3=Strongly mapped **2=Moderately mapped** **1=Slightly mapped**

HYPONATED COURSE CONTENTS

1. Analog Signals

Definition and classification of various signals and systems, signal representation by continuous exponentials, direct and inverse Fourier transforms, continuous, existence and properties of Fourier transforms, signal representation by generalized exponentials, the Laplace transform, properties of Laplace transform,Discrete signals.

2. Classical Spectral Estimation Techniques: Definition of DFT, FFT, decimation in time and frequency algorithms, ,and it's biomedical applications

3. EEG signal processing: Parametric modeling, Adaptive filters signals, Automation of EEG, AR Modeling, Adaptive noise cancellation principle, and it's biomedical applications

4. ECG Signal Processing & Prony's method: Preprocessing, QRS detection method, Automated ECG analysis Arrhythmia detection algorithm, Original Prony's method, and it's biomedical applications

5. Data compression & Reconstruction

Data reduction algorithms – AZTEC, TP and CORTES algorithms.

REFERENCE BOOKS

1. Willis J. Tompkins,Biomedical digital signal processing, PHI
2. Alan v. Oppenheim and Ronald W. Schafar,Digital Signal processing,PHI
3. B.P. Lathi,Signals, system and communications, BS publications
4. Oppenheim and Will sky,Signals and systems,PHI
5. Matin Akay, Biomedical digital signal processing, Academic press
6. D.C Reddy**,** Biomedical Signal Processing,MGH

BLUE PRINT:

Sl. No.	Unit Title	No. of Periods	Weightage Allotted	Marks Wise distribution of weightage				Question Wise distribution of weightage				COs mapped
				R	U	Ap	An	R	U	Ap	An	
1	Analog and Discrete Signals	25	14	3	8	3		1	1	1		CO1
2	Classical spectral Estimation Techniques	13	14	3	8	3		1	1	1		CO2
3	EEG signal processing, Parametric modeling& Adaptive filters	20	14	3	8	3		1	1	1		CO3
4	ECG signal processing & Prony's method	20	14	3	8	3		1	1	1		CO4
5	Data compression and Reconstruction	12	14	3	8	3		1	1	1		CO5
	HOTs question from 2/3/ 4/5 Chapters		10				10				1	
Total		**90**	**80**	**15**	**40**	**15**	**10**	**5**	**5**	**5**	**1**	

Table specifying the scope of syllabus to be covered for Unit test-I & Unit Test-II

Unit Test	Learning outcomes to be covered
Unit Test-I	From 1.1 to 3.5
Unit Test-II	From 3.6 to 5.8

DBME UNIT TEST-I
MODEL QUESTION PAPER (C-20)
BIOMEDICAL SIGNAL PROCESSING (BM-605)

Time: 90 Minutes Total Marks: 40

PART-A 16 Marks

***Instructions*:** (1) Answer **all** questions.
(2) First question carries four marks and each of rest carries **three** marks.
(3) Answer for Q.No.2 to 5 should be brief and straight to the point and shall not exceed ***five*** simple sentences.

1.	Write any four properties of Fourier transforms	R	4M	CO1
2.	Definition of Laplace transform	R	3M	CO1
3	Definition of Discrete Fourier transforms (DFT).	R	3M	CO2
4	Draw Decimation in time (4-DIT) FFT Algorithm.	R	3M	CO2
5	Write the EEG signals & its characteristics.	u	3M	CO3

PART-B 3 x 8 = 24 marks

Answer either (A) or (B) from each questions from part-B
Each question carries eight marks

6	(A) Explain Signal representation by continuous exponentials OR (B) Explain simple biomedical signal conversion systems	U	8M	CO1
7.	(A) Explain Decimation in frequency (8-DIF) FFT Algorithm. OR (B) Explain Decimation in frequency (4-DIF) FFT Algorithm.	U	8M	CO2
8.	(A) Explain the Linear Prediction methods. OR (B) Explain the Autoregressive (AR) methods.	U	8M	CO3

BOARD DIPLOMA EXAMINATION, (C-20)
DBME- SIXTH SEMESTER EXAMINATION
BIOMEDICAL SIGNAL PROCESSING (BM-605)

Time: 3Hours Total Marks: 80

PART- A10×3M=30M

Instructions: (1) Answer all questions
(2) Each question carries three marks
(3) Answers should be brief and straight to the point and shall not exceed five simple sentences.

1.	Definition and classification of signals	R	3M	CO1
2.	Definition of Laplace transform	U	3M	CO1
3	Definition of Discrete Fourier transform (DFT).	R	3M	CO2
4	Draw Decimation in time (4-DIT) FFT Algorithm.	R	3M	CO2
5	Write the EEG signals &its characteristics.	R	3M	CO3
6	List the Linear Prediction & Autoregressive (AR) methods.	R	3M	CO3
7	Define Prony's Method.	U	3M	CO4
8	List the QRS detection Techniques.	U	3M	CO4
9	Mention about Data reduction techniques.	U	3M	CO4
10	List the Basics of Signal Averaging.	R	3M	CO4

PART-B **5 x 8 = 40 marks**

Answer either (A) or (B) from each questions from part-B
Each question carries eight marks

11	(A) Explain Signal representation by continuous exponentials OR (B) Explain simple biomedical signal conversion systems.	U	8M	CO1
12	(A) Explain Decimation in frequency (8-DIF) FFT Algorithm. OR (B) Explain Decimation in frequency (4-DIF) FFT Algorithm.	U	8M	CO2
13	(A) Explain Principle of Adaptive noise cancelling. OR (B) Explain the Linear Prediction & Autoregressive (AR) methods.	U	8M	CO3

14	(A) Explain the Automated ECG analysis OR (B) Explain the Summarizing steps of original Prony's method.	U	8M	CO3
15	(A) Explanation of CORTES algorithm with flow chart . OR (B) Explain AZTEC Algorithm with flow chart.	U	8M	CO3

PART- C **1×10=10**

Instructions: (1) Answer the following question
(2)The question carries ten marks.
(3) Answers should be comprehensive and the criterion for valuation is the content but not the length of the answer.

16	Why DFT is applied for image processing and how it is processed?	An	10M	CO3

MICROCONTROLLERS &INTERFACING LAB PRACTICE

Course Code	Course title	No of periods/week	Total no. of periods	Marks for FA	Marks for SA
BM -606	Microcontrollers & Interfacing Lab Practice	3	45	40	60

S. No.	Unit Title	No. of Periods	COs Mapped
1	Familiarization with Keil software and Microcontroller Kit	04	CO1
2	Basic programming using Microcontroller kit/Keil	20	CO2
3	Interfacing IO devices with 8051	10	CO3
4	Application development using proteus	06	CO4
5	Dumping/Burning into Microcontroller	05	CO5
	Total	**45**	

Course Objectives	1. To familiarize with 8051 Microcontroller kit and Keil complier
	2. To understand the programming and interfacing concepts of 8051 Microcontroller
	3. To learn the practical importance and applications of programming and interfacing of 8051 Microcontroller.

CO No		Course Outcome
CO1	**BM-606.1**	Use of 8051 Microcontroller kit and Keil Compiler.
CO2	**BM-606.2**	Apply Instruction set of 8051 Microcontroller in AL programs
CO3	**BM-606.3**	Apply Instruction set of 8051 Microcontroller for interfacing of I/O devices
CO4	**BM-606.4**	Simulate Interfacing circuits using Proteus
CO4	**BM-606.5**	Conductthe burning of firmware into Microcontroller chip

LEARNING OUTCOMES:

1. Familiarization with Microcontroller Kit & Simulators

i. Familiarize with 8051 Microcontroller Kit
ii. Familiarize with 8051 simulator KEIL (or similar software)

2. Basic programming using Microcontroller kit/Keil

i. Write an ALP to perform Block move - 10bytes of data from 0X30-0X39 to 0X40-0X49
ii. Write an ALP to perform Block exchange – 10bytes of data between 0X30-0X39 to 0X40-0X49
iii. Write an ALP to perform: Addition , subtraction , division and multiplication of two 8 bit numbers
iv. Write an ALP to perform addition of two16-bit numbers
v. Write an ALP to perform subtraction of two16-bit numbers
vi. Write an ALP to the find Smallest/Largest number in 10bytes of data stored from 0X30 to 0X39 and store the result in the next location i.e., 0X3A
vii. Write an ALP to find the 2's complement of given 8-bit number

3. To practice Interfacing Techniques

i. Write a program to make an LED connected to port pin P1.5, light up for specific time on pressing a switch connected to port pin P2.3
ii. Write a Program to make an LED connected to pin P1.7 to blink at a specific rate
iii. Interface a 7 segment LED display with 8051 microcontroller and write a program to display a given decimal digit
iv. Interface a small DC motor with 8051 and write a program to rotate the motor in clockwise/anti clockwise direction

4. Application development using proteus

i. Familiarization with PROTEUS software
ii. Perform experiments given in 10 and 11 above using PROTEUS

5. Dumping/Burning into Microcontroller

i. Perform burning/loading of .HEX file of experiments given in 10and 11 above into flash memory for 89C51 and test it in development kit

CO-PO/PSO MATRIX

CO No	PO1	PO2	PO3	PO4	PO5	PO6	PO7	PSO1	PSO2	PSO3
BM-606.1	3						1	1		
BM-606.2	3	2						3		
BM-606.3	2	2	1					3		
BM-606.4	2	2	1					3		
BM-606.5	3		1	1			1	2		
Average	**2.6**	**2**	**1**	**1**			**1**	**2.4**		

3=Strongly mapped 2=Moderately mapped 1=Slightly mapped

BIO-MEDICAL EQUIPMENT LAB PRACTICE

Course Code	Course title	No of periods/week	Total no of periods	Marks for FA	Marks for SA
BM-607	BIO-MEDICAL EQUIPMENT LAB PRACTICE	3	45	40	60

S No	Unit Title	No. of Periods	COs Mapped
1	Cardiology equipment's	9	CO1
2	Physiotherapy equipment	6	CO2
3	Electrosurgical units	6	CO3
4	X-ray machine	6	CO4
5	Ultrasound scanner	6	CO5
6	Audiometers, Hemo dialysis machine and flexible endoscopes	12	CO6
	TOTAL	**45**	

Course Objectives	1. To familiarize hands on training on measurement of physiological parameters
	2. Understand different types and uses of diathermy units
	3. Know ultrasound imaging technique and its use in diagnosis.

CO No		Course Outcome
CO1	**BM-607.1**	Identify the Cardiology equipment
CO2	**BM-607.2**	Demonstrate Physiotherapy equipment
CO3	**BM-607.3**	Demonstrate Electrosurgical unit
CO4	**BM-607.4**	Demonstrate the working of X-ray machine
CO5	**BM-607.5**	Demonstrate the working of Ultrasound scanner
CO6	**BM-607.6**	Use ofAudiometer, Hemodialysis machine and flexible endoscopes

LEARNING OUTCOMES:

1.0 Cardiology Equipment

1.1 To observe different heart sounds using Phonocardiogram

a) Familiarization with PCG
b) Principle of PCG
c) Identify transducer type
d) Make connections.
e) Measuring heart sounds at different frequencies.

1.2 To demonstrate the working principle of Defibrillator

a) To understand the working of defibrillators.
b) Principle of defibrillator
c) Connect dummy subject to defibrillator.
d) Identify types of electrode.
e) Identify abnormalities
f) Conversion of abnormal to normal by applying various energies using defibrillator.

1.3 To measure the blood pressure using Sphygmomanometer

a) Identify the parts of the instrument
b) Principle of Korotkoff sounds
c) Placing the cuff on the subject
d) Measuring the blood pressure at various conditions, on different subjects

1.4 To observe the ECG wave form in bedside monitor and ECG Recorder.

1.5 To demonstrate the working of Heart lung machine

a) Naming components of heart-lung machine.
b) Know the functions of all components of heart lung machine.

2.0 Physiotherapy Equipment

2.1 To observe the effect of the Shortwave diathermy on subject

a) Familiarization with short wave diathermy.
b) Principle of short-wave diathermy
c) Identify electrodes
d) Measuring the amount of current and time durations

2.2 To observe the effect of Ultrasound diathermy on subject

2.3 To measure the nerve conduction velocity using Nerve and muscle stimulator

2.4 To record the Electromyogram signal at various muscles.

3.0 Electrosurgical unit

3.1 To observe different ESU techniques

a) Familiarization with ESU.
b) Principle of ESU.
c) Identifications of different types of electrodes for ESU.
d) Identify different types of switches.
e) Connect patient plate.
f) Perform different techniques on subject using ESU.
g) Safety precautions.

4.0 X-Ray machine

4.1 To demonstrate the working of portable X-ray machine.

a) Familiarization with various controls.
b) Principle of X-ray
c) Different accessories used in dark room.
d) Analyze the circuit connections
e) Adjusting of KVA, MA and time of exposure for different positions and organs.
f) Safety precautions (Maximum permissible dose)
g) Loading film in cassette
h) Image intensifier.

4.9 Ultrasound scanner

4.10 To demonstrate the Ultrasound scanning machine.

6.0 Audiometers, Hemodialysis machine and flexible endoscopes

6.1 To demonstrate the various types of Flexible and Rigid endoscopes.
6.2 To demonstrate the Hemodialysis machine model.
6.3 To study the Types of audiometers and masking principles.

CO-PO/PSO MATRIX

CO No	PO1	PO2	PO3	PO4	PO5	PO6	PO7	PSO1	PSO2	PSO3
BM-607.1	3						2	2	1	3
BM-607.2	3	1	2				2	2	1	3
BM-607.3	3	1					2	2	1	3
BM-607.4	3			1			2	2	1	3
BM-607.5	3		2	1	1		2	2	1	3
BM-607.6	3				1		2	2	1	3
Average	**3**	**1**	**2**	**1**	**1**		**2**	**2**	**1**	**3**

3=Strongly mapped **2=Moderately mapped** **1=Slightly mapped**

BIO-MEDICAL SIGNAL PROCESSING LABPRACTICE

Course code	Unit title	No. of periods/ week	Total no. of periods	Marks for FA	Marks for SA
BM-608	Bio-medical signal processing lab Practice	03	45	40	60

S. NO.	Unit Title	No. of Periods	COs Mapped
1	Acquaintance with matlab software & signal processing toolbox	**10**	CO1
2	Familiarization with signal processing toolbox with various examples	**25**	CO2
3	Practicing compression algorithms	**10**	CO3
	TOTAL	**45**	

Upon completion of the course the student shall be able to	
Course Objectives	1.Acquaintance with matlab software & signal processing toolbox 2.Familiarization with signal processing toolbox with various examples 3.Practicing compression algorithms

CO No		Course Outcome
CO1	**BM-608.1**	Demonstrate basics of MAT LAB, with signal processing toolbox
CO2	**BM-608.2**	Generate of sine, cosine triangular, square and exponential waves by using MAT LAB
CO3	**BM-608.3**	Generate of signal Averaging by using MATLAB
CO4	**BM-608.4**	Generate of ECG and Noisy ECG
CO4	**BM-608.5**	Programming on data compression techniques 1) AZTEC,2) TP by using MATLAB

Learning Outcomes

1.0 **Acquaintance with MATLAB software & signal processing toolbox**

1.1 Acquaintance with MATLAB software

1.2 Familiarization with signal processing toolbox

2.0 Familiarization with signal processing toolbox with various examples

2.1 Generation of sine &cosine waves

2.2 Generation of square &triangular waves

2.3 Generation of exponentials

2.4 Generation of logarithmic functions

2.5 Signal averaging

2.6 Generation of ECG

2.7 Generation of noisy ECG

2.8 Filtering an ECG signal from sinusoidal noise trend removal or noise less ECG

2.9 FFT of corrupted ECG signal

3.0 Practicing compression algorithms

3.1 Data compression using AZTEC algorithm

3.2Data compression using TP algorithm

CO-PO/PSO MATRIX

CO No	PO1	PO2	PO3	PO4	PO5	PO6	PO7	PSO1	PSO2	PSO3
BM-608.1	3				1		3	2	1	3
BM-608.2	3	2			1		3	2	1	3
BM-608.3	2	2	1		1		3	2	1	3
BM-608.4	2	2	1		1		3	2	1	3
BM-608.5	3		1	1	1		3	2	1	3
Average	**2.6**	**2**	**1**	**1**	**1**		**3**	**2**	**1**	**3**

3=Strongly mapped **2=Moderately mapped** **1=Slightly mapped**

BIOMEDICAL CIRCUITS DESIGN & SERVICING LAB PRACTICE

Course code	Course title	No. of periods/ week	Total no. of periods	Marks for FA	Marks for SA
BM-609	BIOMEDICAL CIRCUITS DESIGN & SERVICING LAB PRACTICE	03	45	40	60

S. NO.	Major Topics	No. of Periods	COs Mapped
1	Biomedical circuit design	**20**	CO1
2	Biomedical equipment servicing and troubleshooting	**25**	CO2,CO3
	TOTAL	**45**	

Upon completion of the course the student shall be able to	
Course Objectives	1.To familiarize the practical knowledge on various types of biomedical equipments-circuit design, service and troubleshooting.

CO No		Course Outcome
CO1	**BM-609.1**	To familiarize the practical knowledge on various types of biomedical equipments- circuit design, service and trouble shooting.
CO2	**BM-609.2**	Student able to design power supply, isolation amplifiers and feedback amplifiers.
CO3	**BM-609.3**	To know how to troubleshooting and servicing of ECG, defibrillator, ESU and bedside machine
CO4	**BM-609.4**	Min iproject.

Learning Outcomes

1.0 BIOMEDICAL CIRCUIT DESIGN LAB

1.1 Design of Power Supply.
1.2 Design of Isolation Amplifier
1.3 Design of circuits like oscillators, amplifiers etc.
1.4 Design of Feedback circuits.
1.5 Design of Electronic Stethoscope

2.0 BIOMEDICAL SERVICING LAB

2.1Trouble shooting and servicing of ECG Machine
2.2Trouble shooting and servicing of Defibrillator
2.3Trouble shooting and Servicing of ESU machine
2.4Trouble shooting and servicing of Bed side monitor
2.5Mini project.

CO-PO/PSO MATRIX

CO No	PO1	PO2	PO3	PO4	PO5	PO6	PO7	PSO1	PSO2	PSO3
BM-609.1	3				1		3	2	1	3
BM-609.2	3	2			1		3	2	1	3
BM-609.3	2	2	1		1		3	2	1	3
BM-609.4	2	2	1		1		3	2	1	3
Average	**2.6**	**2**	**1**	**1**	**1**		**3**	**2**	**1**	**3**

3=Strongly mapped **2=Moderately mapped** **1=Slightly mapped**

VII SEMESTER

INDUSTRIAL TRAINING (Hospital/Industry)

Course Code	Course title	No of periods/week	Duration	Marks for FA	Marks for SA
BM-701	INDUSTRIAL/HOSPITAL TRAINING (Hospital/Industry)	42	6 months	240	60

Time schedule

S.NO	Code	TOPICS	Duration
1	**BM-701**	• Practical training in Industry • Training Report Preparation Report Preparation: Title Page, Certificate, Acknowledgements, Abstract, Contents(introduction of Industry, Plant Layout, Organization Chart, List of Major Equipments, List of Processes: Skills Acquired; Conclusions; References	Six Months

Course Objectives and Course Outcomes

Upon completion of the course the student shall be able to		
Course Objectives		1.Expose to real time working environment 2. Enhance knowledge and skill already learnt in the institution. 3. Acquire the required skills of manufacturing processes, assembling, servicing, supervising in the engineering fields. 4. Install the good qualities of integrity, responsibility and self confidence.
COURSE OUT COMES	CO1	Apply theory to practical work situations
	CO2	Cultivate sense of responsibility and good work habits
	CO3	Exhibit the strength, teamwork spirit and self-confidence
	CO4	Write report in technical projects

PO-CO Mapping

	PO1	PO2	PO3	PO4	PO5	PO6	PO7	PSO1	PSO2	PSO3
CO1	2				2		1	3		2
CO2						3		3		2
CO3						3		3		2
CO4						3		3		2

3: High, 2: Moderate,1: Low

Learning Outcomes

The student shall be able to display the following skill sets

1) Technical Skills *(*Manufacturing/Service/Drafting/Maintenance etc)
2) Reading drawings and analysing Specifications
3) Recognize and Practice safety Measures
4) Handling Tools/Instruments/Materials/Machines
5) Assess and Control of quality parameters
6) Planning, Organizing and recording Skills

Scheme of evaluation

SI. No.	*Course*	*Duration*	*Scheme of evaluation*		
			Item	*Nature*	*Max. Marks*
1	*Industrial Training*	*6 months*	*1.First Assessment at Industry (After 12 Weeks)*	*Assessment of Learning outcomes by both the faculty and training Mentor of the industry*	*120*
			2.Second Assessment at the Industry (After 22 weeks)	*Assessment of Learning outcomes by both the faculty and training Mentor of the industry*	*120*
			Final Summative assessment at institution level	*Training Report*	*20*
				Demonstration of any one of the skills listed in learning outcomes	*30*
				Viva Voce	*10*
TOTAL MARKS					*300*

Weightage of marks for Assessment of Skill sets during first and second assessment.

Skill Set Sl.No	*SKILL SET*	*Max Marks Allotted For each parameter*
1	*Assembling and Disassembling the medical equipment with proper tools*	*20*
2	*Installation, Demonstration and Calibration of Medical Equipment.*	*25*
3	*Troubleshooting the problem of medical equipment.*	*30*
4	*Maintenance of Medical equipments as per the manufacture's schedule.*	*15*
5	*Soft skills*	*15*
6	*Reporting skills*	*15*
	Total	*120*

During assessment the performance of the students shall be assessed in those skills in which the student has been trained and be awarded the marks as per the weightage assigned as above. In case the student has undergone training in a few skill sets then the total marks obtained shall be raised to 120 marks for the given assessment i.e. either assessment 1 or 2. However the performance of the student shall be assessed at the most skill sets listed above but not less than three skill sets.

Illustration

If the student has undergone training in only 4 skill sets (namely serial number 1, 3, 4, 5 of above skill sets) and marks awarded during assessment is 50 out of 80 marks, then the marks of 50 shall be enhanced to 120 proportionately as (50/80)*120=75.

GUIDELINES FOR INDUSTRIAL TRAINING

1. Duration of the training: 6 months.
2. Eligibility: The As per SBTET norms
3. Training Area: Students may be trained in the fields Fabrication/Foundry/Manufacturing/Service/Drafting/Maintenance etc.
4. The candidate shall put a minimum of 90% attendance during Industrial Training.
5. If the student fails to secure 90% attendance during industrial training, the student shall reappear for 6 months industrial training.
6. Formative assessment at industry level shall be carried out by the Mentor from of the industry, where the student is undergoing training and the faculty in charge (Guide) from the concerned section in the institution.
7. The Industrial training shall carry 300 marks and pass marks is 50% in assessments at industry (first and second assessment) and final summative assessment at institution level put together i.e. 150 marks out of 300 marks.
8. If the student fails to secure 50% marks in final summative assessment at institution level, the student should reappear for final summative assessment in the subsequent board examination.
9. Final Summative assessment at institution level is done by a committee including 1.Head of the section (of concerned discipline only), 2. External examiner from an industry and 3. Faculty member who assessed the students during Industrial Training as members.

Guidelines and responsibilities of the faculty members who are assessing the students performance during industrial training:

- Shall guide the students in all aspects regarding training.
- Shall create awareness regarding safety measures to be followed in the industry during the training period, and shall check it scrupulously.
- Shall check the logbook of the students during the time of their visit for the assessment.
- Shall monitor progress at regular intervals and make appropriate suggestions for improvement.
- Shall visit the industry and make first and second assessments as per stipulated schedules.
- Shall assess the skill sets acquired by the students during their assessment.
- Shall award the marks for each skill set as per the marks allotted for that skill set during 1st and 2nd assessments
- Shall voluntarily supplement students learning through appropriate materials like photographs, articles, videos etc.
- Shall act as co-examiner along with other examiners in the final assessment at institution.
- Shall act as liaison between the student and mentor.
- Shall maintain a diary indicating his observation with respect to the progress of students learning in all three domains (Cognitive, Psychomotor and Affective).

Guidelines to the training mentor in the industry:

- Shall train the students in all the skill sets as far as possible.
- Shall assess and award the marks in both the assessments along with the faculty member .
- Shall check and approve the log books of the students.
- Shall approve the attendance of each student at the end of the training period.
- Shall report to the guide about student's progress, personality development or any misbehavior as the case may be.

DEPARTMENT OF TECHNICAL EDUCATION
NAME OF THE INSTITUTION
INDUSTRIAL TRAINING ASSESSMENT

PIN:

NAME OF THE STUDENT:

Skill Set Sl.No	***SKILL SET***	***Max Marks Allotted For each parameter***	***Percentage of Marks to be awarded***			
			100%	***80%***	***50%***	***20%***
			Precisely completed the work	***Completed with reasonable perfection***	***Completed the work but lack of perfection.***	***Attempted work but not completes***
1	***Assembling and Disassembling the medical equipment with proper tool(20)*** *(i) Disassebling* *(ii) Assembling*	 *10* *10*				
2	*Installation, Demonstration and Calibration of Medical equipment* *(i) Installation* *(ii) Demonstration* *(iii) Calibration*	 *10* *10* *5*				
3	*Troubleshooting the problem of medical equipment.* *(i) Fault-Finding* *(ii)Removal and Replacement of spare parts* *(iii) testing the working condition.*	 *10* *10* *10*				
4	*Maintenance of Medical equipments as per the manufacture's schedule.* *(i) Cleaning and Oiling* *(ii) Replacement of consumable spares.* *(iii) Testing of running condition*	 *5* *5* *5*				

5	*Soft skills* *(i)Communication Skill(oral/writing)lls* *(ii) Human relations.* *(iii) Supervisory abilities.*	 *5* *5* *5*				
6	*Reporting skills* *(i) Reporting technical issues* *(ii)Maintenance of medical records in the hospital.*	 *10* *5*				

(Marks in words:)

Signature of the Training In-charge (Mentor)

Name:

Signature of the visiting staff (Guide)

Name:

Designation: