Code No: R1631013 **R16** SET - 1

III B. Tech I Semester Regular/Supplementary Examinations, October/November - 2019

STRUCTURAL ANALYSIS – II

(Civil Engineering)

Time: 3 hours Max. Marks: 70

Note: 1. Question Paper consists of two parts (**Part-A** and **Part-B)**
2. Answer **ALL** the question in **Part-A**
3. Answer any **FOUR** Questions from **Part-B**

~~~~~~

PART –A (14 Marks)

1. a) Define and explain Eddy's theorem. [2M]
   b) What is Portal frame? [2M]
   c) What are advantages and limitations of Moment distribution method? [2M]
   d) Explain rotation contribution in Kani's method. [3M]
   e) Distribution factor at a joint. [3M]
   f) Define "Stiffness" of a frame. [2M]

PART –B (56 Marks)

2. Calculate Horizontal thrust, Reactions at supports and Maximum bending moment on a parabolic three-hinged arch is loaded as shown in figure. Draw bending moment for the arch and indicate the position of maximum bending moment. [14M]

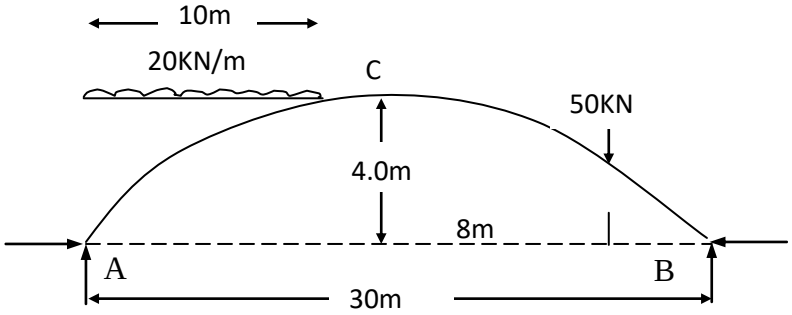

3. a) Explain how lateral loads are developed on a structural frame? [4M]
   b) Explain analysis of a frame subjected to lateral load by adopting Cantilever method. [10M]

4. a) Explain situations where the supports in a cable are at different levels. State position of maximum and minimum tension in a cable with calculations. [4M]
   b) A cable is used to support six equal and equidistant loads over span of 14 m. The central dip of cable is 1.2 m and loads are 25 KN each. Find the length of the cable required and its sectional area if the safe tensile stress is 150 N/mm^2. [10M]

|''|''|||''|'''|||'|
~~~~~~

5. Evaluate the bending moment and shear force diagrams of beam as shown below by Moment distribution method. [14M]

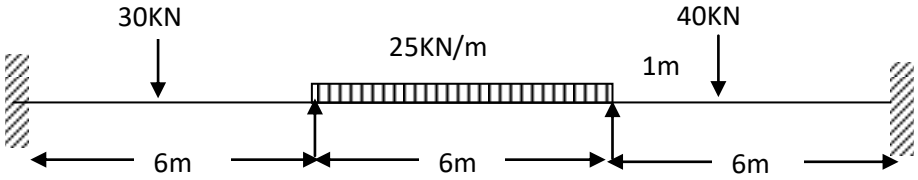

6. a) Explain procedural steps of analyzing indeterminate structure using Kani's method. [7M]

   b) Explain significance of stiffness factor and rotation factor in Kani's method of analysis. What are advantages and limitations of Kani's method? [7M]

7 A two span continuous beam carries loading as shown below. Solve the problem by stiffness method. [14M]

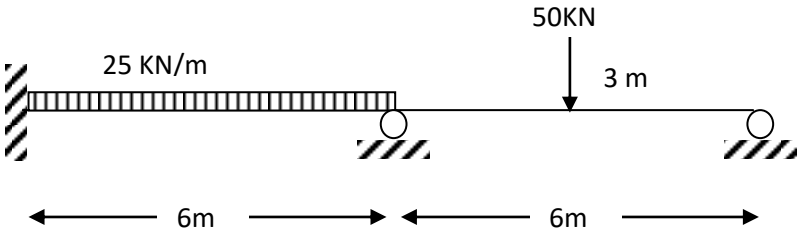

*****

|''|''|||''|'''|||'|

Code No: R1631013 **R16** SET - 2

III B. Tech I Semester Regular/Supplementary Examinations, October/November - 2019

STRUCTURAL ANALYSIS – II

(Civil Engineering)

Time: 3 hours Max. Marks: 70

Note: 1. Question Paper consists of two parts (**Part-A** and **Part-B)**
2. Answer **ALL** the question in **Part-A**
3. Answer any **FOUR** Questions from **Part-B**

~~~~~~

PART –A (14 Marks)

1. a) What do you understand by term horizontal thrust? [2M]
   b) What is difference between Arch Action and Beam Action? [2M]
   c) What is the role of suspension bridge? [2M]
   d) Explain stiffness factor and distribution factors in Moment distribution method. [3M]
   e) Explain advantages of Kani's method over Moment distribution method. [3M]
   f) Explain degrees of freedom of a joint. [2M]

PART –B (56 Marks)

2. a) Draw the equilibrium action of a three-hinged arch under action of the external loads. [7M]
   b) A Two hinged Semi Circular arch of span 20 m is loaded as shown in figure. Determine horizontal thrust and Vertical reactions. [7M]

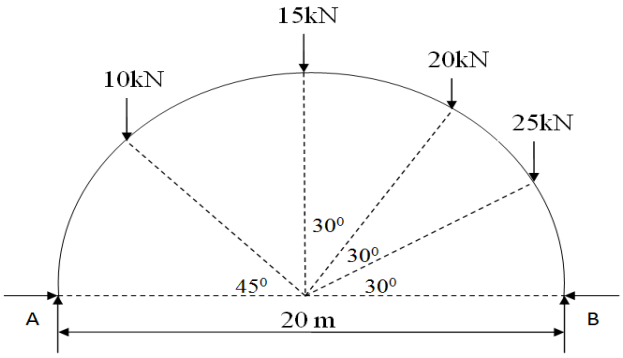

3. a) Explain how lateral loads are developed on a structural frame. [4M]
   b) Explain analysis of a frame subjected to lateral load by Adopting portal method. [10M]

4. a) Explain different types of cable anchoring methods with neat diagrams. [4M]
   b) A cable supported on piers 60 m apart at the same level has a central dip of 6 m. Calculate the maximum tension in the cable when it is carrying a load of 30 kN/m. Also determine the vertical pressure on the pier, if the backstay is inclined at an angle of 60^0 to the vertical when the cable passes over a pulley and the cable passes over saddles. [10M]

|''|''|||''|''|||'|
~~~~~~

Code No: R1631013 **R16** SET - 2

5 Evaluate the bending moment and shear force diagrams of beam in below figure by Moment distribution method. [14M]

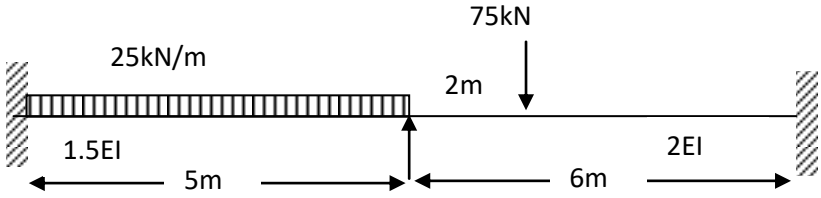

6. Analyze continuous beam in figure by Kani's method. [14M]

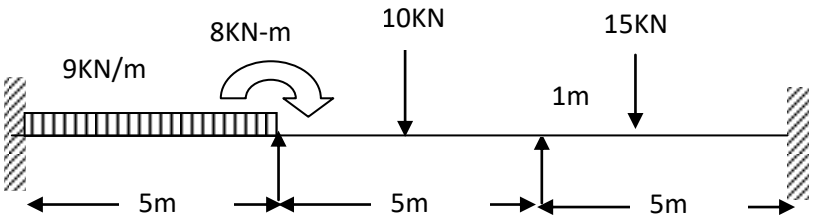

7. Explain Procedural steps involved in solving a Continuous beam with settlement of supports using Flexibility method of Analysis. [14M]

*****

|''|''|||''|'''|||'|

Code No: R1631013 **R16** SET - 3

III B. Tech I Semester Regular/Supplementary Examinations, October/November - 2019

STRUCTURAL ANALYSIS – II

(Civil Engineering)

Time: 3 hours Max. Marks: 70

Note: 1. Question Paper consists of two parts (**Part-A** and **Part-B)**
2. Answer **ALL** the question in **Part-A**
3. Answer any **FOUR** Questions from **Part-B**

~~~~~~

PART –A (14 Marks)

1. a) Define clearly the terms 'Theoretical arch' and 'Actual arch'. [2M]
   b) Explain concept in functioning of roller support in suspension bridge. [2M]
   c) Why do we require analysis of structure for lateral loads? [2M]
   d) How effect of support sinking is accounted in analysis? [3M]
   e) Kani's method of analysis is error correction method. Explain. [3M]
   f) Explain Flexibility in a structural frame. [2M]

PART –B (56 Marks)

2. a) Explain effect of temperature stresses on three hinged arch. [6M]
   b) Calculate Horizontal thrust, Reactions at supports and Maximum bending moment on a parabolic three-hinged arch is loaded as shown in figure. [8M]

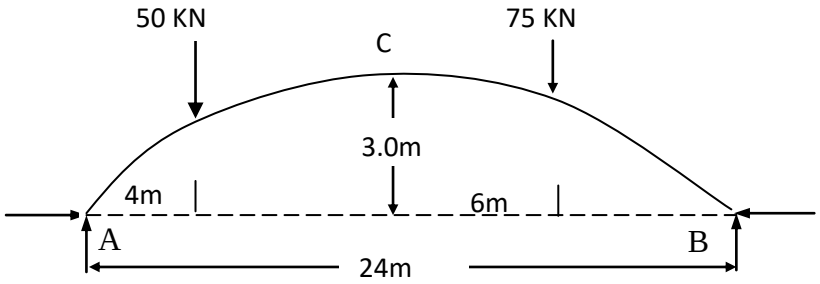

3. a) Explain procedure for Cantilever method of analysis. [7M]
   b) Analyze the Portal frame shown in figure by Portal Method. [7M]

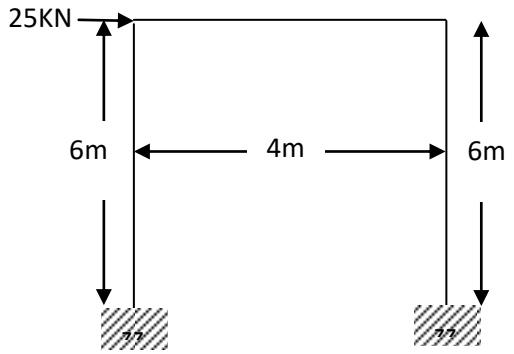

|''|''|||''|''|||'|
~~~~~~

4. a) With neat sketch list out various features of a suspension bridge. [7M]
   b) A cable is used to support six equal and equidistant loads over span of 14 m. The central dip of cable is 2 m and loads are 25 KN each. Find the length of the cable required and its sectional area if the safe tensile stress is 140 N/mm^2. [7M]

5. A continuous beam ABCD is fixed at A and simply supported at B and C, the beam CD is overhanging. The spans AB = 6 m, BC = 6 m and over hanging CD = 2 m. The moment of inertia of the span BC is 2I and that of span AB and CD is 1.5I. The beam is carrying a uniformly distributed load of 25 kN/m over span AB, a point load of 50 kN in BC at a distance of 3 m from B and point load of 15 kN at the free end. Determine the fixing moments at A, B and C adopting Moment distribution method and draw the bending moment diagram. [14M]

6. Analyze continuous beam in figure by Kani's method. [14M]

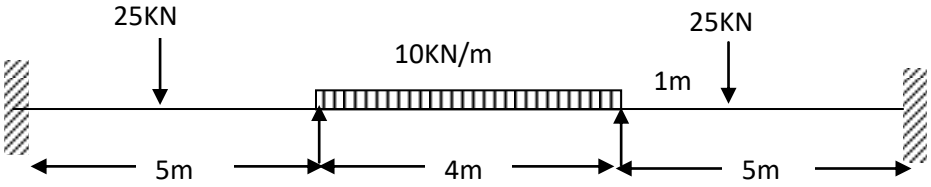

7 Derive stiffness matrices for a bar, truss, beam and frame elements highlighting their degrees of freedom. [14M]

*****

|''|''|||''|''|||'|

Code No: R1631013 **R16** SET - 4

III B. Tech I Semester Regular/Supplementary Examinations, October/November - 2019

STRUCTURAL ANALYSIS – II

(Civil Engineering)

Time: 3 hours Max. Marks: 70

Note: 1. Question Paper consists of two parts (**Part-A** and **Part-B)**
2. Answer **ALL** the question in **Part-A**
3. Answer any **FOUR** Questions from **Part-B**

~~~~~~

PART –A (14 Marks)

1. a) Explain advantage of Arch Action over Beam Action. [2M]
   b) Explain how we account effect of wind on a structural frame. [2M]
   c) Explain how joint rotations develop and their influence on different types of support. [2M]
   d) Explain procedure for accounting eccentric loads at joint in analysis. [3M]
   e) What are Rotation contributions and displacement contributions? [3M]
   f) Explain Stiffness and flexibility of a system. [2M]

PART –B (56 Marks)

2. Calculate Horizontal thrust, Reactions at supports and Maximum bending moment on a parabolic three-hinged arch is loaded as shown in figure. [14M]

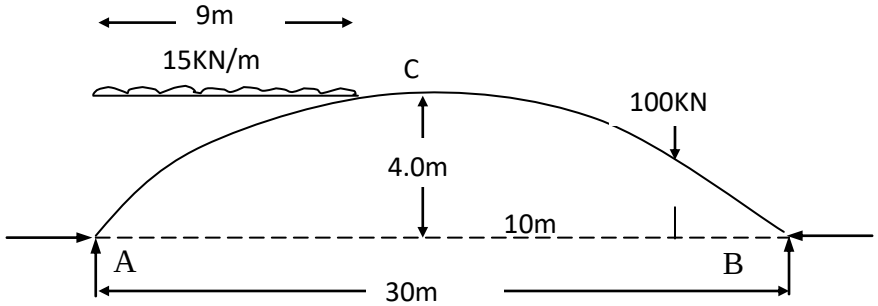

3. a) What are lateral loads? What are inconveniences associated with these lateral loads? Why we adopt approximate methods to analyze a structure with lateral loads? [7M]
   b) List out and explain concepts adopted in analyzing a structure subjected to lateral loads by an approximate method. [7M]

4. a) List various parts in a suspension bridge with neat diagram and explain the loading arrangement. [4M]
   b) A suspension bridge of 50 m span and 3.5 m wide platform is subjected to a load of 50 KN/m^2. The bridge is supported by a pair of cables having central dip of 4.5 m. Find the necessary cross sectional area of the cable, if the maximum permissible stress in the cable not to exceed 150 N/mm^2. [10M]

|''|''|||''|'''|||'|
~~~~~~

5. A continuous beam is built in at A and it is carried over rollers at B and C with spans of AB and BC being 12 m. The beam carries a uniformly distributed load of 25 kN/m over AB and a point load of 60 kN over BC 2.5 m from the support B, which sinks by 20 mm. Values of E and I are 2 x 10^5 N/mm^2 and 2x10^9 mm^4. Calculate the support moments and draw bending moment diagram giving critical values. Use Moment Distribution method. [14M]

6. A portal frame ABCD fixed at A and D is loaded as shown in figure. Draw bending moment diagram for the frame adopting Kani's method. [14M]

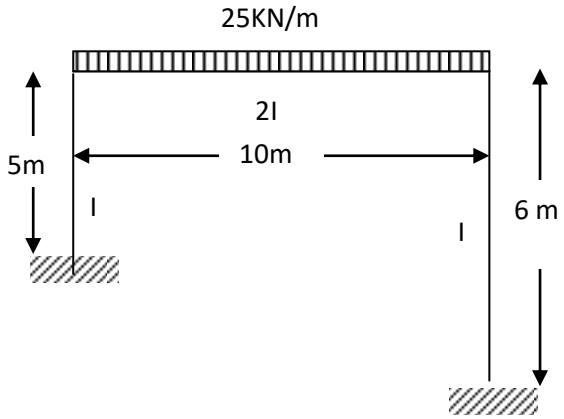

7. Explain Procedural steps involved in solving a Continuous beam with settlement of supports using Stiffness method of Analysis. [14M]

*****

|''|''|||''|'''|||'|