Code No: R1631033 **R16** **SET - 1**

III B. Tech I Semester Regular/Supplementary Examinations, October/November - 2019

DESIGN OF MACHINE MEMBERS – II

(Mechanical Engineering)

Time: 3 hours **Max. Marks: 70**

Note: 1. Question Paper consists of two parts **(Part-A and Part-B)**
2. Answer **ALL** the question in **Part-A**
3. Answer any **FOUR** Questions from **Part-B**
4. Data Book Allowed

~~~~~~

PART –A (14 Marks)

1. a) Define the term bearing life. Show its mathematical equation. [2M]
   b) What is a whipping action with reference to a connecting rod? [2M]
   c) Comment on the best suitable cross section for crane hook. [2M]
   d) Write the design criteria followed in the design of power screws. [3M]
   e) List out various wear considerations adopted in the design of gears. [3M]
   f) Draw the hanger wall boxes and identify different elements in it. [2M]

PART –B (56 Marks)

2. A Journal bearing with a diameter of 200 mm and length 150 mm carries a load of 20 kN when the journal speed is 150 rpm. The diametric ratio is 0.0015. If possible the bearing is to operate at 35^0 ambient temperatures without external cooling with a maximum oil temperature of 90^0 C. If external cooling is required, it is to be little as possible to minimize the required oil flow rate and heat exchanger size. [14M]
   i) What type of oil do you recommend?
   ii) Will the bearing operate without external cooling?
   iii) If the bearing operates without external cooling, determine the operating oil temperature.
   iv) If the bearing operates with external cooling, determine the amount of oil in kg/min required to carry away the excess heat generated over heat dissipated, when the oil temperature rises from 85^0 C to 90^0 C, when passing through the bearing.

3. a) What are the cross-sections commonly employed for connecting rods? Why I-section is chosen for high-speed I.C engines? [7M]
   b) Determine the diameter of the connecting rod of 150 mm length, subjected to an axial compression load of 180 KN, taking to be freely hinged at the ends. Take the factor of safety to be 7. $E = 2.15 \times 10^5$ N/mm^2. [7M]

4. The section of a crane hook is a rectangle 60 mm × 40 mm. The center of curvature of the section is at a distance of 80 mm from the centroid of the section. A load of 15 kN is acting through the center of curvature. Determine the maximum and minimum bending stresses induced in the hook. [14M]

|''|''|||''|'''|||'|
~~~~~~

5. a) List the type of threads used in power screws. Give practical example for each type of threads. State advantages and disadvantages of using different types of threads in "power screws". [8M]
   b) On what factors, the selection of a belt drive depends? Enumerate the advantages and disadvantages of a belt drive. [6M]

6. Two parallel shafts are connected by a pair of steel helical gears. The power transmitted is 15 kW at 4000 rpm of the pinion. The safe static strength for the material is 100 MPa. Gear ratio is 4:1 Stub teeth with 20^0 pressure angle in diameter plane have helix angle of 45^0. Also calculate the necessary BHN with the standard point of wear. Check the design for dynamic load and suggest modification if necessary. Use 30 teeth on the pinion. [14M]

7. A hand lever for a brake is 0.8 m long from the centre of gravity of the spindle to the point of application of the pull of 300 N. The effective overhang from the nearest bearing is 100 mm. If the permissible stress in tension, shear and crushing is not to exceed 66 MPa, design the spindle, key and lever. Assume the arm of the lever to be rectangular having width twice of its thickness. [14M]

*****

|''|''|||''|'''|||'|

Code No: R1631033 **R16** **SET - 2**

III B. Tech I Semester Regular/Supplementary Examinations, October/November - 2019

DESIGN OF MACHINE MEMBERS – II

(Mechanical Engineering)

Time: 3 hours **Max. Marks: 70**

Note: 1. Question Paper consists of two parts **(Part-A and Part-B)**
2. Answer **ALL** the question in **Part-A**
3. Answer any **FOUR** Questions from **Part-B**
4. Data Book Allowed

~~~~~~

PART –A **(14 Marks)**

1. a) Write down the properties of good bearing materials. [2M]
   b) Enlist the principal functions of the cylinder liners. [2M]
   c) State the significance of neutral axis in curved beams. [2M]
   d) What are the different elements of a rope drive? [3M]
   e) Define the load concentration factor in gear drives design. [3M]
   f) How do you understand the various types and functions of levers? [2M]

PART –B **(56 Marks)**

2. a) Distinguish the "Hydrodynamic" and "Hydrostatic Bearings" with figures and suitable applications. [7M]
   b) A bearing is required to carry 4500 N stationary radial load. The shaft rotates at 1000 rpm and the life desired is 30000 hrs. The running conditions are steady and no shock loading. Select a suitable bearing? [7M]

3. Design a C.I trunk-type piston for a single cylinder, four stroke cycle engine, developing 5 kW at 600 rpm. Diameter of piston is 120 mm and the maximum explosion pressure is 4.5 MPa. Heat supplied to the engine is 19000 kJ/kWh. About 6% of the heat is conducted through the piston crown. The heat conduction factor for C.I may be taken as 46 W/m/^{0}C. The temperature difference between the centre and edge of the crown may be taken as 250^0 C. [14M]

4. A load of 10 kN is applied to a steel curved beam as shown in the figure. Compute the increase in distance between the points A and B due to the load. Assume G = 0.84 × 10^5 N/ mm^2, E = 2.10 × 10^5 N/ mm^2. [14M]

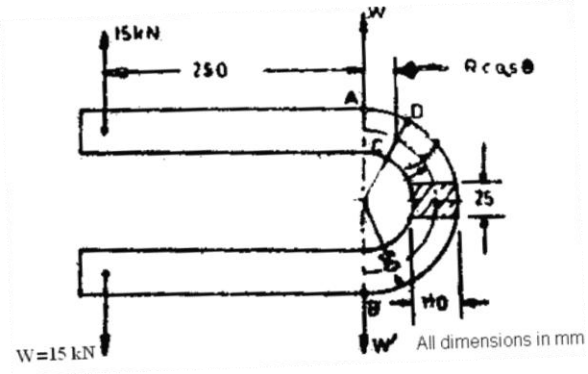

|''|''|||''|'''|||'|
~~~~~~

5. Design a roller chain drive for driving a compressor by 12 kW electric motor running at 1200 rpm. The compressor speed is around 350 rpm. The compressor operates for 16 hours per day. [14M]

6. a) Explain why helical gears are capable of transmitting greater power at high speed as compared to the spur gear? [6M]

   b) A pair of spur gears has pinion made of material with 80 MPa safe static bending stresses, gear made of material with safe static bending stresses of 55 MPa. The module and face width of the teeth are 5 mm and 60 mm respectively. The pinion Rotates at 60 rpm. The number of teeth on pinions and gear are 20 and 80 respectively. Find the capacity in kW of the gear drive. The error is limited to $e = 16+1.25(m+0.25\sqrt{d})$ microns. B.H.N of the pinion material is 250. [8M]

7. A workshop crane is lifting a load of 25 kN through a wire rope and a hook. The rope drum diameter may be taken as 30 times the diameter of the rope. The load is to be lifted with an acceleration of 1 m/s^2. Calculate the diameter of the wire rope. Take a factor of safety of 6 and young's modulus for the wire rope 80 kN/mm^2. The ultimate stress may be taken as 1800 MPa. The cross - sectional area of the wire rope may be taken as 0.38 times the square of the wire rope diameter. [14M]

*****

|''|''|||''|'''|||'|

Code No: **R1631033** **R16** **SET - 3**

III B. Tech I Semester Regular/Supplementary Examinations, October/November - 2019

DESIGN OF MACHINE MEMBERS – II

(Mechanical Engineering)

Time: 3 hours **Max. Marks: 70**

Note: 1. Question Paper consists of two parts **(Part-A and Part-B)**
2. Answer **ALL** the question in **Part-A**
3. Answer any **FOUR** Questions from **Part-B**
4. Data Book Allowed

~~~~~~

PART –A **(14 Marks)**

1. a) Lists the method of bearing lubrication. [2M]
   b) What are the forces acting on piston? [2M]
   c) Why trapezoidal geometry is most suitable for crane hook? [2M]
   d) List out the various materials available for belt manufacturing. [3M]
   e) Write the mathematical expression for dynamic load factor used in the design gears. [3M]
   f) What is a bracket? Sketch at least two types of bracket systems. [2M]

PART –B **(56 Marks)**

2. a) Distinguish between full and partial journal bearings. [4M]
   b) Design a journal bearing for a centrifugal pump running 1440 r.p.m. The diameter of the journal is 100 mm and load on each bearing is 20 KN. The factor ZN/P may be taken as 28 for centrifugal pump bearings. The bearing is running at 75^0 C temperature and the atmosphere temperature is 30^0 C. The energy dissipation coefficient is 87.5W/m^2 ^{0}C. Take diametric clearance as 0.1 mm. [10M]

3. Design a plain carbon steel centre crankshaft for a single acting four stroke single cylinder engine for the following data: [14M]
   Bore=400 mm, stroke=600 mm, engine speed=200 rpm
   Mean effective pressure=0.5 N/mm^2
   Maximum combustion pressure=2.5 N/mm^2,
   Weight of flywheel used as a pulley=50 KN. Total Belt pull=6.5 KN.
   When the crank has turned through 35^0 from the top dead centre the pressure on the piston is 1 N/mm^2 and the torque on the crank is maximum. The ratio of the connecting rod length to the crank radius is 5. Assume any other data required for the design.

4. Determine the maximum stress in the frame of the 100kN punch press as shown in the figure. [14M]

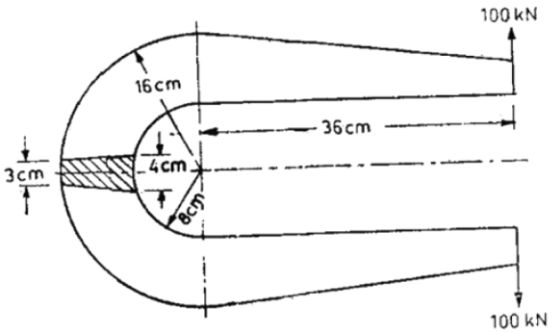

|''|''|||''|''|||'|
~~~~~~

5. A machine slide weighing 3000 N is elevated by a double start acme threaded screw at the rate of 840 mm/min. If the coefficient of friction be 0.12, calculate the power to drive the slide. The end of the screw is carried on a thrust collar of 32 mm inside diameter and 58 mm outside diameter. The pitch of the screw thread is 6 mm and outside diameter of the screw is 40 mm. If the screw is of steel, is it strong enough to sustain the load? Draw a neat sketch of the system. [14M]

6. A cast steel spur pinion (σ_d=200 MPa) running at 450 rpm transmits 20 kW power to a cast iron gear (σ_d=80 MPa) running at approximately 112 rpm. The load is steady. Design the drive and check for dynamic and wear loads. [14M]

7. a) Design a wire rope for a vertical mine hoist to lift a load of 50 kN, from a depth of 250 m. rope speed of 8 m./s is to be attained in 18 seconds. Take factor of safety as 6. Assuming suitable data if necessary. [7M]

   b) The effective length of hand lever is 1 meter. The effective overhang from the nearest bearing is 150 mm. The lever and shaft are made of alloy steel for which tensile yield strength is 460 N/mm^2. If the maximum force exerted at the handle is 300 N, design the lever and the shaft with a safety with a safety factor of 4. [7M]

*****

|''|''|||''|'''|||'|

Code No: R1631033 **R16** **SET - 4**

III B. Tech I Semester Regular/Supplementary Examinations, October/November - 2019

DESIGN OF MACHINE MEMBERS – II

(Mechanical Engineering)

Time: 3 hours **Max. Marks: 70**

Note: 1. Question Paper consists of two parts **(Part-A and Part-B)**
2. Answer **ALL** the question in **Part-A**
3. Answer any **FOUR** Questions from **Part-B**
4. Data Book Allowed

~~~~~~

PART –A (14 Marks)

1. a) Define Bearing characteristic number. [2M]
   b) Write the mathematical equation for the thrust exerted by the connecting rod. [2M]
   c) Draw the bending stress distribution over a curved beam. [2M]
   d) Define the term belt slip. [3M]
   e) Distinguish the module and circular pitch in the gears. [3M]
   f) What is a rocker arm? List at least two areas of its application. [2M]

PART –B (56 Marks)

2. a) Differentiate between hydrostatic and hydrodynamic bearing providing their neat sketch. [7M]
   b) An 80 mm long journal bearing supports a load of 2800 N on a 50 mm diameter shaft. The bearing has a radial clearance of 0.05 mm and the viscosity of the oil is 0.021 kg/m-s at the operating temperature. If the bearing is capable of dissipating 80 J/s, determine the maximum safe speed. [7M]

3. A connecting rod is required to be designed for a high speed four stroke I.C engine. The following data are available: [14M]
   Diameter of piston = 88 mm.
   Mass of reciprocating parts = 1.6 kg.
   Length of connecting rod(centre to centre)= 300 mm
   Stroke=125 mm. R.P.M =2220 (when developing 50 KW)
   Possible over speed = 3000 rpm;
   Compression ratio = 6.8:1 (approximately);
   Probable maximum explosion pressure (assumed shortly after dead centre say at about 3^0) = 3.5 N/mm^2. Draw fully dimensioned drawings of the connecting rod showing the provision for the lubrication.

4. Design a crane hook for a 30 KN crane. The hook is to be of swiveling type and of [14M]
   i) Triangular section, ii) Circular section.
   Choose the suitable values for the stresses.

5. The lead screw of a lathe has 50 x 8 threads. The screw must exert and axial pressure of 2500 N in order to drive the tool carriage. The thrust is carried on a collar 110 mm outside diameter and 55 mm inside diameter and the screw rotates at 30 rpm. Determine: i). The power required to drive the screw and [14M]
   ii). The efficiency of the lead screw.
   Assume a coefficient of friction of 0.15 for the screw and 0.12 for the collar.

|''|''|||''|'''|||'|
~~~~~~

6. A pair of cast steel annealed spur gears with cast teeth transmits 18.75 kW and 60 rev/min of the pinion. The pitch diameter of the pinion is approximately 0.23 m and the velocity ratio is 2.5. Determine the module and face of the gears; also the correct pitch diameters and tooth numbers. Check for dynamic and wear loads. [14M]

7. a) Name the type of stresses induced in the wire ropes. [4M]

   b) Design a foot lever, which is 1000 mm from the centre of shaft to the point of application of 800 N load. Find: Dimensions of rectangular arm of the foot lever at 60 mm from the centre of shaft assuming width of the arm as 3 times thickness. The allowable tensile stress may be taken as 73 N/mm^2. [10M]

*****

|''|''|||''|'''|||'|