CURRICULUM – 2018

(C-18)

DIPLOMA IN PACKAGING TECHNOLOGY



STATE BOARD OF TECHNICAL EDUCATION & TRAINING

TELANGANA, HYDERABAD

III SEMESTER

General Time Schedule

Periods Format

Semester - III

Sl No	Course Code	Course Name	Teaching Scheme					Examination Scheme						
			instruction period sper week			Total Periods per semester	Credits	Continuous internal evaluation			Semester end examination			
			L	T	P			mid sem 1	mid sem 2	internal evaluation	Max Marks	Min Marks	total marks	Min marks for Passing including internal
1	18PKG-301F	Applied Engineering Mathematics	3	1	0	60	3	20	20	20	40	14	100	35
2	18PKG-302C	Engineering Materials and Manufacturing Processes	3	1	0	60	3	20	20	20	40	14	100	35
3	18PKG-303C	Conventional Packaging Materials Printing	3	1	0	60	3	20	20	20	40	14	100	35
4	18PKG-304C	Ancillary Packaging Materials & Bulk Packaging	3	1	0	60	3	20	20	20	40	14	100	35
5	18PKG-305C	Basic Electrical & Electronic Engineering	3	1	0	60	3	20	20	20	40	14	100	35
6	18PKG-306P	Machiniing Drawing	1	0	2	45	1.5	20	20	20	40	20	100	50
7	18PKG-307P	Paper Based Materials Testing Lab Practice Printing Lab	1	0	2	45	1.5	20	20	20	40	20	100	50
8	18PKG-308C	Ancillary Pacakaging Materilas Testing Lab Practice	1	0	2	45	1.5	20	20	20	40	20	100	50
9	18PKG-309C	Electrical Technology Lab PRactice	1	0	2	45	1.5	20	20	20	40	20	100	50
10	18PKG-310P	Communication Skills and Life Skills Lab	1	0	2	45	1.5	20	20	20	40	20	100	50
11		Academic activities	0	0	7	105	2.5	0	0	Rubrics			--	-
			20	5	17	630	**25**	200	200	200	400	170	1000	425
	Activities: student performance is to be assessed through Rubrics													

All the above marks are in percentage weightage

APPLIED ENGINEERING MATHEMATICS

Course Title **: APPLIED ENGINEERING MATHEMATICS**	Course Code **: 18COMMON301F**
SEMESTER : **III**	Course Group **: Foundation**
Teaching Scheme (L : T : P) : **36 :24 : 0 (** in Periods)	Credits : **3 Credits**
Type of Course : **Lecture + Assignments**	Total Contact Periods : **60**
CIE : 6**0 Marks**	SEE : **40 Marks**
Programmes : **Common to all Engineering Diploma Programmes**	

Pre requisites

This course requires the knowledge of Basic Engg. Mathematics and Engg. Mathematics at Diploma 1st and 2nd Semester level.

Course Outcomes: COs

At the end of the course, the student will have the ability to:

CO 1	Integrate different kinds of functions
CO 2	Integrate functions using different methods
CO 3	Find the values of definite integrals.
CO 4	Solve simple problems of Areas, Volumes.
CO 5	Find the Mean and RMS values of various functions and Approximate values of Definite integrals using Trapezoidal and Simpson's 1/3rd rule
CO 6	Form the Differential Equation and Solve Simple DEs of 1st order and 1stdegree.

Course Content:

Unit-I **Duration: 10 Periods (L: 6.0 – T:4.0)**

Indefinite Integration-I

Integration regarded as anti-derivative – Indefinite integral of standard functions. Properties of indefinite integral. Integration by substitution or change of variable. Integrals of the form $\sin^m\theta . \cos^n\theta$. where m and n are positive integers. Integrals of tan x, cot x, sec x, cosec x and powers of tan x, sec x by substitution.

Evaluation of integrals which are reducible to the following forms:

$i)\ \frac{1}{a^2+x^2}, \frac{1}{a^2-x^2}, \frac{1}{x^2-a^2}$

$ii)\ \frac{1}{\sqrt{a^2+x^2}}, \frac{1}{\sqrt{a^2-x^2}}, \frac{1}{\sqrt{x^2-a^2}}$

$iii)\ \sqrt{x^2+a^2}, \sqrt{a^2-x^2}, \sqrt{x^2-a^2}$

Unit – II **Duration: 08 Periods (L: 4.8 – T:3.2)**

Indefinite Integration-II

Integration by decomposition of the integrand into simple rational algebraic functions. Integration by parts, Bernoulli's rule.

Unit-III **Duration: 06 Periods (L: 3.6 – T:2.4)**

Definite Integral and its Properties:

Definite integral-fundamental theorem of integral calculus, properties of definite integrals, evaluation of simple definite integrals. Definite integral as the limit of a sum.

Unit – IV **Duration: 10 Periods (L: 6.0 – T:4.0)**

Applications of Definite Integrals:

Areas under plane curves – Sign of the Area – Area enclosed between two curves. Solid of revolution – Volumes of solids of revolution.

Unit – V **Duration: 08 Periods (L: 4.8 – T:3.2)**

Mean, RMS values and Numerical Integration:

Mean values and Root Mean Square values of a function on a given interval.

Trapezoidal rule, Simpson's 1/3 rule to evaluate an approximate value of a definite integral.

Unit – VI **Duration: 18 Periods (L: 10.8 – T:7.2)**

Differential Equations of First Order:

Definition of a differential equation – order and degree of a differential equation – formation of differential equations – solution of differential equation of first order, first degree : variables -separable, homogeneous, exact, linear differential equation, Bernoulli's equation.

Reference Books:

1. Integral Calculus Vol.I, by M.Pillai and Shanti Narayan
2. Thomas' Calculus, Pearson Addison –Wesley Publishers

Suggested E-Learning references

1. www.freebookcentre.net/mathematics/introductory-mathematics-books.html

2.E-books:www.mathebook.net

Suggested Learning Outcomes

Unit-I

1.0 Use Indefinite Integration to solve engineering problems

1.1 Explain the concept of Indefinite integral as an anti-derivative.

1.2 State the indefinite integral of standard functions and properties of Integrals $\int$ (u + v) *dx* And $\int$ *ku dx* where k is constant and *u, v* are functions of *x.*

1.3 Solve integration problems involving standard functions using the above rules.

1.4 Evaluate integrals involving simple functions of the following type by the method of substitution.

i) $\int f(ax + b)\,dx$ *where* $f(x)\,dx$ is in standard form.

ii) $\int [f(x)]^n f'(x)\,dx$

iii) $\int f'(x)/[f(x)]\,dx$

iv) $\int f\{g(x)\}\,g'(x)\,dx$

1.5 Find the Integrals of *tan x, cot x, sec x* and *cosec x using*the above.

1.6 Evaluate the integrals of the form $\int Sin^m\theta Cos^n\theta.\,d\theta$ where m and n are positive integers.

1.7 Evaluate integrals of powers of *tan x* and *sec x*.

1.8 Evaluate the Standard Integrals of the functions of the type

$$i)\ \frac{1}{a^2+x^2}, \frac{1}{a^2-x^2}, \frac{1}{x^2-a^2}$$

$$ii)\ \frac{1}{\sqrt{a^2+x^2}}, \frac{1}{\sqrt{a^2-x^2}}, \frac{1}{\sqrt{x^2-a^2}}$$

$$iii)\ \sqrt{x^2+a^2}, \sqrt{a^2-x^2}, \sqrt{x^2-a^2}$$

1.9 Evaluate the integrals of the type

$$\int \frac{1}{a \pm bSin\theta} d\theta, \int \frac{1}{a \pm b\cos\theta} d\theta \text{ and } \int \frac{1}{a\cos\theta \pm b\sin\theta \pm c} d\theta$$.

Unit-II

2.0 Use Indefinite Integration to solve engineering problems

2.1 Evaluate integrals using decomposition method.

2.2 Evaluate integrals using integration by parts with examples.

2.3 State the Bernoulli's rule for evaluating the integrals of the form $\int u.vdx$.

2.4 Evaluate the integrals of the form $\int e^x [f(x) + f'(x)]\, dx$.

Unit-III

3.0 Understand definite integral and use it in engineering applications

3.1 State the fundamental theorem of integral calculus

3.2 Explain the concept of definite integral.

3.3 Calculate the definite integral over an interval.

3.4 State various properties of definite integrals.

3.5 Evaluate simple problems on definite integrals using the above properties.

3.6 Explain definite integral as a limit of sum by considering an area.

Unit –IV

4.0 Understand definite integral and use it in engineering applications

4.1 Find the Areas under plane curves and area enclosed between two curves using integration.

4.2 Obtain the Volumes of solids of revolution.

Unit –V

5.0 Understand Mean, RMS values and Numerical Methods

5.1 Obtain the Mean value and Root Mean Square (RMS) value of the functions in any given Interval.

5.2 Explain the Trapezoidal rule, Simpson's 1/3 rules for approximation of definite integrals andprovide some examples.

Unit –VI

6.0 Solve Differential Equations in engineering problems.

6.1 Define a Differential equation, its order and degree

6.2 Form a differential equation by eliminating arbitrary constants.

6.3 Solve the first order first degree differential equations by the following methods:

i. Variables Separable.

ii. Homogeneous Equations.

iii. Exact Differential Equations

iv. Linear differential equation of the form $dy/dx + Py = Q$,
where P and Q are functions of x or constants.

v. Bernoulli's Equation (Reducible to linear form.)

6.4 Solve simple problems leading to engineering applications by using above methods.

Suggested Student Activities

1. Student visits Library to refer Standard Books on Mathematics and collect related material

2.Quiz

3.Group discussion

4.Surprise tests

5. Seminars

6. Home Assignments

CO / PO - MAPPING

CO	PO1	PO2	PO3	PO4	PO5	PO6	PO7	PO8	PO9	PO10	Mapped POs
CO1	3	2	2	1			1			3	1,2,3,4,7,10
CO2	3	2	2	1			1			3	1,2,3,4,7,10
CO3	3	2	2	1			1			3	1,2,3,4,7,10
CO4	3	2	2	1			1			3	1,2,3,4,7,10
CO5	3	2	2	1			1			3	1,2,3,4,7,10
CO6	3	2	2	1			1			3	1,2,3,4,7,10

MID SEM-I EXAM

S.No	Unit Name	R	U	A	Remarks
1	Unit-I	1, 2	5(a) 5(b)	7(a) 7(b)	
2	Unit-II	3, 4	6(a) 6(b)	8(a) 8(b)	
Total Questions		4	4	4	

MID SEM –II EXAM

S.No	Unit Name	R	U	A	Remarks
1	Unit-III	1, 2	5(a) 5(b)	7(a) 7(b)	
2	Unit-IV	3, 4	6(a) 6(b)	8(a) 8(b)	
Total Questions		4	4	4	

Semester End Examination

Sl No	Unit No.	Questions to be set for SEE				Remarks
		R		U	A	
1	I	4	1	9(a)	13(a)	
2	II					
3	III		2	10(a)	14(a)	
4	IV					
5	V		3 — 5, 6	9(b) 11(a) 11(b)	13(b) 15(a) 15(b)	
6	VI		3 — 7,8	10(b) 12(a) 12(b)	14(b) 16(a) 16(b)	
Total Questions		8		8	8	

Legend:	Remembering (R)	1 Mark
	Understanding (U)	3 Marks
	Application (A)	5 Marks

III SEMESTER

SKILL UPGRADATION IN - APPLIED ENGINEERING MATHEMATICS

ACTIVITY ASSESSMENT Steps

1. **Mathematical concepts**
2. **Procedure**
3. **Explanation**
4. **Working with others**
5. **Mathematical errors**

ACTIVITIES

1 .Write a short notes on different types of integrals.

2. Prepare a notes on different methods to evaluate integrals.

3. List out Properties of definite integrals.

4. List out and explain various applications of definite integrals.

5. Explain the procedure to solve problems on Areas using integration

6. Explain the procedure to find volumes of irregular shapes of solids of revolution using integration.

7. Prepare a presentation to find Mean values and R.M.S values of any given function.

8. Explain the procedure to calculate approximate area by using Trapezoidal rule.

9. Explain the procedure to calculate approximate area by Simpson's 1/3 rule

10. Prepare a presentation on solving 1st order differential equations using any suitable method.

CO / PO - MAPPING OF ACTIVITIES

CO	PO1	PO2	PO3	PO4	PO5	PO6	PO7	PO8	PO9	PO10
CO1	3	2	2	1			1	2	2	3
CO2	3	2	2	1			1	2	2	3
CO3	3	2	2	1			1	2	2	3
CO4	3	2	2	1			1	2	2	3
CO5	3	2	2	1			1	2	2	3
CO6	3	2	2	1			1	2	2	3
CO7	3	2	2	1			1	2	2	3
CO8	3	2	2	1			1	2	2	3
CO9	3	2	2	1			1	2	2	3
CO10	3	2	2	1			1	2	2	3

Rubrics for Activity assessment

CATEGORY	4	3	2	1
Mathematical Concepts	Explanation shows complete understanding of the mathematical concepts used to solve the problem(s).	Explanation shows substantial understanding of the mathematical concepts used to solve the problem(s).	Explanation shows some understanding of the mathematical concepts needed to solve the problem(s).	Explanation shows very limited understanding of the underlying concepts needed to solve the problem(s) OR is not written.
Procedures	Typically, uses an efficient and effective procedure to solve the problem(s).	Typically, uses an effective procedure to solve the problem(s).	Sometimes uses an effective procedure to solve problems, but does not do it consistently.	Rarely uses an effective procedure to solve problems.
Explanation	Explanation is detailed and clear.	Explanation is clear.	Explanation is a little difficult to understand, but includes critical components.	Explanation is difficult to understand and is missing several components OR was not included.
Working with Others	Student was an engaged partner, listening to suggestions of others and working cooperatively throughout lesson.	Student was an engaged partner but had trouble listening to others and/or working cooperatively.	Student cooperated with others, but needed prompting to stay on-task.	Student did not work effectively with others.
Mathematical Errors	90-100% of the steps and solutions have no mathematical errors.	Almost all (85-89%) of the steps and solutions have no mathematical errors.	Most (75-84%) of the steps and solutions have no mathematical errors.	More than 75% of the steps and solutions have mathematical errors.

PASS SCORE: 2.5

STUDENT ASSESSMENT by RUBRICS

S.NO	PIN	CO 1	CO 2	CO 3	CO 4	CO 5	CO 6	CO 7	CO 8	CO 9	CO 10	AVERAGE

Code: C18-Common-301F

STATE BOARD OF TECHNICAL EDUCATION & TRAINING, TELANGANA

BOARD DIPLOMA EXAMINATIONS

MID SEM –I, MODEL PAPER, III SEMESTER

APPLIED ENGINEERING MATHEMATICS

TIME: 1: 00 Hours Max. Marks: 20

PART-A

Instructions: 1. Answer **ALL** questions 04 X 01 = 04

2 Each question carries **ONE** mark

1. Integrate: $e^x - \sin x + x^4$
2. Find : $\int \frac{dx}{5x+7}$ dx
3. Write Bernoulli's rule of integration
4. Find : $\int x \log x \, dx$

PART-B

Instructions: 1. Answer any **TWO** questions 02 X 03 = 06

2. Each question carries **THREE** marks

5 a). Evaluate : $\int \frac{x^5}{1+x^{12}} dx$.

Or

5 b) Evaluate : $\int \frac{dx}{(x^{2+}25)}$

6 a). Evaluate : $\int x \, sinx dx$

Or

6 b).Evaluate : $\int \frac{3x+2}{(x-1)(2x+3)} dx$.

PART C

Instructions: 1. Answer any **TWO** questions 02 X 05 = 10

2. Each question carries **FIVE** marks

7 a). Evaluate $\int \sqrt{x^2 + 2x + 5}$ dx

Or

7 b) Evaluate : $\int cosx\ cos2xdx$.

8 a). Find $\int xTan^{-1}xdx$.

Or

8 b) Find $\int x^4Cos2xdx$.

@@@

Code: C18-Common-301F

STATE BOARD OF TECHNICAL EDUCATION & TRAINING, TELANGANA

BOARD DIPLOMA EXAMINATIONS

MID SEM –II, MODEL PAPER, III SEMESTER

APPLIED ENGINEERING MATHEMATICS

TIME: 1: 00 Hours Max. Marks: 20

PART-A

Instructions: 1. Answer **ALL** questions 04 X 01 = 04

2 Each question carries **ONE** mark

1. Integrate : $\int_0^1 (x^4 + 1)\, dx$
2. Evaluate : $\int_0^{\pi} Sin3x dx$
3. Evaluate : $\int_0^1 \frac{1}{1+x^2} dx$
4. Write the formula to find area bounded by the curve y= f(x) , x-axis,between the limits x=a and x =b

PART-B

Instructions: 1. Answer any **TWO** questions 02 X 03 = 06

2. Each question carries **THREE** marks

Find the Mean value of the function y = logx on [1 , e]

5 a) Evaluate: $\int_0^{\frac{\pi}{2}} \sqrt{1 - Sin2x} dx$

Or

5 b) Evaluate : $\int_0^{\frac{\pi}{2}} sin^2 x dx$

6 a). Find the area bounded by the line 2x + y =8, x-axis and the lines x = 2 and x = 4.

Or

6 b). Find the Volume of the Solid generated by revolving the part of the Circle $x^2 + y^2 = 36$ From x = 0 to x = 4 about x – axis.

PART C

Instructions: 1. Answer any **TWO** questions 02 X 05 = 10

2. Each question carries **FIVE** marks

7 a). Evaluate: $\int_0^{\frac{\pi}{2}} \frac{\sqrt{Sinx}}{\sqrt{Sinx}+\sqrt{Cosx}}\,dx$

Or

7 b). Evaluate : $\int_0^{\frac{\pi}{2}} \log sin\, x dx$

8 a) Find the area enclosed between the Parabolas $y = 3x - x^2 and y = x^2 - x$.

Or

8 b). Find the Volume of the Solid generated by the revolution of the area bounded by the Ellipse $\frac{x^2}{25} + \frac{y^2}{16} = 1$, about x- axis.

@@@

C18-common
SUB.CODE:301F

BOARD DIPLOMA EXAMINATION,(C-18)

MODEL PAPER

III SEMESTER EXAMINATION

APPLIED ENGINEERING MATHEMATICS

Time: 2 hours [Total Marks: 40]

PART-A

Instructions: 1. Answer **ALL** questions 08 X 01 = 08

2 Each question carries **ONE** mark

1. Integrate: $x^7 - 3/x$

2. Evaluate: $\int_0^1 (x^2 + 1)$ dx

3. Write the formula to find mean value of y = f(x), in the interval (a, b)

4. Find the Order and Degree of the Differential Equation $x\frac{dy}{dx} = \sqrt{1 + \left(\frac{dy}{dx}\right)^2}$.

5 Write Trapezoidal Rule to find the approximate value of $\int_a^b f(x)dx$.

6. Write the formula to find RMS value of y = f(x) over the range x=a and x = b.

7. Solve: $\frac{dy}{dx} = e^{2x+y}$

8. Write the condition for exactness of the differential equation M(x,y)dx + N(x,y)dy =0

PART-B

Instructions: 1. Answer any **FOUR** questions 04 X 03 = 12

2. Each question carries **THREE** marks

9 a). Evaluate: $\int_0^{\frac{\pi}{2}} \sqrt{1 - Sin2x}dx$

Or

9 b) Find the approximate value of $\int_0^6 \frac{dx}{1+x}$ by taking n = 6 using Trapezoidal rule.

10 a) Find the area bounded by the Parabola $y = x^2 - 2x + 1$ and x-axis.

Or

10 b) Form the Differential Equation from $y = Ae^x + Be^{3x}$ where A, B are arbitrary

Constants.

11 a) Find the RMS value of $\sqrt{\log x}$ over the range x= 1 and x= e

Or

11 b) Calculate approximate value of $\int_0^4 \frac{dx}{1+x}$ by taking n= 4 using Simpson's 1/3 rule

12 a) Solve: $x\frac{dy}{dx} + 2y = logx$.

Or

12 b) Solve: $x(1-y^2)dx + y(1-x^2)dy = 0$

PART C

Instructions: 1. Answer any **FOUR** questions 04 X 05 = 20

2. Each question carries **FIVE** marks

13 a) Evaluate: $\int \frac{1}{x^2+2x+2}$ dx

Or

13 b) Find the RMS value of y = $\sqrt{8-4x^2}$ between x = 0 and x = 2

14 a) Find the volume of solid generated by revolving the Ellipse $\frac{x^2}{a^2} + \frac{y^2}{b^2} = 1$ about Major axis

Or

14 b) Solve: $\frac{dy}{dx} = Sin(x+y)$

15 a) A curve is drawn to passing through the points given by the following table:

x	1	1.5	2	2.5	3	3.5	4
y	3	3.4	3.7	3.8	2.7	2.6	2.1

Calculate the approximate area bounded by the curve , x-axis and the lines x= 1 and x= 4 using Simpson's 1/3 rule

Or

15 b) Evaluate: $\int_0^1 \sqrt{(1-x^2)}dx$ approximately by taking n = 4 using Simpson's 1/3 rd Rule.

16 a) Solve : $(y^2 - xy)dx = x^2dy$.

Or

16 b) . Solve: $\frac{dy}{dx} + yCosx = y^3$Sin2x.

@@@

Engineering Materials and Manufacturing Processes

Course Title :	**Engineering Materials and Manufacturing Processes**	Course Code	**18PKG-302C**
Semester	**III**	Course Group	**Core**
Teaching Scheme in Hrs(L:T:P)	**30:15:0**	Credits	**3**
Methodology	**Lecture + Assignments**	Total Contact Hours :	**45/60Pds**
CIE	**60 Marks**	SEE	**40 Marks**

Pre requisites

This course requires the basic knowledge of Basic Workshop Practice.

On completion of the course, the student will be able to :

Course Outcomes

CO1	Identify the various materials for manufacturing process for a particular application.
CO2	Analyze the mechanical properties of engineering metals and used in engineering applications.
CO3	Construct Iron-Carbon Equilibrium diagram and indicate the salient points.
CO4	Select the various types of Fabrication Process for Mechanical applications.
CO5	Identify the varies types of drilling machines and their operations
CO6	Classify the varies types of Forming operations and explain their principles
CO7	List the different metal cutting operations involved in manufacturing process.

MID SEM –I EXAM					
S.No	Unit Name	R	U	A	Remarks
1	Unit-I	1, 2	5(a) 5(b)	7(a) 7(b)	
2	Unit-II	3, 4	6(a) 6(b)	8(a) 8(b)	
Total Questions		4	4	4	
MID SEM –II EXAM					
S.No	Unit Name	R	U	A	Remarks
1	Unit-III	1, 2	5(a) 5(b)	7(a) 7(b)	
2	Unit-IV	3, 4	6(a) 6(b)	8(a) 8(b)	
Total Questions		4	4	4	

SEMESTER END EXAMINATION						
Sl No	Unit No.	Questions to be set for SEE				Remarks
		R		U	A	
1	I	4	1	9(a)	13(a)	
2	II					
3	III		2	10(a)	14(a)	
4	IV					
5	V		3 (5, 6)	9(b) 11(a) 11(b)	13(b) 15(a) 15(b)	
6	VI		3 (7,8)	10(b) 12(a) 12(b)	14(b) 16(a) 16(b)	
Total Questions		8		8	8	

Legend:	Remembering (R)	1 Mark
	Understanding (U)	3 Marks
	Application (A)	5 Marks

Course Content

UNIT 1 - **Mechanical properties and Testing of Materials**

Duration: 10 Periods(L:6-T:4)

Mechanical Engineering Materials, Importance of their study with applications – Various mechanical properties of engineering materials - Tensile strength, Compressive strength, Ductility,

Malleability, Hardness, Toughness, Brittleness, Impact strength, Fatigue, Creep resistance. Testing of materials: Destructive testing tests on UTM to determine tensile, compressive and shear strengths – Tests on Brinell & Rock Well hardness test – Impact test on Izod & Charpy tester. Non destructive testing – Procedure for testing materials by X-ray, gamma ray, magnetic flux and ultrasonic testing.

UNIT 2 - **Structure of Materials and Iron Carbon Equilibrium Diagram**

Duration: 10 Periods(L:6-T:4)

Crystals of metals, Space lattices, Unit cell, three main types of metallic space lattices, namely Face Centered Cubic, Body Centered Cubic, Hexagonal Close Packed. Crystallisation of metal,

formation of grains by dendrite growth, grain boundary, grain size control, effect of grain size on properties – factors.**Iron - Carbon Equilibrium Diagram:**Cooling curve for pure metal. Allotropic forms of pure Iron - Iron carbon equilibrium diagram

UNIT 3 - Welding Duration: 10 Periods(L:6-T:4)

Introduction - Classification of welding processes - Advantages and limitations of welding. Principles of arc welding - Principle of gas (oxy – acetylene) welding - Welding procedures (arc & gas) - Soldering and Brazing techniques - Types and applications of solders & fluxes. Defects in welding - Testing and inspection - Brief description of MIG & TIG Welding

UNIT 4 - Drilling Duration: 10 Periods(L:6-T:4)

Type of drilling machines: sensitive & radial and their constructional detail and specifications - Drill bits: Terminology - geometry of twist drill - functions of drill elements - Operations: Drilling, reaming, boring, counter boring, counter sinking, tapping, spot facing and trepanning

UNIT 5 - Mechanical working of metals Duration: 10 Periods(L:6-T:4)

Introduction: Hot working and cold working - Hot working processes: rolling - types of rolling, two high mill, three high mills, four high mills, piercing or seamless tubing, drawing or cupping, spinning, extrusion - direct or forward extrusion, indirect or backward extrusion, tube extrusion, Impact extrusion - Effects of hot working of metals, advantages & limitations of hot working of metals. Cold working process:Rolling, drawing - wire drawing, tube drawing, bending, roll forming, angle bending, spinning, extrusion, squeezing, cold heading, thread rolling, peening - Effects of cold working of metals, advantages & limitations of cold working.

UNIT 6 - Lathe, Shaper, and Milling Duration: 10 Periods(L:6-T:4)

Lathe : Working Principle of Lathe - Types of Lathes - Engine lathe – construction details – Specifications - General operations: Turning, facing, taper turning - thread cutting, knurling, forming, drilling, boring, reaming, key way cutting. **Shaping :** Introduction to shaper - Constructional details and specifications of shaper - Operations on shaper. **Milling :**Introduction - Types of milling machines: plain, Universal, vertical - Constructional details – specifications - Milling operations

Reference Books

1. Engg. Materials - Pakirappa
2. Machine Tools - Hazra Chowdary
3.Workshop Technology - Hazra Chowdary

SUGGESTED LEARNING OUTCOMES

1.0 Mechanical properties and Testing of Materials

Identify the importance of various Engineering Materials and their applications in Mechanical industries. Analyze the different Properties of metals. Known the Difference between destructive and non-destructive tests of metals and identify the different non-destructive tests.

2.0 Structure of Materials and Iron Carbon Equilibrium Diagram

Known the meaning of space lattice, unit cell, space lattice and formation of grains by dendrite growth. Identify the allotropic forms of pure iron with temperatures, their crystal structures.

Construction of the iron carbon diagram and identifying various structures of the iron carbon system. Identification of salient points like Eutectic, Peritectic and Eutoctiods in the Iron Carbon diagram and Obtaining the composition of phases in a steel/cast Iron from the iron carbon diagram.

3.0 **Welding.**

Selection of joining processes and necessity of welding. Describe the principle of arc welding, gas welding, Soldering and Brazing. Know the different welding procedures in arc and gas welding along with soldering and brazing. Identifying the various defects in welds and know the reasons for the defects.

4.0 **Drilling**

Identify the varies types of drilling machines and working principle of drilling. Construct the line diagrams of the sensitive and radial drilling machines and Identify the parts of these machines and also know the different operations can perform on drilling machine.

5.0 Mechanical working of metals

Identifying the varies types of mechanical working of metals and Describe the working principle of hot rolling, piercing, spinning, extrusion and drawing. Identify various cold working processes such as rolling, bending and squeezing. Know the difference between cold working and hotworking.

6.0 Lathe, Shaper, and Milling

Write classification of lathes. Identify the different types of lathes, construction of line diagram and list the various operations on lathe

Suggested Student Activities

1. Each student should visit the Lab to know the materials used for mechanical operations
2. Each student should visit nearby workshops and industries to know the machine operations like lathe, drilling, milling, grinding etc.
3. Each student will do the report on types of operations can performed on machines.
4. Identify and prepare a list of materials used in the Different industrial applications.
5. Quiz, Seminars and Group discussion,
6. Surprise test

Suggested e-Resources:

1. www.wikihow.com
2. http://nptel.ac.in
3. www.packagingclinic.com
4. www.iip.in.com
5. https://pcri.org
6. https://www.youtube.com/watch?v=mmmcj53TNic

CO-PO Mapping Matrix

Course Outcome		CL	Linked PO	Teaching periods
CO1	Identify the various materials for manufacturing process for a particular application.	R/U/A	1,2,9	**6**
CO2	Analyze the mechanical properties of engineering metals and used in engineering applications.	R/U/A	1,2,9,10	**6**
CO3	Construct Iron-Carbon Equilibrium diagram and indicate the salient points.	R/U/A	1,2,6,9	**8**
CO4	Select the various types of Fabrication Process for Mechanical applications.	R/U	1,2	**10**
CO5	Identify the varies types of drilling machines and their operations	R/U/A	1,2,5	**8**
CO6	Classify the varies types of Forming operations and explain their principles	R/U/A	1,2,3,8,9,10	**10**
CO7	List the different metal cutting operations involved in manufacturing process.	R/U/A	1,2,8,10	**12**

Model Question papers

MODEL QUESTION PAPER

BOARD DIPLOMA MID-SEMESTER EXAMINATIONS (C-18)
D.PKGT –III - SEMESTER EXAMINATION
18PKG-302C - Engineering materials and Manufacturing Processes

TIME: 1 HOUR **MAXIMUM MARKS: 20**

PART –A ***MARKS: 4 X 1 = 4***

NOTE: Answer ALL questions. Each question carries ONE marks.

1. Define the "Fatigue" and "Creep".
2. What is Space lattice and draw a neat sketch of any one space lattice.
3. Sketch the cooling curve for pure Iron.
4. Define "Pearlite" and "Bainite".

PART –B ***MARKS:2 X3 = 6***

NOTE: Answer ALL questions. Each question carries THREE marks.

5.(a). Explain the following Mechanical properties.
(i) Brittleness. (ii) Ductility.

(OR)

5 (b) What is the effect of recrystallisation on properties of cold worked metals.

6 (a). What are the factor effecting the grain size of a metal ?

(OR)

6.(b). What are the different micro-constituents of "Iron and steel" explain any two.

PART –C ***MARKS:2 X5 =10***

NOTE: Answer ALL questions. Each question carries FIVE marks.

7(a). Draw "Iron Carbon equilibrium diagram" and explain.

(OR)

7(b). Explain the following Mechanical properties.
(i) Tensile strength. (ii) Compression strength.

8(a) Explain the following Mechanical properties.
(i) Malleability. (ii) Ductility.

(OR)

8(b). Define the "Toughness' and "Stiffness".

MODEL QUESTION PAPER

BOARD DIPLOMA SEMESTER END EXAMINATIONS (C-18)

D.PKGT – III - SEMESTER EXAMINATION

18PKG-302C - Engineering materials and Manufacturing Processes

TIME: TWO HOURS **MAXIMUM MARKS: 40**

PART –A ***MARKS: 8 X1 = 8***

NOTE: Answer ALL questions. Each question carries ONE marks.

1. Define the "Hardness' and "Stiffness".
2. Define "Pearlite" and "Cementite".
3. Define soldering and brazing ?
4. What are the work holding devices used in drilling?
5. What are the different types of extrusion methods?
6. Write about wire drawing process.
7. Define "Drilling" and "Boring".
8. What is Shapping?

PART –B ***MARKS:4 X3 =1 2***

Answer ALL questions. Each question carries THREE marks.

9 (a).What are the different types of drilling machines?

(OR)

9.(b).What are the squeezing operations used in metalworking? Explain Cold heading.

10(a).Explain about "Lathe Operations" with neat sketches?

(OR)

10.(b).Explain the following Mechanical properties.

(i) Brittleness. (ii) Ductility.

11(a).What are the different micro-constituents of "Iron and steel" explain any two.

(OR)

11.(b).Write advantages and disadvantages of welding.

12(a).Define "Milling",

(OR)

12.(b).What are the different types of milling?

PART –C ***MARKS:4 X5 =20***

Answer ALL questions. Each question carries FIVE marks.

13 (a).Draw the line diagram of shaper and specify the main parts?

(OR)

13 .(b).Explain about different "Milling" operations with neat sketch.

14 (a).Explain about " universal Milling machine"

(OR)

14 .(b).Explain working principle of Arc welding.

15 (a).Explain about Radial Drilling machine.

(OR)

15 .(b).What are the hot working processes? and explain hot rolling.

16 (a). What are the defects in welding? Explain.

(OR)

16 .(b).What are the Drilling machine operations? Explain.

QUESTION BANK

18PKG-302C - Engineering materials and Manufacturing Processes

PART –A

1. Define the "Hardness' and "Stiffness".
2. What is "Unit cell" and draw neat sketch of any two crystal systems.
3. Sketch the cooling curve for pure metal/compound.
4. Define "Cementite" and "Ledeburite".
5. Define the "Fatigue" and "Creep".
6. What is Space lattice and draw a neat sketch of any one space lattice.
7. Sketch the cooling curve for pure Iron.
8. Define "Pearlite" and "Bainite".
9. Define the "Toughness' and "Stiffness".
10. What is "Unit cell" and draw neat sketch of any two crystal systems.
11. Sketch the cooling curve for pure Iron.
12. Define "Pearlite" and "Cementite".
13. Define welding?
14. What are the different types of gas welding flames?
15. Write the Difference between pressure welding and fusion welding.
16. Explain about oxy-acetylene flames.
17. What are the steps involved in arc welding.
18. Define soldering and brazing ?
19. What are the tool holding devices used in drilling?
20. What are the work holding devices used in drilling?
21. What are the different types of drills?
22. What are the advantages and disadvantages of Cold working process?
23. What is Blanking and Piercing?
24. What are the advantages and disadvantages of hot working process
25. What are the different types of cold working processes?
26. What are the different types of extrusion methods?
27. Write about wire drawing process.
28. Define "Drilling" and "Boring".
29. Define "Reaming" and "Knurling".
30. What are the lathe operations?
31. Explain about taper turning, thread cutting
32. Define "Drilling" and "Boring".
33. Explain about taper turning, thread cutting".
34. What is Shapping?

35. Define “Milling”,
36. What are the different types of milling?
37. Define the term up-ward milling.
38. What are the different types of milling tools?
39. Define the term up-ward milling.
40. What are the different types of milling?

PART –B

1. Explain the following Mechanical properties.
   (a) Brittleness. (b) Ductility.
2. (a)What is the effect of recrystallisation on properties of cold worked metals.
   (a) What are the factor effecting the grain size of a metal ?
3. What are the different micro-constituents of “Iron and steel” explain any two.
4. Write advantages and disadvantages of welding.
5. Explain working principle of gas welding.
6. What are the different types of welding processes and explain.
7. What are the different types of drilling machines?
8. What are the squeezing operations used in metalworking? Explain Cold heading.
9. Explain about Direct and Indirect Extrusion process.
10. Explain about “Lathe Machine” with line diagram
11. Explain about “Lathe Machine main parts”
12. Explain about “Lathe Operations” with neat sketches?
13. Explain working principle of Shaper.

PART –C

1. Draw “Iron Carbon equilibrium diagram” and explain.
2. Explain the following Mechanical properties.
   (a) Tensile strength. (b) Compression strength.
3. Explain the following Mechanical properties.
   (a) Malleability. (b) Ductility.
4. Explain working principle of Arc welding.
5. What are the defects in welding? Explain.
6. What are the equipment and accessories used in arc welding? Explain.
7. Explain about Radial Drilling machine.
8. What are the Drilling machine operations? Explain.
9. What are the hot working processes? and explain hot rolling.
10. Draw the line diagram of shaper and specify the main parts?
11. Explain about different “Milling” operations with neat sketch.
12. Explain about “ universal Milling machine”
13. Explain about different “Milling” operations with neat sketch.

Conventional Packaging Materials

Course Title :	**Conventional Packaging Materials**	Course Code	**18PKG-303C**
Semester	**III**	Course Group	**Core**
Teaching Scheme in Hrs(L:T:P)	**30:15:0**	Credits	**3**
Methodology	**Lecture + Assignments**	Total Contact Hours :	**45/60Pds**
CIE	**60 Marks**	SEE	**40 Marks**

Pre requisites

This course requires the basic knowledge of Basics of packaging technology and Elements of packaging Technology

On completion of the course, the student will be able to :

Course Outcomes

CO1	Analyse the Pulping process and Manufacturing of Paper.
CO2	Classify the various paper, boards, used in packaging industry
CO3	Identify the various glass container raw materials and the manufacturing processes
CO4	How the composite containers classified and the methods to made.
CO5	Where the wood used as a packaging material, and name the different wood containers.
CO6	List the metallic packaging materials used in packaging industry, classify the aluminium collapsible tubes

MID SEM –I EXAM					
S.No	Unit Name	R	U	A	Remarks
1	Unit-I	1, 2	5(a) 5(b)	7(a) 7(b)	
2	Unit-II	3, 4	6(a) 6(b)	8(a) 8(b)	
Total Questions		4	4	4	

MID SEM –II EXAM					
S.No	Unit Name	R	U	A	Remarks
1	Unit-III	1, 2	5(a) 5(b)	7(a) 7(b)	
2	Unit-IV	3, 4	6(a) 6(b)	8(a) 8(b)	
Total Questions		4	4	4	

SEMESTER END EXAMINATION						
Sl No	Unit No.	Questions to be set for SEE				
		R			U	A
1	I	4	1		9(a)	13(a)
2	II					
3	III		2		10(a)	14(a)
4	IV					
5	V		3	5, 6	9(b) 11(a) 11(b)	13(b) 15(a) 15(b)
6	VI			7,8	10(b) 12(a) 12(b)	14(b) 16(a) 16(b)
Total Questions		8			8	8

Legend:		
	Remembering (R)	1 Mark
	Understanding (U)	3 Marks
	Application (A)	5 Marks

Course Content

UNIT 1 - **PAPER** **Duration: 10 Periods(L:6-T:4)**

Properties of paper and paper board, nomenclature of paper products - Main Packaging papers – Structural and general properties , definitions, physical characteristics - Mechanical properties, surface properties and optical properties - Manufacturing process.

UNIT 2 - **CORRUGATED FIBRE BOARD BOXES** Duration: 10 Periods(L:6-T:4)

Corrugated boxes – Raw materials, types of corrugated boards, types of flutes, plies - manufacturing processes and machines – creasing, cutting, printing slotting, stitching, gluing or taping, closing and printing – advantages, disadvantages and applications of Solid fiberboard boxes – honey comb boards,

UNIT 3 - GLASS CONTAINERS Duration: 10 Periods(L:6-T:4)

Raw Materials, manufacturing process, tabular containers - glass containers making – forming the container, semiautomatic process, annealing, inspection - Quality control – acceptance sampling test procedures - reduction of surface damage, current approaches to conserving or improving container strength, surface treatment – Closures - Defects in glass containers.

UNIT 4 - COMPOSITE CONTAINER **Duration: 10 Periods(L:6-T:4)**

Cylindrical boxes and composite containers - Manufacturing processes, body and functional barrier materials, lining materials - other barriers, types of closures and usage - other construction.

UNIT 5 - WOOD **Duration: 10 Periods(L:6-T:4)**

The nature of wood, wood for box making - defects in wood - plywood, Fibre building boards – board types and manufacture - processing and using techniques

UNIT 6 - METALLIC PACKAGING MATERIALS **Duration: 10 Periods(L:6-T:4)**

Packaging Metals, Black plate, Tin free steel, Aluminum foil -Metal cans construction, types of seam & joints, types of closures - Aluminum cans. Advantages, disadvantages and uses of steel

and aluminum cans - Aluminum collapsible tubes, Advantages, disadvantages and use, outline of manufacturing process,

Reference Books

1. Packaging – An Introduction. - Stanley Sacharow
2. Fundamentals of Packaging - F.A. Paine
3. The Packaging Users Hand Book - F.A. Paine
4. Hand Book of Package Engineering - J.F. Hanion

SUGGESTED LEARNING OUTCOMES

1.0 PAPER

Definition of paper and selection of raw materials for paper manufacturing. Types of paper and analyze the properties for suitability. able to know about Applications and advantages of paper and paper board in packaging.

2.0 CORRUGATED AND SOLID FIBRE BOARD BOXES

Definition of Corrugated boxes and selection of raw materials to full fill the package requirement. Types of CFB and analyze the properties for suitability. Able to know about manufacturing process, applications and advantages of CFB.

3.0 GLASS CONTAINERS

Able to selection of raw materials for Glass container manufacturing. Analyze the forming process to full fill the package requirement. Types of defects in glass container and their improvement processes.

4.0 COMPOSITE CONTAINERS

Identification of materials for Composite containers (body, lining) and manufacturing process. Analysis of other barriers, categorize Types of closures and applications

4.0 WOOD

Analyze the properties of wood with moisture contents and Identify the Defects in wood. Categorize types of wooden boxes, cases and crates, barrels and baskets.

6. METALLIC PACKAGING MATERIALS

Compare the Packaging Metals (Black plate, Tin free steel, Aluminum foil) with other materials. Develop different manufacturing methods for metal containers, types of seam & joints, types of closures, Improve the utilization of Aluminum cans, Metal drums and Aluminum collapsible tubes

Suggested Student Activities

7. Each student should visit library to refer to manual/Journals of Packaging related to packaging materials and components.
8. Each student should visit the Lab to know the materials used for packaging.
9. Each student will do the report on Types Different Packages available in the market
10. Prepare any one type of package carrying different food products in market.

11. Identify and prepare a list of materials used in the Different types of packaging applications.
12. Quiz and Group discussion
13. Surprise test

Suggested e-Resources:

7. **http://nptel.ac.in**
8. **www.packagingclinic.com**
9. **www.iip.in.com**
10. **https://pcri.org**

CO-PO Mapping Matrix

Course Outcome		CL	Linked PO	Teaching periods
CO1	Analyse the Pulping process and Manufacturing of Paper.	R/U/A	1,2,9	**8**
CO2	Classify the various paper, boards, used in packaging industy	R/U/A	1,2,9,10	**12**
CO3	Identify the various glass container raw materials and the manufacturing processes	R/U/A	1,2,6,9	**8**
CO4	How the composite containers classified and the methods to made.	R/U	1,2	**12**
CO5	Where the wood used as a packaging material, and name the different wood containers.	R/U/A	1,2,5	**8**
CO6	List the metallic packaging materials used in packaging industry, classify the aluminium collapsible tubes	R/U/A	1,2,3,8,9,10	**12**
				60

Model Question papers

MODEL QUESTION PAPER

BOARD DIPLOMA MID-SEMESTER EXAMINATIONS (C-18)
D.PKGT –III - SEMESTER EXAMINATION
18PKG-303C - CONVENTIONAL PACKAGING MATERIALS

TIME: 1 HOUR **MAXIMUM MARKS: 20**

PART –A ***MARKS: 4 X 1 = 4***

NOTE: Answer ALL questions. Each question carries ONE marks.

1. What are the chemical pulping methods explain briefly.
2. What are the Raw materials used for paper making ?
3. What are the applications of G and G paper ?
4. What are the functions of flute in corrugated board ?

PART –B ***MARKS:2 X3 = 6***

NOTE: Answer ALL questions. Each question carries THREE marks.

5 (a).Explain the manufacturing process of Paper with the help of neat sketch.

(OR)

5 (b).Explain about chemical pulping methods.

6 (a).What are the different closing methods of corrugated board and explain.

(OR)

6 (b).Draw two-fly and three-fly corrugated board and indicate the parts.

PART –C ***MARKS:2 X5 =10***

NOTE: Answer ALL questions. Each question carries FIVE marks.

7(a).Explain the manufacturing process of Paper with the help of neat sketch.

(OR)

7(b).What are the different pulping processes and explain them.

8(a).How the moisture effect on the properties of “wood”, explain ?

(OR)

8(b).Explain the manufacturing process of metal containers.

MODEL QUESTION PAPER

BOARD DIPLOMA SEMESTER END EXAMINATIONS (C-18)
D.PKGT – III - SEMESTER EXAMINATION
18PKG-303C - CONVENTIONAL PACKAGING MATERIALS

TIME: TWO HOURS **MAXIMUM MARKS: 40**

PART –A ***MARKS: 8 X1 = 8***

NOTE: Answer ALL questions. Each question carries ONE marks.

1. What are the secondary Raw materials used for paper making ?
2. Draw two-fly and three-fly corrugated board and indicate the parts.
3. What are the defects in glass container explain with neat sketch ?
4. What are the disadvantages of composite container.
5. What are the physical properties of wood ?
6. What are the Mechanical properties of "Wood" ?
7. What are the applications of natural Fibres ?
8. What are the raw materials used for metallic containers ?

PART –B ***MARKS:4 X3 =1 2***

Answer ALL questions. Each question carries THREE marks.

9(a).Explain the manufacturing process of Paper with the help of neat sketch.

(OR)

9(b).What are the defects in glass container explain with neat sketch ?

10(a).Explain Glass terminology with neat sketch.

(OR)

10(b).Write down the applications of composite container.

11(a).Explain involute winding composite containers.

(OR)

11(b).What are the different types of defects in timber ?

12(a).What are the advantages and applications of aluminum collapsible tubes?

(OR)

12(b).What are different types of "Tin plate" Containers and explain ?

PART –C ***MARKS:4 X5 =20***

Answer ALL questions. Each question carries FIVE marks.

13(a).What are the different pulping processes and explain them.

(OR)

13(b).What are the different closing methods of corrugated board and explain.

14(a).What type of adhesives are used in corrugation process.

(OR)

14(b).What are the two different type of composite containers and there manufacturing processes.

15(a).How the moisture effect on the properties of "wood", explain ?

(OR)

15(b).Explain the manufacturing process of metal containers.

16(a).What are the advantages and applications of aluminium collapsible tubes?

(OR)

16(b).Explain the two-fly corrugated board manufacturing process with help of neat sketch.

QUESTION BANK

18PKG-303C - CONVENTIONAL PACKAGING MATERIALS

PART –A

1. What are the secondary Raw materials used for paper making ?
2. What is Deinking process, explain ?
3. Define cellulose and draw it's molecular structure ?
4. What is Mechanical pulping method explain briefly?
5. What is cellulose and draw molecular structure ?
6. What are the chemical pulping methods explain briefly.
7. What are the Raw materials used for paper making ?
8. What are the applications of G and G paper ?
9. Draw two-fly and three-fly corrugated board and indicate the parts.
10. What are the functions of flute in corrugated board ?
11. Draw three-fly and five-fly corrugated board and indicate the parts.
12. Write down about the components of corrugated board and explain ?
13. What are the components of corrugated board and explain ?
14. Draw three-fly and five-fly corrugated board and indicate the parts.
15. What are the functions of liners in corrugated board ?
16. Draw 5-fly and 7-fly corrugated board and indicate the parts.
17. What are the defects in glass container explain with neat sketch ?
18. What are the different glass neck finish methods ?
19. Explain the Glass terminology with neat sketch.
20. What are the raw materials used in glass manufacturing process ?
21. What are the properties of Glass ?
22. Write applications of glass container
23. Write applications of glass container.
24. What are the advantages of composite container.
25. What are the components of composite container explain with neat sketch.
26. What are the disadvantages of composite container.
27. What are the physical properties of wood ?
28. What are the Mechanical properties of "Wood" ?
29. What are the applications of natural Fibres ?
30. What are different types of "Tin plate" Containers and explain ?
31. What are the raw materials used for metallic containers ?
32. What are different types of Tin plate Containers and explain ?

PART –B

1. Explain the manufacturing process of Paper with the help of neat sketch.
2. Explain about chemical pulping methods.
3. Explain about continuous and batch digesters, explain with the help of neat sketch.
4. Write down the types of "papers" used in packaging and properties of Tissue paper.

5. What are the defects in glass container explain with neat sketch ?
6. Explain Glass terminology with neat sketch.
7. Write the steps to be followed for manufacturing of glass containers.
8. what are the glass container testing methods and explain ?
9. what are the glass container testing methods and explain ?
10. What are the defects in glass container explain with neat sketch ?
11. Write the steps to be followed for manufacturing of glass containers.
12. Explain Glass terminology with neat sketch.
13. Write down the applications of composite container.
14. Explain involute winding composite containers.
15. What are the different types of defects in timber ?
16. What are the advantages and applications of aluminum collapsible tubes?
17. Write properties and applications of metal containers.
18. Write the properties and applications of Aluminum foil.

PART –C

1. Explain the manufacturing process of Paper with the help of neat sketch.
2. What are the different pulping processes and explain them.
3. Write down the types of papers used in packaging and there properties.
4. What are two different digesters and explain with the help of neat sketch.
5. (a) What are the different closing methods of corrugated board and explain.
   (b) What type of adhesives are used in corrugation process.
6. Explain the two-fly corrugated board manufacturing process with help of neat sketch.
7. (a) What is Minimum Blank Area.
   (b) What are the closing methods of corrugated board and explain.
8. Explain the two-fly corrugated board manufacturing process with help of neat sketch.
9. What are the two different type of composite containers and there manufacturing processes.
10. (a) Explain spiral winding composite containers.
    (b) Write down the applications of composite container.
11. How the moisture effect on the properties of “wood”, explain ?
12. Explain the manufacturing process of metal containers.
13. Write properties and applications of metal containers.
14. What are the advantages and applications of aluminium collapsible tubes?
15. Write the properties and applications of Aluminum foil.

Ancillary Packaging Materials & Bulk Packaging

Course Title :	**Ancillary Packaging Materials & Bulk Packaging**	Course Code	**18PKG-304C**
Semester	**III**	Course Group	**Core**
Teaching Scheme in Hrs(L:T:P)	**30:15:0**	Credits	**3**
Methodology	**Lecture + Assignments**	Total Contact Hours :	**45/60Pds**
CIE	**60 Marks**	SEE	**40 Marks**

Pre requisites

On completion of the course, the student will be able to :

Course Outcomes

CO1	Analyze various cushioning materials and describe their properties.
CO2	Analyze the types of adhesives and apply the concept of adhesion in the packaging.
CO3	Elaborate the functions of various closures and choose a closure for a specific application
CO4	Choose the right label for a specific packaging application.
CO5	Analyze the types of straps , tapes and describe their application in different packages.
CO6	Describe the significance of codings and coatings in packaging.

MID SEM –I EXAM					
S.No	Unit Name	R	U	A	Remarks
1	Unit-I	1, 2	5(a) 5(b)	7(a) 7(b)	
2	Unit-II	3, 4	6(a) 6(b)	8(a) 8(b)	
Total Questions		4	4	4	

MID SEM –II EXAM					
S.No	Unit Name	R	U	A	Remarks
1	Unit-III	1, 2	5(a) 5(b)	7(a) 7(b)	
2	Unit-IV	3, 4	6(a) 6(b)	8(a) 8(b)	
Total Questions		4	4	4	

SEMESTER END EXAMINATION							
Sl No	Unit No.	Questions to be set for SEE					Remarks
		R			U	A	
1	I	4	1		9(a)	13(a)	
2	II						
3	III		2		10(a)	14(a)	
4	IV						
5	V		3	5, 6	9(b) 11(a) 11(b)	13(b) 15(a) 15(b)	
6	VI			7,8	10(b) 12(a) 12(b)	14(b) 16(a) 16(b)	
Total Questions		8			8	8	

Legend:	Remembering (R)	1 Mark
	Understanding (U)	3 Marks
	Application (A)	5 Marks

Course Content

UNIT 1 - ADHESIVES

Duration: 10 Periods(L:6-T:4)

Principles of adhesion - definition, theory of adhesion, factors affecting strength of bond (setting time, open time, tack). Adhesive systems - Aqueous, solvent, emulsion, pressure sensitive, heat sensitive - Classification of adhesives – animal, vegetable, mineral, inorganic, organic – their origin, nature, general properties, advantages & disadvantages, applications & uses.

UNIT 2 - CUSHIONING

Duration: 10 Periods(L:6-T:4)

Fundamentals of cushioning-physical concept in cushioning, impact load, energy & concept of shock at complex , rate of declaration & impulse time, distribution of shock, shock absorption - Package cushioning systems & materials - Consideration of nature of product to be protected, properties of cushioning materials fatigue & thickness loss, creep, moisture content, water absorption, corrosive effect, mould growth & dusting-Space fillers – powders & granules, wrapping materials, shredded materials - Less resilient materials: wood wool - expanded polystyrene, moulded filing - corrugated fibreboard - Resilient materials – rubberized hair, crimped rubberized hair, polyurethane foams (flexible), bonded polyurethane chip foams, expanded polyethylene air bubble film - Corner pieces ,Selection of bulk cushions & others factors - Cushioning devices: Bonded rubber shock mounts – shear mounting, conical mounts, metalistic buckling mounts, tabular mounting, delta mounting (silent block) - Sheet spring systems – coil springs, leaf-lote springs. 'PNEUCUSH' mounts (Wilmount).

UNIT 3 - SEALS, CLOSURES & DISPENSING DEVICES

Duration: 10 Periods(L:6-T:4)

Seals - general requirements, for a good seal, mechanics of good seal, the importance of thread engagement & thread pitch, applying the correct turning torque to screw caps, the importance of vacuity & ullage, Closures & dispensing devices - Types of closures, selection of closures, normal seals, vacuum tight seals, pressure tight seals, secondary function of seals, inviolability, non refill ability, dispensing & measuring, pouring devices, child resistance - sales appeal - Manufacture of closures – metal caps, moulded caps made from thermosetting plastics, moulded caps made from thermoplastic plastics - Choosing right type of closures liners, compatibility between closure & the contents of the containers, facing materials, closure design, methods of application of closures, sealing methods, combination closures.

UNIT 4 - LABELS, LABELINGINCLUDING MARKING & BAR CODES

Duration: 10 Periods(L:6-T:4)

Why labels are necessary, types of labels – paper-plain paper labels - pre-gummed paper labels, thermoplastic paper labels, pressure sensitive - paper labels - Methods of application – hand, semi automatic & automatic - Adhesives for instant tack labels, delayed action label, ceramic printing - Heat transfer labeling, Shrink sleeve labeling - Label forms & shapes - Machinery & equipment for labeling, Tags - Bar code, symbology, Applications, Printing Bar code Labels, soft ware for Bar code and Code verification - Radio frequency Identification Technologies (RFTY).

UNIT 5 - CYLINDRICAL AND RECTANGULAR SHIPPING PACKAGES

Duration: 10 Periods(L:6-T:4)

Wooden, casks & plywood kegs – wet & cooperage, ply wood barrels, production methods, types & styles of containers, types of closures & methods of closing - Drums – Metal, fiber, plastics & composites - Timber & plywood cases & crates - basic types – nailed wooden boxes, crates, wire bound boxes & crates, waterproof linings, closure of cases -Corrugates & solid fiberboard cases - Manufacture of corrugated containers, & solid fibre board cases - Hazards of transport & assessment of fiberboard packages, use of corrugated & solid board - Case styles - Industry trends – automation, retail packages, competition, case quality & quality control, packaging applications of hard board & insulating board - Plastic crates - Materials – plastic crates for milk, for beer & for soft drinks, for agricultural products & foodstuff - Corrugated Fibre Board Pallet, Thermocole with PE Pallet.

UNIT 6 - FLEXIBLE SHIPPING PACKAGES, PALLETS & UNIT LOADS

Duration: 10 Periods(L:6-T:4)

Textile sacks & bags, bales & baling Introduction,. Sack & bag manufacture, nomenclature, finishing treatments, sizes of sacks & bags, standardization, lined sacks & bags, methods of closing - Bales – covering, forming, compression strapping & marking Multi-wall paper sacks – introduction types, open mouth & valved sacks, materials & manufacture, filling & closing of sacks, storage & handling, present & future use Bales, bags – mailing bags & sacks Plastic film sacks – development & advantages of plastic sacks for fertilizer, heavy duty polyethylene sacks – valve, laminated, co-extruded laminated cross ply laminated sacks. Sacks of other materials – woven plastic - Methods of palletizing & utilization, equipment for handing pattetized & utilized load, wooden pallet construction & specification Pallet & securing unit loads – High level palletizers, low level palletizers, bulk palletizers, robotic palletizers. Load

restraints – Adhesives, strapping, enveloping - Pallet utilization, de-palletisation - Economic factors - Strapping – (steel & non metallic).

Reference Books

1. Packaging – An Introduction. - Stanley Sacharow
2. Fundamentals of Packaging - F.A. Paine
3. The Packaging Users Hand Book - F.A. Paine
4. Hand Book of Package Engineering - J.F. Hanion

SUGGESTED LEARNING OUTCOMES

1.0 ADHESIVES

Know the Principle concept and Theories of adhesion,
Write the definition of adhesive
List the various adhesives used commonly
Demonstrate knowledge and characteristics of bonding process

2.0 CUSHIONING

Write the definition of cushioning
Know the Functions of cushioning materials
Select the cushioning materials
Know the Properties of cushioning materials
Classify various cushioning materials
Draw Cushioning curves
Write the Importance of spring system mounts

3.0 SEALS,CLOSURES AND DISPENSING DEVICES

Write the General requirements for a good seal closure system
Know the functions of a closure system.
Outline the Concepts involved in efficient closure system
Write the Factors of closures
Label various caps and closures

4.0 LABELS , LABELING INCLUDING MARKING & BAR CODES

Write the Purpose of label
List out various types of labels
Know the use and importance of labels
Demonstrate the Necessity and Identification of Markings
Select the marking methods for Dangerous cargo labels and general cargo
Give the Recommended size, Color, Positioning of marking codes
List the various Marking symbols.
Know the Radio frequency Identification Technologies (RFTY)

5.0 CYLINDRICAL AND RECTANGULAR SHIPPING PACKAGES

Write about wooden casks and ply wood kegs
Choose the production methods of Cooperage and Ply wood barrels
Compare Drums – Metallic, fiber, plastics & composites
Know the Effect of moisture on wood, seasoning of wood
Identify the Physical & Mechanical properties, Defects in timber
Write the Types of joints used in cylindrical and rectangular shipping packages
Developing the models of Crates, Baskets, Barrels,
Select the material for crates;
Utilize the cylindrical and rectangular shipping packages For Food stuff

6.0 FLEXIBLE SHIPPING PACKAGES, PALLETS & UNIT LOADS

List out various sacks
Compare Textile sacks and Multi wall paper sacks
Identify the Test Methods of palletizing & unitization,
Recommend equipment for handling palletized
Write pallet and unit load
Examine the unitized loads wooden pallet construction

Suggested Student Activities

14. Each student should visit library to refer to manual/Journals of Packaging related to ancillary packaging materials and components.
15. Each student should visit the Lab to know the ancillary materials used for packaging.
16. Each student will do the report on Types Different Packages available in the market
17. Prepare any one type of package carrying different food products in market.
18. Identify and prepare a list of ancillary materials used in the Different types of packaging applications.
19. Quiz and Group discussion
20. Surprise test

Suggested e-Resources:

11. **http://nptel.ac.in**
12. **www.packagingclinic.com**
13. **www.iip.in.com**
14. **https://pcri.org**

CO-PO Mapping Matrix

Course Outcome		CL	Linked PO	Teaching periods
CO1	Analyze various cushioning materials and describe their properties.	R/U/A	1,2,9	**8**
CO2	Analyze the types of adhesives and apply the concept of adhesion in the packaging.	R/U/A	1,2,9,10	**12**
CO3	Elaborate the functions of various closures and choose a closure for a specific application	R/U/A	1,2,6,9	**8**
CO4	Choose the right label for a specific packaging application.	R/U	1,2	**12**
CO5	Analyze the types of straps , tapes and describe their application in different packages.	R/U/A	1,2,5	**8**
CO6	Describe the significance of codings and coatings in packaging.	R/U/A	1,2,3,8,9,10	**12**
				60

MODEL QUESTION PAPER

BOARD DIPLOMA MID-SEMESTER EXAMINATIONS (C-18)
D.PKGT – III - SEMESTER EXAMINATION
18PKG-304C - ANCILLARY PACKAGING MATERIALS AND BULK PACKAGING

TIME: 1 HOUR **MAXIMUM MARKS: 20**

PART –A ***MARKS: 4 X 1 = 4***

NOTE: Answer ALL questions. Each question carries ONE marks.

1. What is cushioning factor?
2. What is Ullage?
3. Classify adhesive with examples.
4. Name different types of Labels?

PART –B ***MARKS:2 X3 = 6***

NOTE: Answer ALL questions. Each question carries THREE marks.

5(a).Write about the importance of thread engagement?

(OR)

5(b).Define unitizing. bales.

6(a).Write about the manufacturing of adhesive tapes?

(OR)

6(b).What are the types of closures?

PART –C ***MARKS:2 X5 =10***

NOTE: Answer ALL questions. Each question carries FIVE marks.

7(a).Explain various functions of cushioning materials.

(OR)

7(b).Explain the mechanism of a good seal and thread engagement.

8(a).Explain about the preparation of wet and dry cooperages with sketch

(OR)

8(b).Write about nailed wooden boxes.

MODEL QUESTION PAPER

BOARD DIPLOMA SEMESTER END EXAMINATIONS (C-18)

D.PKGT – III - SEMESTER EXAMINATION

18PKG-304C - ANCILLARY PACKAGING MATERIALS AND BULK PACKAGING

TIME: TWO HOURS **MAXIMUM MARKS: 40**

PART –A ***MARKS: 8 X1 = 8***

NOTE: Answer ALL questions. Each question carries ONE marks.

1. Define adhesive? Give examples of natural adhesives?
2. Define Seal, Closure?
3. List out any four types of shipping packages.
4. Define marking and identification marks
5. What is waterproof lining and materials?
6. What are the molded caps?
7. Define child resistance caps.
8. Define palletizing

PART –B ***MARKS:4 X3 =1 2***

Answer ALL questions. Each question carries THREE marks.

9(a).What are the different types of loads? Explain.

(OR)

9(b).Compare starch and sodium silicate?

10(a).What are the factors that affect adhesion?

(OR)

10(b).What are dispensing devices and draw two diagrams

11(a).Differentiate plastic film sacks and multi wallpaper sacks.

(OR)

11(b).Name different spring systems?

12(a).Differentiate among the crates used for beer, soft drinks and agricultural products.

(OR)

12(b).Write about the equipments used for handling the loads?

PART –C ***MARKS:4 X5 =20***

Answer ALL questions. Each question carries FIVE marks.

13(a).Explain about metal cans with neat sketches.

(OR)

13(b).Write about bulk packaging. Explain briefly the types of it.

14(a).Explain about effects of moisture on wood.

(OR)

14(b).Explain the types of adhesion theories?

15(a).Explain types of labels briefly.

(OR)

15(b).Explain the rectangular shipping containers?

16(a).Write about bulk packaging. Explain briefly the types of it.

(OR)

16(b).Explain about flexible shipping packages.

QUESTION BANK

18PKG-304C - ANCILLARY PACKAGING MATERIALS AND BULK PACKAGING

PART-A

1. What is cushioning factor?
2. Define Adhesive Adhesion and Adherent?
3. Define Cushioning?
4. Name different types of Labels?
5. Define adhesive? Give examples of natural adhesives?
6. Define Seal, Closure and Dispensing device?
7. What is Ullage?
8. Classify adhesive with examples.
9. List the different types of identification marks used in packaging.
10. List out any four types of shipping packages.
11. What is a fiber-board? Give its applications.
12. What do you know about jute bags and bales?
13. What are the packaging requirements for glass bottles and PET bottles?
14. Give any four applications of film sacks.
15. Define wooden casks and plywood kegs.
16. Give any four applications of film sacks.
17. Define marking and identification marks
18. What is waterproof lining and materials?
19. What is cushioning factor?
20. Define Adhesive Adhesion and Adherent?
21. Define Cushioning?
22. Name different types of Labels?
23. Write the definition of adhesive.
24. What is meant by cushioning?
25. State any three functions of cushioning materials.
26. What is meant by cushioning factor?
27. What are the types of closures?
28. What are the molded caps?
29. Define child resistance caps.
30. What are the different types of drum.
31. Name the designing crates.
32. What are waterproof linings and materials?
33. Write the applications of film sacks?
34. Define palletizing
35. Define unitizing.
36. Define bales.
37. Give the classification of adhesives?
38. What is plywood?
39. Give the applications of adhesives?
40. What is lamination?
41. What are Child Resistant Caps?

PART-B

1. Compare starch and sodium silicate?
2. What are the factors that affect adhesion?
3. Write about the manufacturing of adhesive tapes?
4. How will you select cushioning materials?
5. Write about plastic crates.
6. What is the need of Cushioning?
7. Write any four functions of cushioning devices.
8. Why do you prefer child resistant caps? Explain four of them with the help of neat sketch.
9. Write short notes on (a) palletizing and (b) unitization.
10. Differentiate plastic film sacks and multi wallpaper sacks.
11. Write about wrapping and stretch wrapping.
12. Write about nailed wooden boxes.
13. What are dispensing devices and draw two diagrams
14. What are the different types of loads? Explain.
15. What are the factors that affect adhesion?
16. What are the theories of adhesive?
17. Write the manufacturing process of adhesive tapes.
18. Write about the importance of thread engagement?
19. Write about wet and dry cooperages.
20. What are rectangular shipping containers?
21. What are the factors that affect the strength of wood?
22. Write types of load and explain them.
23. Draw the sketches of spring system and give its purpose?
24. Explain the types of adhesion theories?
25. What is the need of cushioning?
26. Name different spring systems?
27. Classify adhesives? Give the applications of them?
28. What is meant by bar code? Give any four applications.
29. Differentiate among the crates used for beer, soft drinks and agricultural products.
30. What do you know about drums and its functions? Give the composite of plastic drums.
31. Differentiate between plastic film sacks and multiwall paper sacks.
32. Give four applications of film sacks.
33. What are the types of labels?
34. What is meant by dispensing devices?
35. Draw the dispensing devices.
36. What are plywood barrels?
37. How will you design crates?
38. Write about space fillers.
39. What is meant by cushioning material?
40. What are the types of cushioning materials?
41. Write the applications of cushioning materials.
42. What are the types of steel spring systems?
43. Write the comparison between starch and sodium sillicate and write its disadvantages.
44. Give the definitions of palletization and unitization.
45. What are the equipments used for handling the loads?

46. What are the industrial trends in automation and retail packages and quality control in corrugated and solid board case styles?
47. Write about different types of strapping.
48. What are the materials used for different products as agricultural products and food and liquid items?
49. What are the hazards of transportation? How will you protect the packages to prevent them?
50. What are the package requirements for glass bottles and pet bottles?
51. What are the rectangular shipping containers?
52. Give the definitions of palletization and unitization.
53. Write about the equipments used for handling the loads?

PART-C

1. Explain the theories of adhesion?
2. Explain with the help of sketches of Child Resistant Caps?
3. Explain various functions of cushioning materials.
4. What is cushioning factor? Explain the formula.
5. Explain the mechanism of a good seal and thread engagement.
6. Explain about palletization
7. Explain about unitization.
8. Explain wet cooperages?
9. Explain dry cooperages?
10. Explain any three methods of applications of labels.
11. Explain their production methods plywood.
12. Explain the rectangular shipping containers?
13. Explain the flexible shipping containers?
14. Explain the cylindrical shipping containers?
15. Explain the classification of adhesives?
16. Explain and Draw the sketches of spring system and give its purpose?
17. Explain the types of adhesion theories?
18. Explain and Draw Flow chart for Cushioning Systems?
19. Explain about the preparation of wet and dry cooperages with sketch
20. Explain about metal can with neat sketch.
21. Explain the equipment used for handling of palletizing and unitized loads?
22. Explain child resistance caps.
23. Explain types of labels briefly.
24. Explain them with the help of neat sketch.
25. Explain child resistance caps with neat sketch.
26. Explain different types of drums.
27. Explain about metal cans with neat sketches.
28. Explain about wooden pallet construction and specification
29. Explain about effects of moisture on wood.
30. Write about bulk packaging. Explain briefly the types of it.
31. Explain about flexible shipping packages.

Basic Electrical and Electronics Engineering

Course title	Basic Electrical and Electronics Engineering	**Course code**	18PKG305C
Semester	III	**Course group**	Core
Teaching scheme in periods	36:24(L:T)	**Credits**	3
Methodology	Lecture+Tutorial	**Total Contact Hours**	50Hrs./60 Pds
CIE	60 Marks	**SEE**	40 Marks

PREREQUISITES

Enthusiasm to learn the course, the basic knowledge of Physics and Mathematics and particularly Electrical fundamentals at secondary school level.

CORSE OUTCOMES

On successful completion of the course, the students will be able to

COURSE OUTCOME		**LINKED PO**
CO1	Understand and Explain the concepts of Basic electrical circuits, Electromagnetism and the Induced E.M.F.	1,2,8,9,10
CO2	Correlate the induced E.M.F. concepts to explain the construction and working of D.C.Machines.	1,2,5,6,8,9,10
CO3	Summarize the characteristics of a.c. waveforms, interpret and solve their effects in 1-phase and 3-phase circuits.	1,2,8,9,10
CO4	Correlate the induced E.M.F. concepts to explain the construction and working of A.C.Machines.	1,2,5,6,8,9,10
CO5	Explain the construction and working of Electrical Measuring instruments. Comprehend and follow Electrical Safety procedures and Protection aspects	1,2,8,9,10
CO6	Understand and explain the concept of PN junction diode, transistor configuration and types of logic gates.	1,2,5,6,8,9,10

MID SEM –I EXAM					
S.No	Unit Name	R	U	A	Remarks
1	Unit-I	1, 2	5(a) 5(b)	7(a) 7(b)	
2	Unit-II	3, 4	6(a) 6(b)	8(a) 8(b)	
Total Questions		4	4	4	
MID SEM –II EXAM					
S.No	Unit Name	R	U	A	Remarks
1	Unit-III	1, 2	5(a) 5(b)	7(a) 7(b)	
2	Unit-IV	3, 4	6(a) 6(b)	8(a) 8(b)	
Total Questions		4	4	4	

SEMESTER END EXAMINATION							
Sl No	Unit No.	Questions to be set for SEE					Remarks
		R			U	A	
1	I	4	1		9(a)	13(a)	
2	II						
3	III		2		10(a)	14(a)	
4	IV						
5	V		3	5, 6	9(b) 11(a) 11(b)	13(b) 15(a) 15(b)	
6	VI			7,8	10(b) 12(a) 12(b)	14(b) 16(a) 16(b)	
Total Questions		8			8	8	

Legend:	Remembering (R)	1 Mark
	Understanding (U)	3 Marks
	Application (A)	5 Marks

CONTENTS

UNIT – I Electrical engineering fundamentals PERIODS: 10

Definitions: Ohm's Law, Laws of resistance work, power, energy with units. Kirchoff'sLaws, Definitions and units of magnetic field strength, flux, flux density, permeability, reluctance. Definitions and units electric field, field strength, permittivity, capacitance.,Faraday's laws of Electro – magnetic induction. Dynamically and statically induced e.m.f., Lenz's Law, Fleming's right hand rule, Inductance – self and mutual – coefficient of coupling. Energy stored in a magnetic field.

UNIT – II D.C.Machines PERIODS: 10

D.C Generator: Principle of operation - Parts of generator and materials used - Types of generators and schematic diagrams - E.M.F equation, voltage and current relations - Nomenclature used for determining armature, field and inter-pole windings - Power flow diagram - Welding Generator.D.C motor: Principle of operation - Types of motors and schematic diagrams - Back e.m.f and speed equation and relation between voltages and currents - Starters and their necessity - Connection diagram of 3 point starter - Speed control – Field and Armature control - Applications of motors.

UNIT – III A.C.Fundamentals PERIODS: 10

Definition – alternating current, voltage amplitude, time period frequency, instantaneous value, Average value, r.m.s. value, form factor - Graphical representation of Alternating quantities - Phase difference - A.C. Circuits - Single phase series circuits – Definition of poly-phase and 3 Ø circuits - Phase difference in 3 Ø - Star and delta connections, definitions of phase values and line values.

UNIT – IV A.C.Machines PERIODS: 10

Alternators – principle of working. Constructional features of alternators. Speed and frequency relations. Transformers working principle. Single phase transformers - Voltage ratio, Current ratio, Turns ratio - Welding transformer - 3-Phase Induction Motor - Working principle, Construction - Squirrel cage and Wound Rotor - Single phase Induction Motors - Types and applications of single phase induction motors.

UNIT – V Electrical measuring instruments & Safety procedures

PERIODS: 10

Construction and principle of operation of moving coil permanent magnet typeammeter and voltmeter and moving iron ammeter and voltmeter - Construction and working principle of Dynamometer type wattmeter - Single phase induction type Energy meter - Electrical safety Procedures - Effects of shock and burns - Remedial procedures to be adopted in case of electrical shocks - Plate earthing - Pipe earthing.

UNIT – VI **Basic Electronics** **PERIODS : 10**

Semi-conductors-N-type, P-type. Behaviour of PN junction diode. Introduction of PNP, NPN transistors. Transistor configuration – Zener diodes. Types of Gates OR, AND, NAND, NOR

REFERENCE BOOKS

1.	Theraja B.L.	-	A Text Book of Electrical Engg. and Electronics.
2.	Mehtha.V.K	-	Principles of Electronics
3.	Gupta	-	Fundamentals of Elec. Engg.
4.	Uppal	-	A Text Book of Elec.Engg& Electronics.

SUGGESTED LEARNING OUTCOMES

Upon completion of the course the student shall be able to

1.0 Basic Electrical Fundamentals.

Know about Ohm's Law.

Write the Laws of Resistance.

Compare Work, Power and Energy from electrical and mechanical aspects and understand their units.

Understand and write Kirchhoff's laws.

Know Faraday's laws of Electro Magnetic Induction.
Describe dynamically and statically induced E.M.F.
Write Lenz's Law.
Write Fleming's Right Hand rule.
Write energy stored in a magnetic field.

2.0 D.C. Machines.

Understand the working principle of D.C. Generators.

Know the constructional features of D.C. Generators and materials used.

Classify D.C. Generators and draw their schematic diagrams.

Write E.M.F equation of D.C. Generator and solve formula substitution problems.

Write the relation between currents and voltages in various D.C generators.

Sketch the connection of welding generator.

Write the principle of operation of D.C. Motors.

Classify D.C. motors and draw their Schematic diagrams..

Write back e.m.f in D.C. motors.

Write the relation between currents and voltages in various D.C. motors.

Write formula for speed of D.C. Motor in terms of supply voltage, current and flux.

Write necessity of starters for D.C. motors.

Describe with sketch the connection diagram of a D.C. 3 point starter.

Write the speed control procedures a) Armature control, b) Field control

List the applications of D.C. motors

3.0 A.C. Fundamentals

Understand A.C. Fundamentals

Know Phase and phase difference.

Write the concept of Poly-phase and 3-phase system.

Comprehend Star and Delta connections.

Write the relation between Line and Phase values.

Solve simple conversion problems on line and phase values.

4.0 A.C.Machines

Write working principle of alternators.

Know the frequency and speed relations in alternators.

Write working principle of transformers and their ratings.

Write and relate Transformation, Turns, Voltage and Current ratios.

Describe the operation of a welding Transformer with sketch.

Understand working Principle of 3-phase induction motors.

List the applications of 3-phase induction motors.

Describe the working principle of Single-phase induction motors.

List out types of 1-phase induction Motors.

Write Applications of 1-phase induction Motors.

5.0 Electrical Measuring Instruments and Safety Procedures.

Write the construction and working principle of Moving Coil instruments.

Write the construction and working principle of Moving Iron instruments.

Write the construction and working principle of Dynamometer type Wattmeter.

Write the construction and working principle of 1-phase induction type energy meters.

Write effect of electrical shock and burn.

Write the remedial procedures to be adopted in case of electric shocks.

Know the purpose of earthing of electrical equipment and machinery.

Describe the procedure of i) Pipe earthing and ii) Plate earthing.

6.0 Basic Electronics

Classify materials as conductor, semi-conductor and insulator.
Distinguish between intrinsic and extrinsic semiconductors.
Describe the formation of P type and N type materials.
Identify majority and minority carriers in P and N type materials.
Write the formation of P.N junction diode.
Describe the working of P.N junction diodes with forward bias and reverse bias.
Understand the working of P.N.P and N.P.N transistors.
Draw the different transistor configuration.
Sketch the input and output characteristics of C.B, C.E and C.C configurations.
Write collector current expression in CB and CE mode in terms of ICBO.
Describe the operation of Zener diode.
Distinguish between Zener and Avalanche break-down.
List the types of Gates OR, AND, NAND and NOR

a. **Note : Where ever mentioned, simple formula substitution problems only be solved and no problems in the other specific objectives.**

SUGGESTED STUDENT ACTIVITIES

1. Student visits Library to refer to Manual of Electrical Safety.
2. Student inspects the available equipment in the Lab to identify the components
3. Quiz
4. Group discussions
5. Surprise test

Suggested e-Resources:

1.www.khanacademy.org
2. www.ocw.mit.edu/courses/electriical-engineering
3. www.nptel.ac.in

COURSE-PO ATTAINMENT MATRIX

CO1	Understand and Explain the concepts of Basic electrical circuits, Electromagnetism and the Induced E.M.F.	1,2,8,9,10
CO2	Correlate the induced E.M.F. concepts to explain the construction and working of D.C.Machines.	1,2,5,6,8,9,10
CO3	Summarize the characteristics of a.c. waveforms, interpret and solve their effects in 1-phase and 3-phase circuits.	1,2,8,9,10
CO4	Correlate the induced E.M.F. concepts to explain the construction and working of A.C.Machines.	1,2,5,6,8,9,10
CO5	Explain the construction and working of Electrical Measuring instruments.Comprehend and follow Electrical Safety procedures and Protection aspects	1,2,8,9,10
CO6	Understand and explain the concept of PN junction diode, transistor configuration and types of logic gates.	1,2,5,6,8,9,10

Course	**Program outcome**									
	1	2	3	4	5	6	7	8	9	10
CO1	2	1			-		-	1	2	2
CO2	2	3			1	1		1	2	2
CO3	2	3						1	2	2
CO4	2	3			1	1		1	2	2
CO5	2	3						1	2	2
CO6	2	2			1	1		1	2	2
Level 3- Highly Addressed, Level 2-Moderately Addressed, Level 1-Low Addressed.										

MODEL QUESTION PAPER

BOARD DIPLOMA EXAMINATIONS

III Semester (SEE)

Course Title: Basic Electrical and Electronics Engineering

Course Code: 18PKG305C

Time: 3 hrs **Max marks:80**

PART – A

1) Answer ALL Ten questions **(10X2 =20)**
2) Each question carries two marks.
3) Answers should be brief and straight to the point.

PART - B

1) Answer any FOUR out of Six questions (4x5=20)
2) Each question carries five marks.
3) Answers should be comprehensive and the criterion for valuation is the content but not the length of the Answer

PART – C

1) Answer any FOUR out of Six questions (4x10=40)
2) Each question carries ten marks.
3) Answers should be comprehensive and the criterion for valuation is the content but not the length of the Answer.

MACHINE DRAWING

Course title:	**MACHINE DRAWING**	Course Code:	**18PKG-306P**
Semester:	**III**	Course group:	**Core**
Teaching scheme in Hrs (LTP):	**7.5:0:37.5**	Credits:	**1.5**
Type of course:	**Lecturer + Practice**	Total contact Hrs :	**45periods**
CIE:	**60 Marks**	SEE:	**40 Marks**

Pre requisites

This course requires the basic knowledge of Engineering Drawing.ie.18PKG-106P and 18PKG-206P

Course Content and Blue Print of Marks for SEE

Unit No	Unit Name	Periods	Questions for SEE	Marks Weightage			Weightage		
			R	U	A	5M	40M	total	(%)
PART-A									
1	Introduction, Fastening Devices,	9		3		3		15	10%
2	Piping Layouts and Joints, Welding Fabrication Drawing symbols	6		1		1		5	10%
PART-B									
3	ASSEMBLY-1 Assembly drawings of Gib and Cotter joint ,Knuckle Joint, Muff couplings ,universal coupling, Screw Jack	15			1		1	40	40%
PART-C									
4	ASSEMBLY-II Assembly Drawings of Bearings(Foot step Bearing, Plummer block), Stuffing Box, Eccentric	15			1		1	40	40%
	Total	45						100	100%

COURSE CONTENT

1.0 Introduction

Importance of Machine Drawing - Brief revision of 1st and 3rd angle projections - Understand the concepts of Orthographic projections and Sectional views.

Fastening Devices

Temporary and Permanent fastenings and their areas of application-thread nomenclature, forms of screw thread profiles, metric, B.A., Acme, Knuckle, etc.

Bolts and Nuts: Specification of bolts and nuts, Different types of bolted joints (like using through bolts, studs, screws etc.,) in different applications. Purpose of lock nuts and their Types - Keys and cotters: Types of keys and cotters: Difference between key and cotter uses.

Rivets and Riveted joints: Types and proportions and specification of rivets: Different types of riveted joints: Lap, butt-single row, double row etc., chain riveting – calculation of diameter of rivet: Pitch and arrangement of rivets in row – use – of standard proportions.

Exercises:1

1. Thread Nomenclature and forms of screw thread profiles.
2. Exercises in drawing – bolted connections using standard proportions.
3. Drawing of various types of lock nuts & types of keys indicating their proportionate dimensions.
4. Exercise in drawing riveted joints using standard proportions: Single row, double row (chain) in lap and butt joints (single & double strap).

2.0 Piping layouts

Classification of pipes and tubes- Components of pipes lay-out.-Screw fitting bend, elbow, tee, lateral Cross-nipple, reducing socket and plug - Unions: Screwed ground and flanged - Valves: Gate valve: angle valve, check valve - Various conventional symbol used for the above components.

Exercises: 2

1. Single line diagram of pipe layout one exercises.
2. Double line diagram of pipe layout one exercise.

Welded fabrication drawings

Different types of weld and their basic symbols including sectional representation as per table of I.S. standards, fillet, square butt, single V-Butt, double V-Butt, single bevel butt, double bevel butt, stud, bead (edge or seal) spot, seam. - Elements of welding symbol and their standard location the symbol as per IS standards reference code arrow head, weld symbol supplementary symbol dimensions of welds, method of welding process, special reference - Significance of arrow & position of arrow head significance of reference line as per I.S. standards with reference to fillet, V-Butt an stud welds.- Supplementary symbols and special instructions: surface of reference line; as per I.S. standards with reference to fillet, V-Butt an stud welds.- Dimensions of welds: length, location and spacing of welds as per I.S., B.I.S., standards with showing dimensions required on a welding - Need of special reference

Exercises: 3

1. Drawing tables and figs. Referred in the contents above taking form I.S. standards.
2. Dimensioning a given welding drawings as per I.S., SP-46-1988.
3. Preparing working drawing of welding fabrication from given data.

3.0 Assembly Drawings-I

Need and functions of assembly and detailed drawings - Steps in preparing assembly drawings - - Exercises in preparing assembly drawings of commonly available engineering components.

Exercises: 4

Draw the views / sectional views of

1. Jib and cotter joint assembly
2. Knuckle joint assembly
3. Assembly of muffs coupling (solid & split) coupling
4. Screw jack assembly

4.0 Assembly Drawings-II

With the knowledge gained by the above exercises the students shall be able to draw exercises on Bearings, Socket and spigot joint, protective type flanged coupling ,eccentric, flexible coupling, sleeve and cotter joint, , foot step bearing, Plummer block, Stuffing box.

REFERENCE BOOKS

1. T.S.M & S.S.M in respect of Technical Drawing by TTTI, Madras
2. Machine Drawing by A.C. Parkinson.
3. Machine Drawing by Jones & Jones.
4. Machine Drawing by N.D. Bhatt.

State Board of Technical Education and Training, Telangana

Semester End Examination Model Question paper

DPKG III semester MACHINE DRAWING Examination

Corse Code:18PKG306P

Course Name: MACHINE DRAWING

Max.Marks:40 **Duration:2 hours**

PART-A 5 X 2 = 10

INSTRUCTIONS: (1) Answer any two Questions
(2) Each question carries FIVE Marks.
(3) Answer should be neat & clear with all the necessary Dimensions.
(4) All Dimensions are in mm. Choose suitable Scale.

1. Draw the following Thread Profiles with proportions.
   (a) BUTTRESS (b) WHITH WORTH
2. Draw the views of a Square headed bolt.
3. Draw a double riveted chain lap joint connecting two plates of 6mm Thick.
4. Draw the symbols of the following welded joints.
   (a) concave fillet Weld (b) single v-butt weld (c) Spot weld
   (d) Seam Weld (e) Square Butt Weld

PART –B 30

INSTRUCTIONS: (1) Answer any ONE question.
(2) Each question carries thirty Marks.
(3) All Dimensions are in mm and assume missing Dimensions if any and choose suitable scale.

5. Assemble all the parts of the KNUCKLE JOINT and Draw the
   (a) Sectional Front View 20
   (b) Top View 10

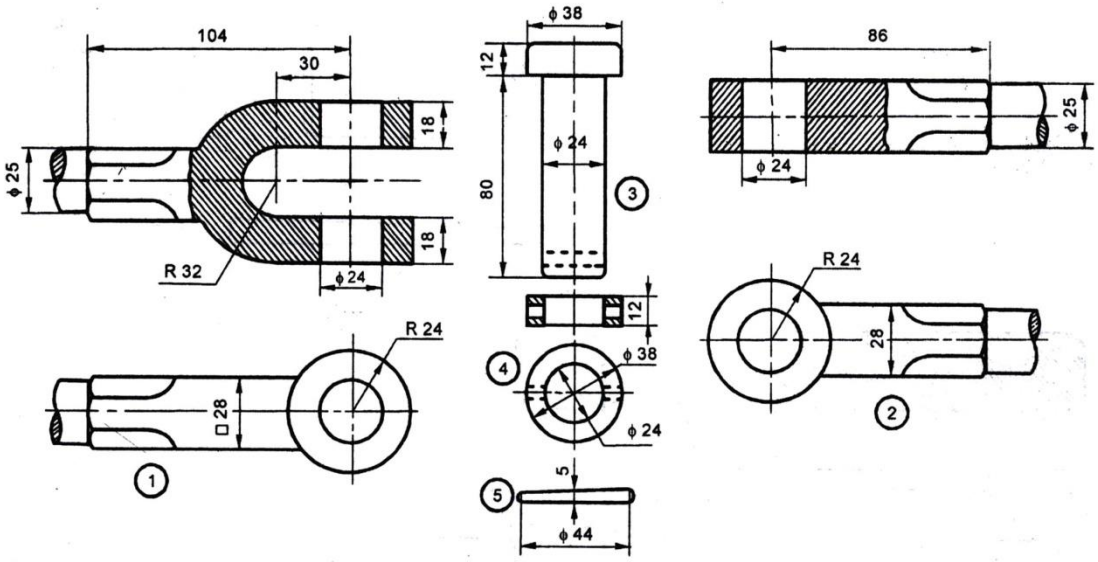

Parts list

No.	Name	Matl	Qty
1	Fork end	F S	1
2	Eye end	F S	1
3	Pin	M S	1
4	Collar	M S	1
5	Taper pin	M S	1

KNUCKLE JOINT

6. Assemble all the parts of the ECCENTRIC and draw the

(a) Half Sectional Front View 20

(b) Right side View 10

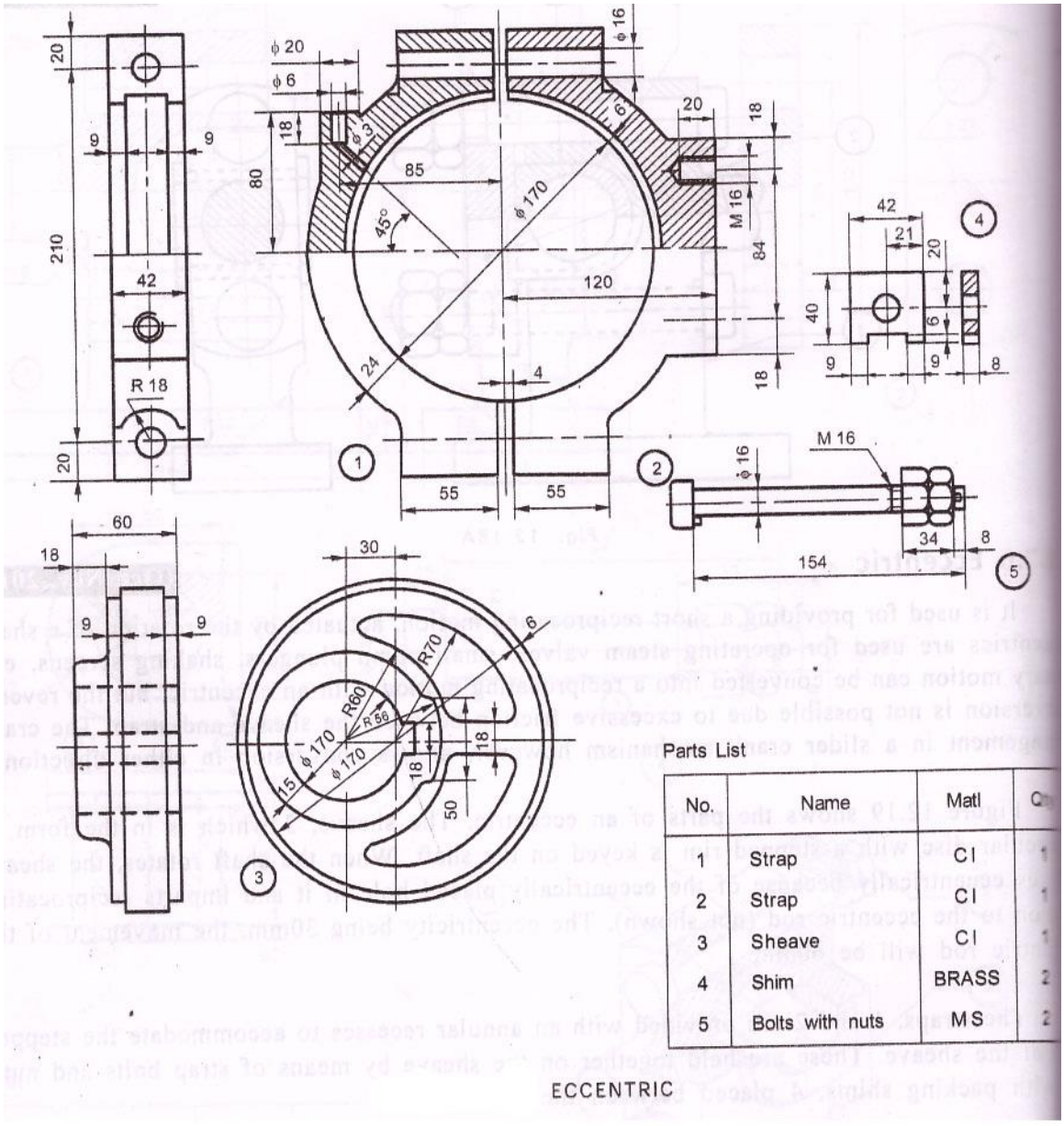

Parts List

No.	Name	Matl	Qty
1	Strap	CI	1
2	Strap	CI	1
3	Sheave	CI	1
4	Shim	BRASS	2
5	Bolts with nuts	MS	2

ECCENTRIC

State Board of Technical Education, Telangana State
C18-MID 1 Examination
Model Paper-

PKG-306 MACHINE DRAWING

TIME : 1 Hours Max. Marks: 20

PART – A Marks: 04 X 05 M = 20M

INSTRUCTIONS: (1) Answer any FOUR Questions

(2) Each question carries FIVE Marks.

(3) Answer should be neat & clear with all the necessary Dimensions.

(4) All Dimensions are in mm. Choose suitable Scale.

1. Draw a Thread profile of sellers
2. Draw the following welding symbols (a)concave fillet weld(b)convex
3. double v-butt weld(c)seam weld(d) single v-butt weld(e) single J-butt weld
4. Draw the following piping joint symbols(single line)

   (a)Tee (b) plug(c)Gate valve(d)Lateral(e)Union
5. Draw the square thread with proportions
6. Draw the following piping joint symbols(single line)

   (a)coupling(b)cap(c)Tee(d)plug(e)union

State Board of Technical Education, Telangana State
C18-MID 2 Examination
Model Paper-
PKG-306 MACHINE DRAWING

TIME : 1 Hours Max. Marks: 20

INSTRUCTIONS: (1) Answer any ONE question.

(2) Each question carries TWENTY Marks.

(3) All Dimensions are in mm and assume missing Dimensions if any and choose suitable scale.

1. Assemble all the parts of the KNUCKLE JOINT and Draw the Sectional Front View

2.Assemble all the parts of universal coupling and draw the sectional front view.

MID –I MODEL PAPER

18PKG 306 P MACHINE DRAWING

TIME: 1 HOUR **Max.Marks:20**

Instructions: Answer any four questions .Each question carries Five Marks

4 x 5=20

1. Draw the SQURE Thread Profiles with proportions.
2. Draw the views of a Square headed bolt.
3. Draw a double riveted chain lap joint connecting two plates of 6mm Thick.
4. Draw the symbols of the following welded joints.
   (a) concave fillet Weld (b) single v-butt weld (c) Spot weld
   (d) Seam Weld (e) Square Butt Weld
5. Draw the following piping joint symbols(single line)
   (a) Tee (b)Plug(c) Gate valve(d)Lateral(e)Union
6. Draw a Hexagonal headed bolt with nut and washer of 20 mm dia

MID –II MODEL PAPER

18PKG306 P MACHINE DRAWING

TIME: 1 HOUR **Max.Marks:20**

Instructions: Answer any ONE questions .Each question carries TWENTY Marks

1. **Draw the sectional front view of the Knuckle joint as**
2. **Draw the sectional front view of the cotter joint**

18PKG307P, PAPER BASED MATERIALS TESTING LAB PRACTICE

Course Title :	**Paper Based Materials Testing Lab Practice**	Course Code	**18PKG-307P**
Semester	**III**	Course Group	**:Core**
Teaching Scheme in Periods(L:T:P)	**7.5:00:37.5**	Credits	: **1.5**
Methodology	**Lecture + Practical**	Total Contact Hours :	**:45Pds**
CIE	**60 Marks**	SEE	**40 Marks**

Pre requisites

This course requires the basic knowledge of 18PKG-303C

Course Content and Blue Print of Marks for SEE

Unit No	Unit name	Hours/ Periods	Questions for SEE			Marks weightage	%Weightage
			Handling	Manipulation	Precision		
1.	Thickness of Paper	3	15	10	15	40	100
2.	Grammage of paper(GSM)	3	15	10	15	40	100
3.	Water proof ness/Cobb test for paper & paper board IS (4006-1966)	6	15	10	15	40	100
4.	Moisture content of paper - Dry	6	15	10	15	40	100
5.	Ash content of paper - Dry	3	15	10	15	40	100
6.	Stack load test for CFB	6	15	10	15	40	100
7.	Porosity of paper	6	15	10	15	40	100
8.	Smoothness of paper	6	15	10	15	40	100
9.	Opacity/Transparency test for paper/poly film	6	15	10	15	40	100
	Total	45					

Course outcomes

Course Outcome		CL	Linked PO	Teaching Hours
CO1	Measure the thickness and GSM of the given paper.	R/U/A	1,2,3,4,7,9,10	
CO2	Evaluate the moisture absorption capacity of non-observing type paper	R/U/A	1,2,3,4,7,9,10	
CO3	Determine the Moisture and Ash content of given paper.	R/U/A	1,2,3,4,7,9,10	
CO4	Estimate the Stock load capacity of CFB box	R/U/A	1,2,3,4,7,9,10	
CO5	Measure the porosity and smoothness of Paper.	R/U/A	1,2,3,4,7,9,10	
CO6	Examine the Opacity of different colour papers.	R/U/A	1,2,3,4,7,9,10	

Course Contents

1. Thickness of Paper
2. Grammage of paper(GSM)
3. Water proof ness/Cobb test for paper & paper board IS (4006-1966)

4. Moisture content of paper - Dry
5. Ash content of paper - Dry
6. Stack load test for CFB
7. Porosity of paper
8. Smoothness of paper
9. Opacity/Transparency test for paper/poly film

State Board of Technical Education and Training,Telangana

Semester End Examination Model Question paper

DPKGT III semester practical Examination

Corse Code:18PKG-307P **Duration:3 hours**

Course Name: Paper Based Materials Testing Lab Practice **Max.Marks:40**

Instructions to the Candidate:

(i)Answer any One of the following Questions.

(ii)Record the results on a graph sheet if required , and conclude your observation of the experiment

(iii) Draw the diagram for illustration ,choose appropriate values when not mentioned in the question

1. Determine the Thickness of Paper of given paper and repeat the experiment for different samples.
2. Determine the GSM of different given papers experimentally and compare with each other value.
3. Compute the Water absorption capacity of non- observing type paper with the help of COBB equipment
4. Compute the Moisture content in given papers
5. Compute the Ash content in given papers
6. Calculate Resistance capacity of a Corrugated board box in stack Position/condition
7. Determine the porosity of given Papers/sample
8. Determine the Smoothness of given Papers/sample
9. Determine the Opacity/Transparency test for paper/poly film

ANCILLARY PACKAGING MATERIAL TESTING LAB PRACTICE

Course Title :	**Ancillary Packaging Material Testing Lab Practice**	Course Code	**18PKG-308P**
Semester	**III**	Course Group	**:Core**
Teaching Scheme in Periods(L:T:P)	**7.5:00:37.5**	Credits	: **1.5**
Methodology	**Lecture + Practical**	Total Contact Hours :	**:45Pds**
CIE	**60 Marks**	SEE	**40 Marks**

Pre requisites

This course requires the basic knowledge of 18PKG-304C

Course Content and Blue Print of Marks for SEE

Unit No	Unit name	Hours/ Periods	Questions for SEE			Marks weightage	%Weightage
			Handling	Manipulation	Precision		
1.	To find shear resistance of an adhesive on a tape/label.	3	15	10	15	40	100
2.	To find peel strength, bond strength of an adhesive on label.	6	15	10	15	40	100
3.	To find the tack of self-adhesive tape or a label by rolling ball tack test.	6	15	10	15	40	100
4.	To find opening and closing torque for closures.	6	15	10	15	40	100
5.	To perform strapping on a CFB box.	6	15	10	15	40	100
6.	To perform taping on a CFB box.	6	15	10	15	40	100
7.	To find the scuff resistance of printed label.	6	15	10	15	40	100
8.	To find tensile strength of a label.	6	15	10	15	40	100
	Total	45					

Course outcomes

Course Outcome		**CL**	**Linked PO**	**Teaching Hours**
CO1	Determine peel / bond strength of an adhesive.	R/U/A	1,2,3,4,7,9,10	
CO2	Perform shear resistance test on tape/label.	R/U/A	1,2,3,4,7,9,10	
CO3	Determine tack of a self-adhesive tape or a label by Rolling Ball Tack Tester.	R/U/A	1,2,3,4,7,9,10	
CO4	Determine opening and closing torque for closures.	R/U/A	1,2,3,4,7,9,10	
CO5	Effectively perform strapping and taping of a CFB Box.	R/U/A	1,2,3,4,7,9,10	

Course Contents

1. Shear resistance of an adhesive on a tape/label.
2. Peel strength, bond strength of an adhesive on label.
3. The tack of self-adhesive tape or a label by rolling ball tack test.
4. Opening and closing torque for closures.
5. Perform strapping on a CFB box.
6. Perform taping on a CFB box
7. The scuff resistance of printed label.
8. Tensile strength of a label.

State Board of Technical Education and Training,Telangana

Semester End Examination Model Question paper

DPKGT III semester practical Examination

Corse Code:18PKG-308P **Duration:3 hours**

Course Name: Ancillary Packaging Material Testing Lab Practice **Max.Marks:40**

Instructions to the Candidate:

(i)Answer any One of the following Questions.

(ii)Record the results on a graph sheet if required , and conclude your observation of the experiment

(iii) Draw the diagram for illustration ,choose appropriate values when not mentioned in the question

1. Determine the Shear resistance of an adhesive on a tape/label.
2. Determine the Peel strength, bond strength of an adhesive on label.
3. Compute The tack of self-adhesive tape or a label by rolling ball tack test.
4. Calculate Opening and closing torque for closures.
5. Perform strapping on a CFB box.
6. Perform taping on a CFB box
7. Determine the The scuff resistance of printed label.
8. Determine the Tensile strength of a label.

Electrical Technology Lab Practice

Course Title	**Electrical Technology Lab Practice**	Course Code	**18PKG309P**
Semester	III	Course Group	Core
Teaching Scheme in Hrs(L:T:P)	7.5:0.0:30	Credits	1.5
Methodology	Lecture+Practice	Total Contact Hours :	37.5Hrs/45Pds
CIE	60 Marks	SEE	40 Marks

Pre requisites

This course requires the basic skills of Handling Domestic tools,this course also requires the basic knowledge of basic mathematics at secondary school level.

Unit No	**Unit name**	**Periods**	**Questions for SEE**	**Marks weightage**	**%of Weightage**
			Handling/Manipulation/ Precision		
1	**Network Laws & Theorems**	09	**1**	**40**	**100**
2	**Calibration of meters**	09	**1**		
3	**Measurement of Power**	09	**1**		
4	**Speed control of D.C.Shuntmotors**	09	**1**		
5	**Earthinhg& Safety**	09	**1**		
	Total	**45**	**5**	**40**	**100**

Note:

1. Student can answer any one question out of 4 questions.
2. To pass in practical Exam student should acquire 50% marks in both CIE and SEE separately and CIE & SEE put together.

On completion of course the student should be able to

CO1	Identify and use the tools and equipment in Fitting Shop
CO2	Acquire skill in basic fitting operations
CO3	Identify and use the tools to perform forging operations
CO4	Identify and use the tools to perform Carpentry operations
CO5	Identify and use the tools to perform operations in sheet metal shop

COURSE CONTENTS

I Verify Network Laws & Theorems

1. a) Verify Ohm's Law
   b) Verify the limitations of Ohm's law
2. Verify Kirchoff's current Law
3. Verify Kirchoff's Voltage law

II Calibrate the different meters

4. Calibrate Dynamometer type of wattmeter
5. Calibrate single phase Energy meter

III Measure Power in DC and AC circuit

6. Measure power across a Resistor using voltmeter and ammeter when connected across a DC supply
7. Measure power and Power factor in 1 - Ǿ inductive circuit by using Wattmeter, Volt meter and Ammeter when connected across an AC supply

IV PerformSpeed control of DC Shunt Motor

8. Armature / Rheostatic control method
9. Field control method

V DemonstrateEarthing and Safety

10. a) Demonstrate Pipe Earthing
    b) Demonstrate Plate Earthing
11. Demonstrate Procedure of first aid on Electric shock

Safety Precautions

General Safety Precautions to be observed by the student for all Electrical laboratory Practices

1. Every student has to bring insulated tool kit and follow the general safety precautions throughout the lab sessions
2. Whenever handling/using a meter check for 'zero' position of the pointer and adjust for 'zero' position if there is any deviation

Competencies and key competencies to be achieved by the student

S.No	Experiment title	Competencies
I (1a,b, 2,3)	Verification of Network Laws & Theorems	• Draw the relevant circuit diagram • Select proper supply and load. • Select proper meters with proper ranges • Select proper wires to make connections as per circuit diagram • Ensure that all the meters are connected with proper polarity • Perform the experiment by carefully following the experimental procedure and precautions • Observe the readings without any scope for errors and tabulate
II (4,5)	Calibration of meters	• Short M & C terminals of wattmeter • Connect for proper Current range. • Calculate Multiplication factor • Calculate P, Error, %Error • Draw graph between W and % Error
III (6,7)	Measure Power in DC and AC circuit	• Select proper supply and load. • Select proper meters with proper ranges • Short M & C Terminals of wattmeters and connect for proper current coil range • Find out the M.F of Wattmeter • Reverse wattmeter terminals for negative readings (Lead values) • Calculate P, power factor(cos Ø)

IV **(8,9)**	Perform Speed control of DC Shunt Motor	• Draw the relevant circuit diagram • Select the proper DC supply voltage • Choose the proper range of voltmeter, ammeter and rheostat. • Make the connections according to circuit diagram. • Ensure that all the instruments are connected in proper polarity • Keep the Rheostat connected to armature in maximum position in Rheostatic control method • Keep the Rheostat in field in minimum position in Field control method • Observe the speed variation with respect to speed
V **(10)**	Demonstrate Earthing	• . Draw Earthing diagram with specifications • Select suitable GI plate, GI wire and funnel with wire mesh • Prepare the earth pit of 1.5 m below the surface of the ground • Place Earth plate in vertical position • Draw GI wire to the GI pipe fastened to GI plate / copper plate with bolts & nuts. • Pour sand, char coal and salt in alternate layers of about 15 cm around the earth pipe. • Test the earth resistance with Megger. • Verify the earth resistance.
(11)	Practice Safety Precautions.	• Practice the various first aid techniques. • Know the safety precautions.

COURSE CONTENT

(I) Network Laws & Theorems

Ohm's Law - limitations of Ohm's law-.Verification of Ohms Law - Kirchoff's current Law- Kirchoff's Voltage law.

(II) Calibration of meters

Dynamometer type of wattmeter-Single phase Energy meter

(III) Measurement of Power

Across a Resistor in DC circuit- Across an Inductive circuit in an AC circuit.

(IV) PerformSpeed control of DC Shunt Motor by

Rheostatic control method - Field control method

(V) Earthing and Safety

Demonstrate Pipe Earthing, Plate Earthing, First aid.

Course Outcome (CO)		Cognizant Level	Linked Program Outcomes (PO)	Teaching periods
CO1	Identify and use the tools and equipment in Fitting Shop	R/U/A	1,2,3,4,9,1	5
CO2	Acquire skill in basic fitting operations	R/U/A	1,2,3,4,9,10	6
CO3	Identify and use the tools to perform forging operations	R/U/A	1,2,3,4,9,10	11
CO4	Identify and use the tools to perform Carpentry operations	R/U/A	1,2,3,4,9,10	12
CO5	Identify and use the tools to perform operations in sheet metal shop	R/U/A	1,2,3,4,9,10	11
R: Remembering, U: Understanding, A: Applying				

Communication Skills and Life Skills

Course Title	**Communication Skills and Life Skills**	Course Code	**18 Common 310 P**
Semester	**III**	Course Group	**Foundation**
Teaching Scheme in Periods- L: T:P	**15:0:30**	Credits	**1.5**
Methodology	**Lecture + Practical**	Total Contact Hours	**45 Periods (3 Periods per Week)**
CIE	**60 Marks**	SEE	**40 Marks**

Rationale:

This course is designed to impart communication skills and life skills to the students of diploma which will help them a great deal in personal and professional fronts.

Prerequisites:

This course requires the basic knowledge of vocabulary, grammar, and four language learning skills, viz. Listening, Speaking, Reading and Writing.

Course Outcomes:

	At the end of the course the students will have the ability to:
Listening Skills	Identify the main or the central idea. Listen for specific details. Learn the pronunciation.
Communication Skills – I	Learn relevant vocabulary to make introductions. Learn to introduce oneself in formal and informal situations. Learn vocabulary and expressions useful for describing objects Describe objects
Communication Skills – II	Learn vocabulary to talk about the past Describe the incidents that happened in the past Learn the techniques of organising the matter / content for one-minute speech. Speak fluently and accurately using appropriate body language.

Life Skills – I	Think positively. Develop positive attitude. Overcome negative attitude. Know the importance of setting goals. Set goals using SMART features.
Life Skills – II	Know the reasons for a problem. Learn to overcome problems. Learn the various techniques to solve the problems. Learn to make proper decisions on time. Think 'out of the box'. Learn to be creative. Think innovatively. Think critically.
Life Skills – III	Know how to be a leader. Learn the qualities of a good leader. Learn the qualities of a good team. Learn the advantages and disadvantages of a team. Manage time effectively. Learn various time management techniques. Learn the importance of prioritisation.

CO-PO Matrix

	Course Outcome		Linked PO
CO 1	Listening for main idea and specific details	**R/U/A**	**1, 2, 3, 4, 5,7,8, 9,10**
CO 2	Introduce oneself and Describe Objects	**R/U/A**	**1,2,3,8,9,10**
CO 3	Talk about the past and speak fluently for one minute	**R/U/A**	**1,2,3,7,8.9,10**
CO 4	Develop positive attitude and set short term and long term goals	**R/U/A**	**1,2,3,7,8,9,10**
CO 5	Learn to solve a problem, make decisions and think innovatively	**R/U/A**	**1,2,3,7,8,9,10**
CO6	Learn to become a good team member and leader	**R/U/A**	**1,2,3,7,8,9,10**

Course Contents:

I. Listening Skills **Duration: 9**

1. Listening – I
    - Digital Camera
    - A Dialogue
    - Wild Animal / Human conflict
2. Listening – II

- A Recipe
- A Telephone conversation
- An Interview

II. Communication Skills – I **Duration:6**

3. Introducing Oneself
4. Describing Objects

III. Communication Skills – II **Duration:6**

5. Talking About the Past
6. Just A Minute

IV. Life Skills – I **Duration:6**

7. Attitude
8. Goal Setting

V. Life Skills – II **Duration:9**

9. Problem Solving and Decision-Making Skills
10. Critical Thinking & Creativity

VI. Life Skills – III **Duration:9**

11. Leadership and Teamwork
12. Time Management

Suggested Student Activities:

- Listening Comprehension
- Seminars
- Paper Presentations
- Line ups for introducing oneself
- Describing persons / places / things
- Picture description
- Role Plays
- Dumb charades
- What is in the bag? (Identify the objects)
- Games using Online Dictionaries
- Sharing the information using emails, chats and groups
- Just A Minute
- Writing diary events
- Find a solution to the problem
- Making innovative things through recycling
- Creating advertisements
- Five-minute activities on Life Skills
- Watching videos on life skills and making presentations
- Case studies

Evaluation Pattern:

I. Continuous Internal Examination: **60 Marks**

a. **Mid Sem- I** 20 marks

Syllabus:

i. Listening Skills
ii. Communication Skills - I

b. **Mid Sem – II** 20 Marks

Syllabus:

i. Communication Skills - II
ii. Life Skills - I

c. **Internal assessment**: 20 marks

i. Seminars: 10 marks
ii. Assignments: 5 marks
iii. Lab record submission: 5 marks

II. Semester End Examination : 40 Marks

a. Listening: 10 Marks
b. JAM or Role plays: 15 Marks
c. *Viva Voce* on any life skills topic : 15 Marks

References:

Flint, Chrisand Jamie Flockhart*Listening: A2 (Collins English for Life: Skills)*Collins. 2013

Brown, Stephen E. English in Everyday Life. McGraw-Hill Education.2008

Mohanraj, Jayashree. ***Let Us Hear Them Speak: Developing Speaking-Listening Skills in English*.Sage. 2015**

Susan Earle – Carlin. *Q Skills for Success: Listening and Speaking 5: Student Book with Online Practice*. Oxford University Press. 2013

Kumar, Sanjay and Pushpa Latha. *Communication Skills: A Work Book*.**Oxford University Press. 2018**

Carnegie, Dale.*The Leader in You*. Simon & Schuster: 1995

Carnegie, Dale.*The Art of Public Speaking*. Prabhat Prakashan. NewDelhi.2013

Kaye, Martin. *Goal Setting (Workbook Included): Goals & Motivation: Introduction To A Complete & Proven Step-By-Step Blueprint For Reaching Your Goals (Goal Setting Master Plan 1).* Kindle Edition. MK Coaching.2016.

West, Steven. *Critical Thinking Skills: Practical Strategies for Better Decision making, Problem-Solving and Goal Setting.* **Kindle Edition.2018**

Tracy, Brain. *Goals*. Berret-Koehler PublishersInc. San Francisco. 2017

Tracy, Brain. *Master your Time Master your Life.* Penguin Random House Inc. New York. 2017

Sean Covey . *The 7 Habits of Highly Effective Teens.* Simon and Schuster,2011

E-Learning Resources:

http://www.bbc.co.uk/worldservice/learningenglish/youmeus/learnit/learnitv39.shtml

https://www.examenglish.com/leveltest/listening_level_test.htm

https://www.oxfordonlineenglish.com/listening?utm_referrer=https%3A%2F%2Fwww.google.co.in%2F

https://takeielts.britishcouncil.org/prepare-test/free-ielts-practice-tests/listening-practice-test-1

https://learnenglish.britishcouncil.org/en/listening

https://www.cambridgeenglish.org/learning-english/activities-for-learners/?skill=listening

https://www.businessenglishsite.com/business-english-listening.html

BOARD DIPLOMA EXAMINATION (C-18)
THIRD SEMESTER 18 COMMON-310P
COMMUNICATION SKILLS AND LIFE SKILLS
MID SEM - I

Time : 1 Hour **Total Marks: 20 Marks**

Part – A **10 marks**

1. Listening Comprehension: 5 X 2 = 10

(Teacher should give the questions before reading the passage given below)

Florence Nightingale was an English social reformer and a statistician, and the founder of modern nursing. She was born in Florence, Italy, on May 12, 1820. Part of a wealthy family, Nightingale defied the expectations of the time and pursued what she saw as her God-given calling of nursing during the Crimean War. She and a team of nurses improved the unsanitary conditions at a British base hospital, greatly reducing the death count. Her writings sparked worldwide health care reform, and in 1860 she established St. Thomas' Hospital and the Nightingale Training School for Nurses. A revered hero of her time, she died on August 13, 1910, in London. Nightingale came to prominence while serving as a manager and trainer of nurses during the Crimean War, in which she organized care for wounded soldiers. She gave nursing a favourable reputation and became an icon of Victorian culture, especially in the persona of "The Lady with the Lamp" making rounds of wounded soldiers at night.

Questions:

1. Who was Florence Nightingale?
2. When and where was she born?
3. What does the passage convey?
4. When did she pass away?
5. Where did she establish nursing school?

PART- B **10 Marks**

Instruction: Answer any one of the questions in 150 words.

2. How do you introduce yourself formally in an interview?
3. Describe your polytechnic.

BOARD DIPLOMA EXAMINATION (C-18)

THIRD SEMESTER 18 COMMON-310P

COMMUNICATION SKILLS AND LIFE SKILLS

MID SEM - II

Time : 1 Hour **Total Marks: 20 Marks**

Part – A **10 marks**

Instruction: Answer any one of the following questions in 150 words.

1. Describe how you have spent your summer vacation.

2. What are the features of good JAM presentation? What precautions do you before speaking for one minute on the given topic?

Part – B **10 marks**

Instruction: Answer any one of the following questions in 150 words.

3. What is positive attitude? Give examples of positive attitude from your life.

4. Mention your long term goal with SMART features. How do you achieve it?

BOARD DIPLOMA EXAMINATION (C-18)
THIRD SEMESTER 18 COMMON-310P
COMMUNICATION SKILLS AND LIFE SKILLS
SEMESTER END EXAM

Time : 3 Hours **Total Marks: 40 Marks**

Part – A **10 marks**

1. Listen to the following passage and answer the questions give below it**. 5 X 2 = 10**
(Teacher should give the questions before reading the passage)

Answer the following questions after teacher reads the following paragraph.

Prof. Jayashankar was born to Mahalaxmi and Laxmi Kantha Rao on 6th August 1934 in Akkampet village, Warangal District. He was a Doctorate in Economics. He worked as a Vice-Chancellor of Kakatiya University. He worked in many capacities. He was popularly known as "Pedda Sir." He inspired many a people to fight for the cause of Telangana Statehood.

At the age of twelve, Jayashankar refused to sing songs in praise of the Nizam and insisted on singing Vande Mataram instead. As an intermediate student, in 1952, he protested against State Reorganization Committee plan to merge with the Andhra Rashtra. He took an active part in the agitations of "Non – Mulki go back" and " Idli Sambar go back." He took an active part in Telangana separate statehood agitation in 1969 too. In 1999, Prof. Jayashankar started the Telangana Development Forum in the USA which helped to propagate the injustice, discrimination and exploitation meted out to Telangana region and people in the aspects of employment, funds and water resources. He relentlessly put his efforts to end the struggle of Telangana people. He passed away on June 21, 2011. He was 76 years old at the time of his death.

Questions:

1. Where was Prof. Jayashankar born?
2. Why didn't he sing songs in praise of the Nizam?
3. Why did Jayashankar start the Telangana Development Forum in USA?
4. What are the two agitations in which he took an active part?
5. What is the meaning of 'relentlessly'?

Part – B **15 marks**

2. JAM / Role Plays

Part – C **15 marks**

3. Viva Voce on Life Skills topics

III SEM RUBRICS

1. Each student should visit the Lab to know the materials used for mechanical operations
2. Each student should visit nearby workshops and industries to know the machine operations like lathe, drilling, milling, grinding etc.
3. Each student will do the report on types of operations can performed on machines.
4. Identify and prepare a list of materials used in the Different industrial applications.
5. Each student should visit library to refer to manual/Journals of Packaging related to packaging materials and components.
6. Each student should visit the Lab to know the materials used for packaging.
7. Each student will do the report on Types Different Packages available in the market
8. Prepare any one type of package carrying different food products in market.
9. Identify and prepare a list of materials used in the Different types of packaging applications.
10. Each student should visit library to refer to manual/Journals of Packaging related to ancillary packaging materials and components.
11. Each student should visit the Lab to know the ancillary materials used for packaging.
12. Each student will do the report on Types Different Packages available in the market
13. Prepare any one type of package carrying different food products in market.
14. Identify and prepare a list of ancillary materials used in the Different types of packaging applications.
15. Quiz and Group discussion
16. Surprise test
17. Swatch bharath in the campus
18. Yoga and meditation classes