# CURRICULUM – 2018

# (C-18)

# DIPLOMA IN CIVIL ENGINEERING




STATE BOARD OF TECHNICAL EDUCATION & TRAINING

TELANGANA, HYDERABAD

# III SEMESTER

## TEACHING AND EXAMINATION SCHEDULE

## III SEMESTER

| S.NO | Course Code | Course Name | Teaching Scheme | | | | Credits | Examination Scheme | | | | | | |
|---|---|---|---|---|---|---|---|---|---|---|---|---|---|---|
| | | | Instruction periods per week | | | Total periods /semester | | Continuous Internal Evaluation | | | Semester End Examination | | | |
| | | | L | T | P | | | Mid Sem 1 | Mid Sem 2 | Internal Evaluation | Max Marks | Min Marks | Total Marks | Min Marks for passing including internal |
| 1 | 18C-301F | Applied Engineering Mathematics | 3 | 1 | - | 60 | 3 | 20 | 20 | 20 | 40 | 14 | 100 | 35 |
| 2 | 18C-302C | Engineering Mechanics | 3 | 1 | - | 60 | 3 | 20 | 20 | 20 | 40 | 14 | 100 | 35 |
| 3 | 18C 303C | Building Materials and Construction Practice | 3 | 1 | - | 60 | 3 | 20 | 20 | 20 | 40 | 14 | 100 | 35 |
| 4 | 18C-304C | Advanced Surveying | 3 | 1 | - | 60 | 3 | 20 | 20 | 20 | 40 | 14 | 100 | 35 |
| 5 | 18C-305C | Transportation Engineering | 3 | 1 | - | 60 | 3 | 20 | 20 | 20 | 40 | 14 | 100 | 35 |
| 6 | 18C-306P | Building Drawing | 1 | 0 | 2 | 45 | 1.5 | 20 | 20 | 20 | 40 | 20 | 100 | 50 |
| 7 | 18C-307P | Material Testing Lab | 1 | 0 | 2 | 45 | 1.5 | 20 | 20 | 20 | 40 | 20 | 100 | 50 |
| 8 | 18C-308P | Advanced Surveying Lab | 1 | 0 | 2 | 45 | 1.5 | 20 | 20 | 20 | 40 | 20 | 100 | 50 |
| 9 | 18C-309P | Civil Engg CAD Lab | 1 | 0 | 2 | 45 | 1.5 | 20 | 20 | 20 | 40 | 20 | 100 | 50 |
| 10 | 18C-310P | Communications and Life Skills Lab Practice | 1 | 0 | 2 | 45 | 1.5 | 20 | 20 | 20 | 40 | 20 | 100 | 50 |
| | | Skill Upgradation | 0 | 0 | 7 | 105 | 2.5 | 0 | 0 | Rubrics | | -- | - | 0 |
| | | | 20 | 5 | 17 | 630 | 25 | 200 | 200 | 200 | 400 | 170 | 1000 | 425 |

# APPLIED ENGINEERING MATHEMATICS

| | |
|---|---|
| Course Title **: APPLIED ENGINEERING MATHEMATICS** | Course Code **: 18C-301F** |
| SEMESTER : **III** | Course Group **: Foundation** |
| Teaching Scheme ( L : T : P ) : **36 :24 : 0 (** in Periods ) | Credits : **3 Credits** |
| Type of Course : **Lecture + Assignments** | Total Contact Periods : **60** |
| CIE : 6**0 Marks** | SEE : **40 Marks** |
| Programmes : **Common to all Engineering Diploma Programmes** | |

**Pre requisites**

This course requires the knowledge of Basic Engg. Mathematics and Engg. Mathematics at Diploma 1st and 2nd Semester level.

**Course Outcomes: COs**

At the end of the course, the student will have the ability to:

| | |
|---|---|
| CO 1 | Integrate different kinds of functions |
| CO 2 | Integrate functions using different methods |
| CO 3 | Find the values of definite integrals. |
| CO 4 | Solve simple problems of Areas, Volumes. |
| CO 5 | Find the Mean and RMS values of various functions and Approximate values of Definite integrals using Trapezoidal and Simpson's 1/3rd rule |
| CO 6 | Form the Differential Equation and Solve Simple DEs of 1st order and 1stdegree. |

**Course Content:**

**Unit-I** **Duration: 10 Periods (L: 6.0 – T:4.0)**

**Indefinite Integration-I**

Integration regarded as anti-derivative – Indefinite integral of standard functions. Properties of indefinite integral. Integration by substitution or change of variable. Integrals of the form $\sin^m\theta . \cos^n\theta$. where m and n are positive integers. Integrals of tan x, cot x, sec x, cosec x and powers of tan x, sec x by substitution.

Evaluation of integrals which are reducible to the following forms:

$i)\ \frac{1}{a^2+x^2}, \frac{1}{a^2-x^2}, \frac{1}{x^2-a^2}$

$ii)\ \frac{1}{\sqrt{a^2+x^2}}, \frac{1}{\sqrt{a^2-x^2}}, \frac{1}{\sqrt{x^2-a^2}}$

$iii)\ \sqrt{x^2+a^2}, \sqrt{a^2-x^2}, \sqrt{x^2-a^2}$

**Unit – II** **Duration: 08 Periods (L: 4.8 – T:3.2)**

**Indefinite Integration-II**

Integration by decomposition of the integrand into simple rational algebraic functions. Integration by parts, Bernoulli's rule.

**Unit-III** **Duration: 06 Periods (L: 3.6 – T:2.4)**

**Definite Integral and its Properties:**

Definite integral-fundamental theorem of integral calculus, properties of definite integrals, evaluation of simple definite integrals. Definite integral as the limit of a sum.

**Unit – IV** **Duration: 10 Periods (L: 6.0 – T:4.0)**

**Applications of Definite Integrals:**

Areas under plane curves – Sign of the Area – Area enclosed between two curves. Solid of revolution – Volumes of solids of revolution.

**Unit – V** **Duration: 08 Periods (L: 4.8 – T:3.2)**

**Mean, RMS values and Numerical Integration:**

Mean values and Root Mean Square values of a function on a given interval.

Trapezoidal rule, Simpson's 1/3 rule to evaluate an approximate value of a definite integral.

**Unit – VI** **Duration: 18 Periods (L: 10.8 – T:7.2)**

**Differential Equations of First Order:**

Definition of a differential equation – order and degree of a differential equation – formation of differential equations – solution of differential equation of first order, first degree : variables -separable, homogeneous, exact, linear differential equation, Bernoulli's equation.

**Reference Books:**

1. Integral Calculus Vol.I, by M.Pillai and Shanti Narayan
2. Thomas' Calculus, Pearson Addison –Wesley Publishers

**Suggested E-Learning references**

1. www.freebookcentre.net/mathematics/introductory-mathematics-books.html

2.E-books:www.mathebook.net

**Suggested Learning Outcomes**

**Unit-I**

**1.0 Use Indefinite Integration to solve engineering problems**

1.1 Explain the concept of Indefinite integral as an anti-derivative.

1.2 State the indefinite integral of standard functions and properties of Integrals $\int (u + v)\, dx$ And $\int ku\, dx$ where k is constant and $u, v$ are functions of $x$.

1.3 Solve integration problems involving standard functions using the above rules.

1.4 Evaluate integrals involving simple functions of the following type by the method of substitution.

i) $\int f(ax + b)\, dx$ *where* $f(x)\, dx$ is in standard form.

ii) $\int [f(x)]^n f'(x)\, dx$

iii) $\int f'(x)/[f(x)]\, dx$

iv) $\int f\{g(x)\} g'(x)\, dx$

1.5 Find the Integrals of *tan x, cot x, sec x* and *cosec x using*the above.

1.6 Evaluate the integrals of the form $\int Sin^m\theta Cos^n\theta.\, d\theta$ where m and n are positive integers.

1.7 Evaluate integrals of powers of *tan x* and *sec x*.

1.8 Evaluate the Standard Integrals of the functions of the type

$$i)\ \frac{1}{a^2+x^2}, \frac{1}{a^2-x^2}, \frac{1}{x^2-a^2}$$

$$ii)\ \frac{1}{\sqrt{a^2+x^2}}, \frac{1}{\sqrt{a^2-x^2}}, \frac{1}{\sqrt{x^2-a^2}}$$

$$iii)\ \sqrt{x^2+a^2}, \sqrt{a^2-x^2}, \sqrt{x^2-a^2}$$

1.9 Evaluate the integrals of the type

$$\int \frac{1}{a \pm bSin\theta} d\theta, \int \frac{1}{a \pm b\cos\theta} d\theta \text{ and } \int \frac{1}{a\cos\theta \pm b\sin\theta \pm c} d\theta$$ .

**Unit-II**

**2.0 Use Indefinite Integration to solve engineering problems**

2.1 Evaluate integrals using decomposition method.

2.2 Evaluate integrals using integration by parts with examples.

2.3 State the Bernoulli's rule for evaluating the integrals of the form $\int u.vdx$.

2.4 Evaluate the integrals of the form $\int e^x [f(x) + f'(x)]\, dx$.

**Unit-III**

**3.0 Understand definite integral and use it in engineering applications**

3.1 State the fundamental theorem of integral calculus

3.2 Explain the concept of definite integral.

3.3 Calculate the definite integral over an interval.

3.4 State various properties of definite integrals.

3.5 Evaluate simple problems on definite integrals using the above properties.

3.6 Explain definite integral as a limit of sum by considering an area.

**Unit –IV**

**4.0 Understand definite integral and use it in engineering applications**

4.1 Find the Areas under plane curves and area enclosed between two curves using integration.

4.2 Obtain the Volumes of solids of revolution.

**Unit –V**

**5.0 Understand Mean, RMS values and Numerical Methods**

5.1 Obtain the Mean value and Root Mean Square (RMS) value of the functions in any given Interval.

5.2 Explain the Trapezoidal rule, Simpson's 1/3 rules for approximation of definite integrals and provide some examples.

**Unit –VI**

**6.0 Solve Differential Equations in engineering problems.**

6.1 Define a Differential equation, its order and degree

6.2 Form a differential equation by eliminating arbitrary constants.

6.3 Solve the first order first degree differential equations by the following methods:

i. Variables Separable.

ii. Homogeneous Equations.

iii. Exact Differential Equations

iv. Linear differential equation of the form $dy/dx + Py = Q$,
where P and Q are functions of x or constants.

v. Bernoulli's Equation (Reducible to linear form.)

6.4 Solve simple problems leading to engineering applications by using above methods.

**Suggested Student Activities**

1. Student visits Library to refer Standard Books on Mathematics and collect related material

2.Quiz

3.Group discussion

4.Surprise tests

5. Seminars

6. Home Assignments

**CO / PO - MAPPING**

| CO | PO1 | PO2 | PO3 | PO4 | PO5 | PO6 | PO7 | PO8 | PO9 | PO10 | Mapped POs |
|---|---|---|---|---|---|---|---|---|---|---|---|
| CO1 | 3 | 2 | 2 | 1 | | | 1 | | | 3 | 1,2,3,4,7,10 |
| CO2 | 3 | 2 | 2 | 1 | | | 1 | | | 3 | 1,2,3,4,7,10 |
| CO3 | 3 | 2 | 2 | 1 | | | 1 | | | 3 | 1,2,3,4,7,10 |
| CO4 | 3 | 2 | 2 | 1 | | | 1 | | | 3 | 1,2,3,4,7,10 |
| CO5 | 3 | 2 | 2 | 1 | | | 1 | | | 3 | 1,2,3,4,7,10 |
| CO6 | 3 | 2 | 2 | 1 | | | 1 | | | 3 | 1,2,3,4,7,10 |

## MID SEM-I EXAM

| S.No | Unit Name | R | U | A | Remarks |
|---|---|---|---|---|---|
| 1 | Unit-I | 1, 2 | 5(a)<br>5(b) | 7(a)<br>7(b) | |
| 2 | Unit-II | 3, 4 | 6(a)<br>6(b) | 8(a)<br>8(b) | |
| Total Questions | | 4 | 4 | 4 | |

## MID SEM –II EXAM

| S.No | Unit Name | R | U | A | Remarks |
|---|---|---|---|---|---|
| 1 | Unit-III | 1, 2 | 5(a)<br>5(b) | 7(a)<br>7(b) | |
| 2 | Unit-IV | 3, 4 | 6(a)<br>6(b) | 8(a)<br>8(b) | |
| Total Questions | | 4 | 4 | 4 | |

## Semester End Examination

| Sl No | Unit No. | Questions to be set for SEE | | | | Remarks |
|---|---|---|---|---|---|---|
| | | R | | U | A | |
| 1 | I | 4 | 1 | 9(a) | 13(a) | |
| 2 | II | | | | | |
| 3 | III | | 2 | 10(a) | 14(a) | |
| 4 | IV | | | | | |
| 5 | V | | 3 (5, 6) | 9(b)<br>11(a)<br>11(b) | 13(b)<br>15(a)<br>15(b) | |
| 6 | VI | | 3 (7,8) | 10(b)<br>12(a)<br>12(b) | 14(b)<br>16(a)<br>16(b) | |
| Total Questions | | 8 | | 8 | 8 | |

| Legend: | Remembering (R) | 1 Mark |
|---|---|---|
| | Understanding (U) | 3 Marks |
| | Application (A) | 5 Marks |

Code: C18-Common-301F

STATE BOARD OF TECHNICAL EDUCATION & TRAINING, TELANGANA
BOARD DIPLOMA EXAMINATIONS
MID SEM –I, MODEL PAPER, III SEMESTER
APPLIED ENGINEERING MATHEMATICS

TIME: 1: 00 Hours Max. Marks: 20

## PART-A

Instructions: 1. Answer **ALL** questions 04 X 01 = 04

2 Each question carries **ONE** mark

1. Integrate: $e^x - \sin x + x^4$
2. Find : $\int \frac{dx}{5x+7}$ dx
3. Write Bernoulli's rule of integration
4. Find : $\int x \log x \, dx$

## PART-B

Instructions: 1. Answer any **TWO** questions 02 X 03 = 06

2. Each question carries **THREE** marks

5 a). Evaluate : $\int \frac{x^5}{1+x^{12}} dx$ .

Or

5 b) Evaluate : $\int \frac{dx}{(x^2+25)}$

6 a). Evaluate : $\int x \sin x dx$

Or

6 b).Evaluate : $\int \frac{3x+2}{(x-1)(2x+3)} dx$.

## PART C

Instructions: 1. Answer any **Two** questions 02 X 05 = 10

2. Each question carries **FIVE** marks

7 a). Evaluate $\int \sqrt{x^2 + 2x + 5}$ dx

Or

7 b) Evaluate : $\int cosx\, cos2x dx$ .

8 a). Find $\int xTan^{-1}x dx$ .

Or

8 b) Find $\int x^4 Cos2x dx$ .

@@@

Code: C18-Common-301F

STATE BOARD OF TECHNICAL EDUCATION & TRAINING, TELANGANA

BOARD DIPLOMA EXAMINATIONS

MID SEM –II, MODEL PAPER, III SEMESTER

APPLIED ENGINEERING MATHEMATICS

TIME: 1: 00 Hours Max. Marks: 20

## PART-A

Instructions: 1. Answer **ALL** questions 04 X 01 = 04

2 Each question carries **ONE** mark

1. Integrate : $\int_0^1 (x^4 + 1)\, dx$
2. Evaluate : $\int_0^{\pi} Sin3x dx$
3. Evaluate : $\int_0^1 \frac{1}{1+x^2} dx$
4. Write the formula to find area bounded by the curve y= f(x) , x-axis, between the limits x=a and x =b

## PART-B

Instructions: 1. Answer any **TWO** questions 02 X 03 = 06

2. Each question carries **THREE** marks

Find the Mean value of the function y = logx on [ 1 , e ]

5 a) Evaluate: $\int_0^{\frac{\pi}{2}} \sqrt{1 - Sin2x} dx$

Or

5 b) Evaluate : $\int_0^{\frac{\pi}{2}} sin^2 x dx$

6 a). Find the area bounded by the line 2x + y =8, x-axis and the lines x = 2 and x = 4.

Or

6 b). Find the Volume of the Solid generated by revolving the part of the Circle $x^2 + y^2 = 36$ From x = 0 to x = 4 about x – axis.

## PART C

Instructions: 1. Answer any **Two** questions 02 X 05 = 10

2. Each question carries **FIVE** marks

7 a). Evaluate: $\int_0^{\frac{\pi}{2}} \frac{\sqrt{Sinx}}{\sqrt{Sinx}+\sqrt{Cosx}} dx$

Or

7 b). Evaluate : $\int_0^{\frac{\pi}{2}} \log sin\, x dx$

8 a) Find the area enclosed between the Parabolas $y = 3x - x^2 and y = x^2 - x$.

Or

8 b). Find the Volume of the Solid generated by the revolution of the area bounded by the Ellipse $\frac{x^2}{25} + \frac{y^2}{16} = 1$ , about x- axis.

@@@

**C18-common**
**SUB.CODE:301F**

# BOARD DIPLOMA EXAMINATION,(C-18)

## MODEL PAPER

## III SEMESTER EXAMINATION

## APPLIED ENGINEERING MATHEMATICS

Time: 2 hours [Total Marks: 40]

---

## PART-A

Instructions: 1. Answer **ALL** questions 08 X 01 = 08

2 Each question carries **ONE** mark

1. Integrate: $x^7 - 3/x$

2. Evaluate: $\int_0^1 (x^2 + 1)$ dx

3. Write the formula to find mean value of y = f(x), in the interval (a, b)

4. Find the Order and Degree of the Differential Equation $x\frac{dy}{dx} = \sqrt{1 + \left(\frac{dy}{dx}\right)^2}$ .

5 Write Trapezoidal Rule to find the approximate value of $\int_a^b f(x)dx$.

6. Write the formula to find RMS value of y = f(x) over the range x=a and x = b.

7. Solve: $\frac{dy}{dx} = e^{2x+y}$

8. Write the condition for exactness of the differential equation M(x,y)dx + N(x,y)dy =0

## PART-B

Instructions: 1. Answer any **FOUR** questions 04 X 03 = 12

2. Each question carries **THREE** marks

9 a). Evaluate: $\int_0^{\frac{\pi}{2}} \sqrt{1 - Sin2x}dx$

Or

9 b) Find the approximate value of $\int_0^6 \frac{dx}{1+x}$ by taking n = 6 using Trapezoidal rule.

10 a) Find the area bounded by the Parabola $y = x^2 - 2x + 1$ and x-axis.

Or

10 b) Form the Differential Equation from $y = Ae^x + Be^{3x}$ where A, B are arbitrary

Constants.

11 a) Find the RMS value of $\sqrt{\log x}$ over the range x= 1 and x= e

Or

11 b) Calculate approximate value of $\int_0^4 \frac{dx}{1+x}$ by taking n= 4 using Simpson's 1/3 rule

12 a) Solve: $x\frac{dy}{dx} + 2y = logx$ .

Or

12 b) Solve: $x(1-y^2)dx + y(1-x^2)dy = 0$

## PART C

Instructions: 1. Answer any **FOUR** questions 04 X 05 = 20

2. Each question carries **FIVE** marks

13 a) Evaluate: $\int \frac{1}{x^2+2x+2}$ dx

Or

13 b) Find the RMS value of y = $\sqrt{8-4x^2}$ between x = 0 and x = 2

14 a) Find the volume of solid generated by revolving the Ellipse $\frac{x^2}{a^2} + \frac{y^2}{b^2} = 1$ about Major axis

Or

14 b) Solve: $\frac{dy}{dx} = Sin(x+y)$

15 a) A curve is drawn to passing through the points given by the following table:

| x | 1 | 1.5 | 2 | 2.5 | 3 | 3.5 | 4 |
|---|---|---|---|---|---|---|---|
| y | 3 | 3.4 | 3.7 | 3.8 | 2.7 | 2.6 | 2.1 |

Calculate the approximate area bounded by the curve , x-axis and the lines x= 1 and x= 4 using Simpson's 1/3 rule

Or

15 b) Evaluate: $\int_0^1 \sqrt{(1-x^2)}dx$ approximately by taking n = 4 using Simpson's 1/3 rd Rule.

16 a) Solve : $(y^2 - xy)dx = x^2dy$ .

Or

16 b) . Solve: $\frac{dy}{dx} + yCosx = y^3$Sin2x.

@@@

## III SEMESTER

## SKILL UPGRADATION IN - APPLIED ENGINEERING MATHEMATICS

**ACTIVITY ASSESSMENT Steps**

1. **Mathematical concepts**
2. **Procedure**
3. **Explanation**
4. **Working with others**
5. **Mathematical errors**

## ACTIVITIES

1 .Write a short notes on different types of integrals.

2. Prepare a notes on different methods to evaluate integrals.

3. List out Properties of definite integrals.

4. List out and explain various applications of definite integrals.

5. Explain the procedure to solve problems on Areas using integration

6. Explain the procedure to find volumes of irregular shapes of solids of revolution using integration.

7. Prepare a presentation to find Mean values and R.M.S values of any given function.

8. Explain the procedure to calculate approximate area by using Trapezoidal rule.

9. Explain the procedure to calculate approximate area by Simpson's 1/3 rule

10. Prepare a presentation on solving $1^{st}$ order differential equations using any suitable method.

**CO / PO - MAPPING OF ACTIVITIES**

| CO | PO1 | PO2 | PO3 | PO4 | PO5 | PO6 | PO7 | PO8 | PO9 | PO10 |
|---|---|---|---|---|---|---|---|---|---|---|
| CO1 | 3 | 2 | 2 | 1 | | | 1 | 2 | 2 | 3 |
| CO2 | 3 | 2 | 2 | 1 | | | 1 | 2 | 2 | 3 |
| CO3 | 3 | 2 | 2 | 1 | | | 1 | 2 | 2 | 3 |
| CO4 | 3 | 2 | 2 | 1 | | | 1 | 2 | 2 | 3 |
| CO5 | 3 | 2 | 2 | 1 | | | 1 | 2 | 2 | 3 |
| CO6 | 3 | 2 | 2 | 1 | | | 1 | 2 | 2 | 3 |
| CO7 | 3 | 2 | 2 | 1 | | | 1 | 2 | 2 | 3 |

| | | | | | | | | | | |
|---|---|---|---|---|---|---|---|---|---|---|
| CO8 | 3 | 2 | 2 | 1 | | | 1 | 2 | 2 | 3 |
| CO9 | 3 | 2 | 2 | 1 | | | 1 | 2 | 2 | 3 |
| CO10 | 3 | 2 | 2 | 1 | | | 1 | 2 | 2 | 3 |

## Rubrics for Activity assessment

| CATEGORY | **4** | **3** | **2** | **1** |
|---|---|---|---|---|
| **Mathematical Concepts** | Explanation shows complete understanding of the mathematical concepts used to solve the problem(s). | Explanation shows substantial understanding of the mathematical concepts used to solve the problem(s). | Explanation shows some understanding of the mathematical concepts needed to solve the problem(s). | Explanation shows very limited understanding of the underlying concepts needed to solve the problem(s) OR is not written. |
| **Procedures** | Typically, uses an efficient and effective procedure to solve the problem(s). | Typically, uses an effective procedure to solve the problem(s). | Sometimes uses an effective procedure to solve problems, but does not do it consistently. | Rarely uses an effective procedure to solve problems. |
| **Explanation** | Explanation is detailed and clear. | Explanation is clear. | Explanation is a little difficult to understand, but includes critical components. | Explanation is difficult to understand and is missing several components OR was not included. |
| **Working with Others** | Student was an engaged partner, listening to suggestions of others and working cooperatively throughout lesson. | Student was an engaged partner but had trouble listening to others and/or working cooperatively. | Student cooperated with others, but needed prompting to stay on-task. | Student did not work effectively with others. |
| **Mathematical Errors** | 90-100% of the steps and solutions have no mathematical errors. | Almost all (85-89%) of the steps and solutions have no mathematical errors. | Most (75-84%) of the steps and solutions have no mathematical errors. | More than 75% of the steps and solutions have mathematical errors. |

**Engineering Mechanics**

| | | | |
|---|---|---|---|
| Course Title | **Engineering Mechanics** | Course Code | **18C-302C** |
| Semester | **III Semester** | Course Group | **Core** |
| Teaching Scheme in Periods(L:T:P) | **45:15:0** | Credits | **3** |
| Methodology | **Lecture + Assignments** | Total Contact Periods | **60 Periods** |
| CIE | **60 Marks** | SEE | **40 Marks** |

**Pre requisites**

Knowledge of Fundamentals of Engineering Physics.

**Upon completion of the course, the student shall be able to**

**Course Outcomes**

| | |
|---|---|
| CO1 | Evaluate resultant force, its importance and calculation |
| CO2 | Illustrate the concept of centroids for various shapes and its calculation |
| CO3 | Calculate Moment of Inertia of standard sections. |
| CO4 | Explain Simple stresses and strains and its effect on simple sections and composite sections. |

**Course Contents**

**UNIT - 1: Principles of Mechanics and Force system Duration: 10 Periods (L: 7.5 – T:2.5)**

Mechanics – Engineering Mechanics – Applications and branches of Engineering Mechanics – Statics, Dynamics, Kinetics and Kinematics – Systems of measurements and Units – S.I and M.K.S units of physical quantities used in Civil Engineering- Definition of force – vectors and scalars – systems of forces – co-planar forces - Resultant of forces at a point – Parallelogram Law and Triangle Law of forces – Lami's theorem – Polygon law of forces – Resolution of forces - Parallel forces – like and unlike – moment of force –couple- Conditions of equilibrium of a rigid body subjected to a number of co-planar forces - Structural members supporting co-planar forces

**UNIT - 2: Beams and Supports Duration: 10 Periods (L: 7.5 – T:2.5)**

Types of supports – Simple support, fixed support, hinged support, roller support

Types of beams –simply supported beams, cantilever, fixed beams, overhanging beams, continuous beams

Types of loading -point load, uniformly distributed load, Calculation of Reactions

**UNIT - 3: Centroid** **Duration: 10 Periods(L: 7.5 – T:2.5)**

Definitions – Centroid, Centre of gravity - Position of Centroid of standard figures like rectangle, triangle, circle, semi-circle, parallelogram and trapezium - Determination of location of Centroid of standard steel sections – T, L, I, Channel section, Z section and unsymmetrical I section - built up sections and plane figures having hollow portion.

**UNIT - 4: Moment of Inertia** **Duration: 10 Periods(L: 7.5 – T:2.5)**

Definition of Moment of Inertia - Perpendicular and parallel axes theorems - Moment of Inertia of standard sections like rectangle, triangle, circle and hallow circular sections - Moment of Inertia – T, L, I, Channel section,Z sections and unsymmetrical I section using parallel axis theorem - Moment of Inertia and radius of gyration of built-up sections - Polar Moment of Inertia of solid and hollow circular sections using Perpendicular axis theorem

**UNIT - 5: Simple Stresses and Strains** **Duration: 12Periods (L: 9.0 – T:3.0)**

Stress and strain – type of stresses and strains - Stress strain curves for ductile materials (like mild steel)–Hooke's law – Young's modulus – deformation under axial load - Shear stress and Shear Strain – Modulus of rigidity - Longitudinal and lateral strain – Poisson's ratio, Bulk Modulus – relationship between elastic constants (proof not required, only problems).

**UNIT - 6: Composite sections and Mechanical properties**

**Duration: 08Periods (L: 6.0 – T:2.0)**

Composite sections – effect of axial loads - Temperature stresses and strains – hoop stress – Temperature stresses in composite sections - Mechanical properties of materials

**Reference Books**


1. Engineering Mechanics – N.H. Dubey (Tata Mc Graw Hill)
2. Engineering Mechanics – R.S.Khurmi
3. Engineering Mechanics – P.K. Abdul Latheef
4. Engineering Mechanics& Statics – Dayaratnam
5. Engineering Mechanics – N. Srinivasulu
6. Engineering Mechanics – S.S. Bavikatti
7. Engineering Mechanics – A.K. Tayal

**Suggested E-learning references**

1.www.elearning.com/survey
2. http://nptel.ac.in

**Suggested Learning Outcomes**

**Upon completion of the course, the student shall be able to**

1.1 Define Mechanics and Engineering Mechanics

1.2 State the applications of Engineering Mechanics

1.3 State the branches of Engineering Mechanics

1.4 Define the terms 1. Statics 2. Dynamics 3. Kinetics 4. Kinematics

1.5 State the systems of measurements and Units

1.6 State S.I and M.K.S units of physical quantities used in Civil Engineering

1.7 Define the following terms

a) Force

b) Moment

c) Resultant

d) Equilibrium of forces

e) Equilibrant

f) Moment of a couple

1.8 Distinguish between

1.8.1 Scalar and Vector quantities

1.8.2 Co-planar and Non co-planar forces

1.8.3 Parallel and non-parallel forces

1.8.4 Like and unlike parallel forces

1.9 Compute the resultant of two co-planar forces acting at a point by

1.9.1 Law of parallelogram of forces

1.9.2 Triangle law of forces

1.10 Explain and Solve simple problems using Lami's Theorem

1.11 Solve problems on computation of the resultant of a system of coplanar concurrent forces by

1.11.1 Law of polygon of forces

1.11.2 Resolution of forces

1.12 Solve problems on computation of the resultant of a system of coplanar parallel forces.

1.13 Explain the properties of a couple.

1.14 State the conditions of equilibrium of rigid body subjected to a number of co- planar forces.

1.15 Determine resultant of co-planar concurrent forces by analytical methods.

2.1 List and describe various types of supports (Simple support, fixed support, hinged support, roller support)

2.2 List and sketch various types of beams (simply supported beams, cantilever, fixed beams, overhanging beams, continuous beams)

2.3 List various types of loading (point load, uniformly distributed load, uniformly varying load

2.4 To determine support reactions for cantilever, simply supported and overhanging beams with point loads and uniformly distributed loads

3.1 Define Centroid and Centre of gravity.

3.2 Distinguish between Centroid and Centre of gravity.

3.3 State the need for finding the Centroid and Centre of gravity for various engineering applications.

3.4 Calculate the positions of Centroid for simple plane figures from first principles.

3.5 Explain the method of determining the Centroid by 'Method of moments.

3.6 Determine the position of Centroid of standard sections-T, L, I, Channel section, Z section, unsymmetrical I section.

3.7 Determine the position of Centroid of built up sections consisting of RSJs, flange plates and Plane figures having hollow portions

4.1 Define Moment of Inertia (MI), Polar Moment of Inertia, Radius of gyration.

4.2 State the necessity of finding Moment of Inertia for various engineering applications.

4.3 Determine Moment of Inertia and Radius of gyration for regular geometrical sections like T, L, I, Channel section, Z section, unsymmetrical I section.

4.4 State 1. Parallel axes theorem 2. Perpendicular axes theorem to determine MI.

4.5 Determine MI of standard sections by applying Parallel axes theorem.

4.6 Determine MI of built-up sections by applying Parallel axes theorem.

4.7 Calculate radius of gyration of standard sections.

4.8 Determine the polar M.I for solid and hollow circular section applying Perpendicular axes theorem.

5.1 Define the following terms

a) Stress
b) Strain
c) Modulus of Elasticity
d) Longitudinal Strain
e) Lateral Strain
f) Poisson's ratio
g) Modulus of rigidity
h) Bulk Modulus
i) Factor of safety
j) Resilience
k) Strain Energy
l) Proof resilience
m) Modulus of Resilience

5.2 Distinguish between different kinds of stresses and strains.

5.3 Draw the stress-strain curve for ductile materials (Mild steel) and explain the salient points in the curve.

5.4 State Hooke's law and limit of proportionality.

5.5 Solve problems on relationship between simple stress and simple strain under axial loading on uniform bars and stepped bars.

5.6 State the relationship among the elastic constants.

5.7 Solve problems on relationship between elastic constants.

6.1 Calculate stresses in simple and composite members under axial loading.

6.2 Explain and calculate temperature stress, strain, hoop stress, temperature stresses in composite sections.

6.3 Explain the mechanical properties of materials

6.4 Elasticity, plasticity, ductility, brittleness, malleability, stiffness, hardness, toughness, creep, fatigue – examples of materials which exhibit the above properties.

**Suggested Student Activities**

1. Prepare a program in MS Excel to find centre of gravity; $I_{ZZ}$ and $I_{YY}$ of I, L,T and channel sections.

2. Prepare a report on calculation of tensile stress induced in the rope made with any material
3. Demonstrate the stresses developed in composite sections using AUTO CAD

**CO-PO Mapping Matrix**

| | Basic knowledge | Discipline Knowledge | Experiments and practice | Engineering Tools | Engineer and society | Environment & sustainability | Ethics | Individual and Team work | Communication | Lifelong learning | Linked PO |
|---|---|---|---|---|---|---|---|---|---|---|---|
| CO | PO 1 | PO 2 | PO 3 | PO 4 | PO 5 | PO 6 | PO 7 | PO 8 | PO 9 | PO 10 | |
| CO1 | 3 | 1 | 1 | 2 | | | | 1 | | | 1,2,3,4,8 |
| CO2 | 1 | 2 | 1 | 1 | | 1 | | 1 | | | 1,2,3,4,6,8 |
| CO3 | 1 | 3 | 2 | 1 | | | | | | | 1,2,3,4 |
| CO4 | 3 | 3 | 1 | 1 | | 1 | | | | 1 | 1,2,3,4,6,10 |

**Internal Evaluation**

| Test | Units | Marks |
|---|---|---|
| Mid Sem 1 | 1 and 2 | 20 |
| Mid Sem 2 | 3 and 4 | 20 |
| Slip Test 1 | 1 and 2 | 5 |
| Slip Test 2 | 3 and 4 | 5 |
| Assignments | | 5 |
| Seminars | | 5 |
| | Total | 60 |

**Course Content and Blue Print of Marks for SEE**

<table>
<tr><th rowspan="2">Unit No</th><th rowspan="2">Unit Name</th><th rowspan="2">Periods</th><th colspan="4">Questions to be set for SEE</th></tr>
<tr><th colspan="3">R</th><th>U</th><th>A</th></tr>
<tr><td>I</td><td>Principles of Mechanics and Force system</td><td>10</td><td rowspan="6">Q4</td><td colspan="2" rowspan="2">Q1</td><td rowspan="2">Q9A</td><td rowspan="2">Q13A</td></tr>
<tr><td>II</td><td>Beams and Supports</td><td>10</td></tr>
<tr><td>III</td><td>Centroid</td><td>10</td><td colspan="2" rowspan="2">Q2</td><td rowspan="2">Q10A</td><td rowspan="2">Q14A</td></tr>
<tr><td>IV</td><td>Moment of Inertia</td><td>10</td></tr>
<tr><td>V</td><td>Simple Stresses and Strains</td><td>12</td><td rowspan="2">Q3</td><td>Q5,Q6</td><td>Q9(b),Q11(a), Q11(b)</td><td>Q13(b),Q15(a), Q15(b)</td></tr>
<tr><td>VI</td><td>Composite sections and Mechanical properties</td><td>08</td><td>Q7,Q8</td><td>Q10(b),Q12(a), Q12(b)</td><td>Q14(b),Q16(a), Q16(b)</td></tr>
<tr><td colspan="2">Total</td><td>60</td><td colspan="3">8</td><td>8</td><td>8</td></tr>
</table>

## QUESTION PAPER PATTERN FOR MID SEMESTER EXAMS

| Sl.No | Description | Level | No of Questions | Marks for each question | Choice | Total Marks |
|---|---|---|---|---|---|---|
| 01 | Part-A | Remembering(R) | 4 | 1 | Nil | 4 Marks |
| 02 | Part-B | Understanding(U) | 4 | 3 | 2 | 6 Marks |
| 03 | Part-C | Application(A) | 4 | 5 | 2 | 10 Marks |
| Total Marks | | | | | | 20 Marks |

**MID SEM-I EXAM**

| S.No | Unit No | R | U | A | Remarks |
|---|---|---|---|---|---|
| 1 | Unit-I | 1,2 | 5(a) | 7(a) | |
| | | | 5(b) | 7(b) | |
| 2 | Unit-II | 3,4 | 6(a) | 8(a) | |
| | | | 6(b) | 8(b) | |
| Total Questions | | 4 | 4 | 4 | |

**MID SEM-II EXAM**

| S.No | Unit No | R | U | A | Remarks |
|---|---|---|---|---|---|
| 1 | Unit-III | 1,2 | 5(a) | 7(a) | |
| | | | 5(b) | 7(b) | |
| 2 | Unit-IV | 3,4 | 6(a) | 8(a) | |
| | | | 6(b) | 8(b) | |
| Total Questions | | 4 | 4 | 4 | |

**The length of answer for each question framed in respect of Part-A, B&C shall not exceed ¼ of a page,1 page and 2 pages respectively**

## QUESTION PAPER PATTERN FOR SEMESTER END EXAM

| Sl.No | Description | Level | No of Questions | Marks for each question | Choice | Total Marks |
|---|---|---|---|---|---|---|
| 01 | Part-A | Remembering(R) | 8 | 1 | Nil | 8 Marks |
| 02 | Part-B | Understanding(U) | 8 | 3 | 4 | 12 Marks |
| 03 | Part-C | Application(A) | 8 | 5 | 4 | 20 Marks |
| Total Marks | | | | | | 40 Marks |

| Unit No | Questions to be set for SEE | | | | |
|---|---|---|---|---|---|
| | R | | | U | A |
| I | Q4 | Q1 | | Q9(a) | Q13(a) |
| II | | | | | |
| III | | Q2 | | Q10(a) | Q14(a) |
| IV | | | | | |
| V | | Q3 | Q5,Q6 | Q9(b), Q11(a), Q11(b) | Q13(b), Q15(a), Q15(b) |
| VI | | | Q7,Q8 | Q10(b), Q12(a), Q12(b) | Q14(b), Q16(a), Q16(b) |
| Total Questions | 8 | | | 8 | 8 |

**State Board of Technical Education and Training, Telangana**

**Model Question paper**

**DCE III Semester**

**Mid Semester-I Examination**

**Corse Code: 18C-302C** **Duration: 1 Hour**

**Course Name: Engineering Mechanics** **Max.Marks: 20 Marks**

---

## PART-A

Answer **all** questions, Each Question carries *one* mark **4x1 = 4 Marks**

1) Define Engineering Mechanics
2) State "Parallelogram law of forces".
3) Draw the sketch of a) overhanging beam b) Cantilever beam
4) List types of loads.

## PART-B

Answer **two** questions. Each question carries *three* marks **2x 3 = 6 Marks**

5) a) Write any three applications of Engineering Mechanics

(OR)

b) Two forces acting at angle of 120°. The bigger force is 80N and Resultant is perpendicular to smaller one. Find the magnitude of the smaller force

6) a) Draw the sketch of a cantilever beam of 4m length with a central point load of 9kN and udl of 5kN/m over the left half portion.

(OR)

b) List the types of loads to which a beam can be subjected and show with a neat sketch.

## PART-C

Answer **two** questions. Each question carries *five* marks **2x5 = 10Marks**

7) a) A string 2m long is tied to the ends of a uniform rod that weighs 60N and is 1.6m long. The string passes over a nail, so that the rod hangs horizontally. Calculate the tension in the string.

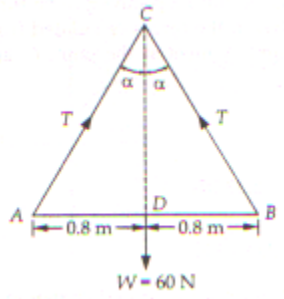


(OR)

b) Determine the resultant, both in magnitude and direction, of the four forces acting on the body as shown in the fig. given below

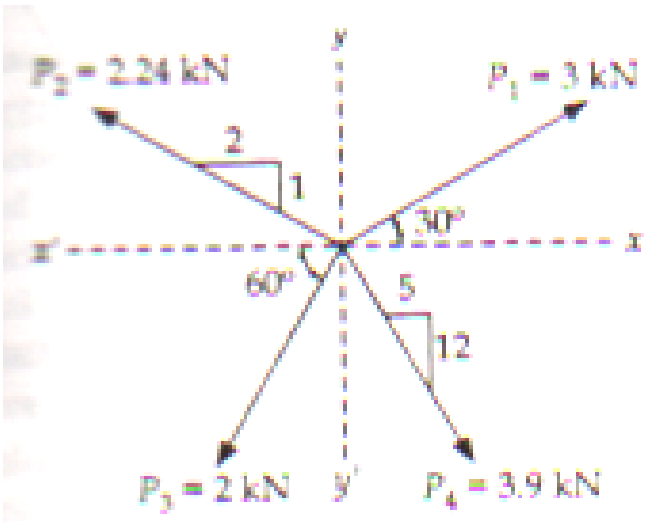


8) a) A cantilever 1.75m length is subjected to two point loads of 2kN and 3kN at 0.75m and 1.5m from the free end. It also carries a udl of 3kN/m over a length of 1 m from free end. Draw a neat sketch of the beam and Calculate Support reactions of the beam.

(OR)

b) Draw the neat sketch and Determine the support reactions of a beam of 9m length simply supported at the right end and at 6m from the right end. It carries a udl of 5kN/m over a length of 6m from right end and a concentrated load of 10kN at 1m from left end.

**State Board of Technical Education and Training, Telangana**
**Model Question paper**
**DCE III Semester**
**Mid Semester-II Examination**

**Corse Code: 18C-302C** **Duration: 1 Hour**
**Course Name: Engineering Mechanics** **Max.Marks: 20 Marks**

---

## PART-A

Answer **all** questions, Each Question carries one mark. **4x1 = 4 Marks**

1) Locate the centroid of T-section as shown in fig. below.

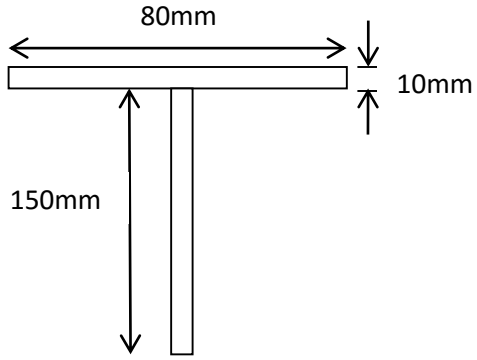


2) Give the position of centroid of a semi-circular section
3) Define Moment of Inertia
4) State perpendicular axis theorem.

## PART-B

Answer **two** questions. Each question carries *three* marks **2x 3 = 6 Marks**

5) a) Find the Centroid of an inverted T-section with flange 60mm x 10mm and web 50mm x 10mm.

(OR)

b) Differentiate between the Centroid and Centre of gravity

6) a) The moment of inertia of rectangular section beam about x-x and y-y axes passing through the centroid are250 x $10^6$ $mm^4$ and 40 x$10^6$ $mm^4$ respectively. Calculate the size of the section.

(OR)

b) Find the radius of gyration of hollow circular plate of 60mm inner diameter and 100 mm outer diameter.

## PART-C

Answer **two** questions. Each question carries *five* marks **2x5 = 10Marks**

7) a) A uniform lamina is shown in fig. Determine the centroid of the lamina. All dimensions are in mm.

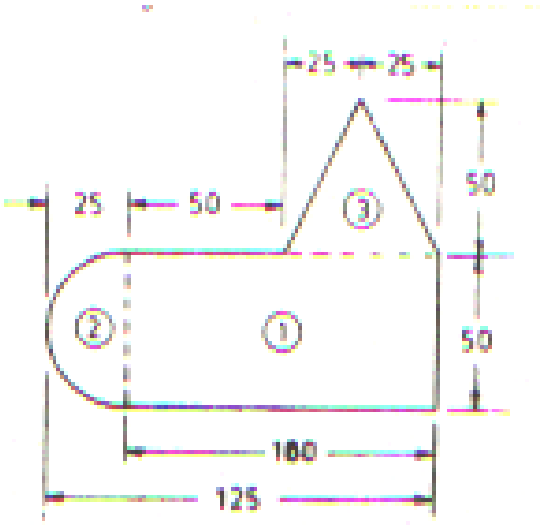


(OR)

b) A semi- circular area is removed from a trapezium as shown in fig. Determine the centroid of the remaining area

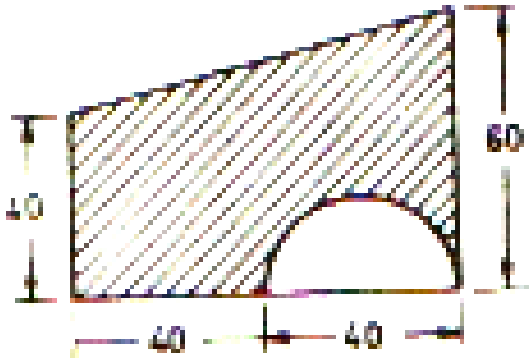


8(a) A section is built- up of two 225mm x 85mm channels placed back to back at a distance of x mm apart as shown in Fig. which are connected by battens. Determine the value of x so that $I_{xx}$ of built up section is equal to $I_{yy}$ of built –up section. Given the properties of each channel section as below: A= 3301 $mm^2$ ; $C_{yy}$=23mm; $I_{xx}$=2694.6 x $10^4$ $mm^4$; $I_{yy}$= 187.2 x $10^4$ $mm^4$

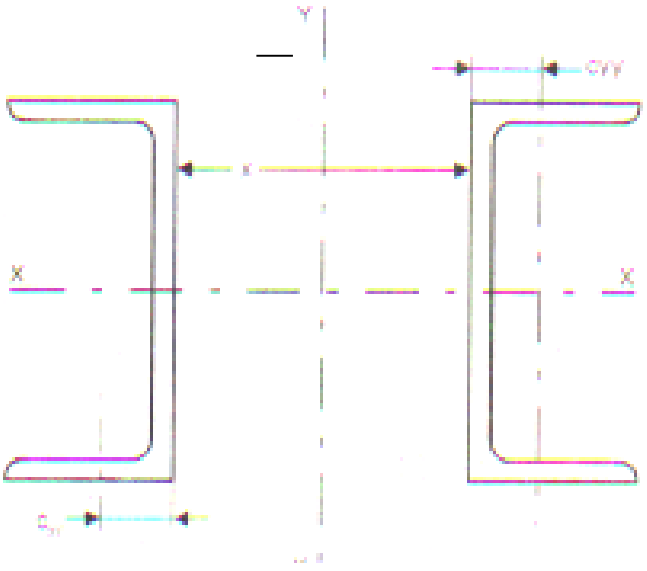


(OR)

b) Find the moment of inertia of the section about AB as shown in Fig. Take diameter of the hole as 30 mm.

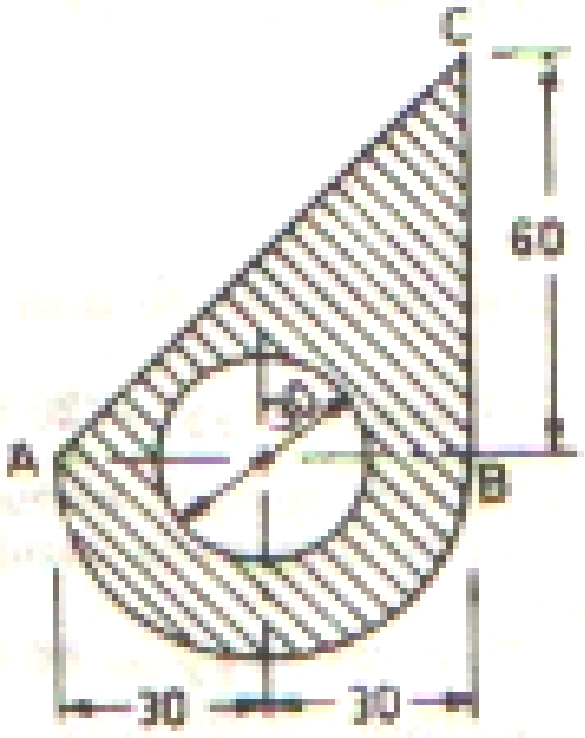

**State Board of Technical Education and Training, Telangana**
**Model Question paper**
**DCE III Semester**
**Semester End Examination**

**Corse Code: 18C-302C** **Duration: 2 Hours**

**Course Name: Engineering Mechanics** **Maximum .Marks: 40**

**Marks**

---

## PART-A

Answer **all** questions. Each question carries **one** mark. **8x1 = 8 Marks**

1) State the classification of Engineering Mechanics
2) Define "Radius of gyration"
3) State "Hooke's law"
4) State "Lami's Theorem".
5) Define "Stress"
6) Define "Strain Energy"
7) List the Elastic Constants.
8) Define the term "Fatigue"

## PART-B

Answer **four** questions. Each question carries **three** marks. **4x3= 12 Marks**

9)
   a) State any three characteristics of couple.
   (OR)
   b) A steel bar 5 meters long and 25mm in diameter is stretched by 2.0mm by a load of 80kN in pulling it axially. Determine the modulus of elasticity of the bar.

10)
   a) The M.I of a triangle about its base is $1526.5 \times 10^4$ $mm^4$, width of base is 120mm. Find the height of the triangle
   (OR)
   b) Define i) Ductility ii) Brittleness

11)
   a) Define the terms
      i. Linear strain
      ii. Lateral strain
   (OR)
   b) A material has Young's modulus of $1.25 \times 10^5$ $N/mm^2$ and Poisson's ratio of 0.25. Calculate the modulus of rigidity and bulk modulus

12)
   a) Define i) Toughness ii) Malleability

(OR)

b) Define i) Ductility ii) Brittleness

## PART-C

Answer **four** questions. Each question carries **five** marks **4x 5=20 Marks**

13)

a) Calculate the tensile force in the cables AB and BC as shown in fig. The pulleys are frictionless.

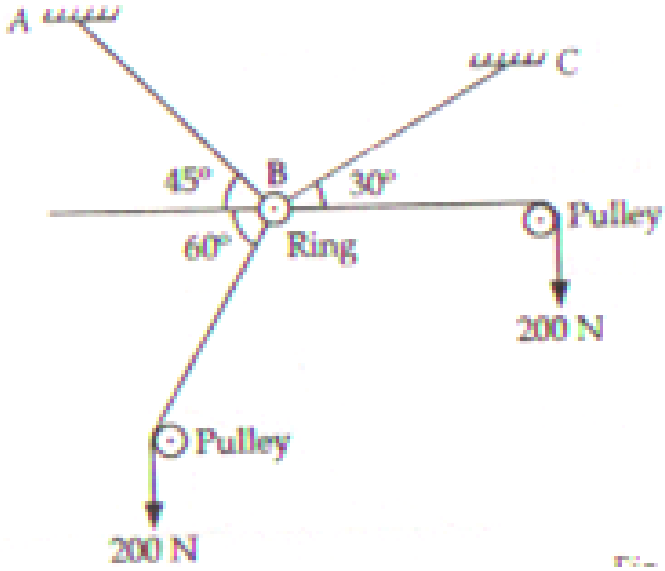


(OR)

b) A tensile test is carried out on a steel bar of 10 mm diameter over a gauge length of 50mm. The bar yields at a load 22 kN, reaches a maximum load of 43 kN and breaks at 27 kN. The diameter of ruptured neck is 7.5mm and final gauge length is 64mm. Determine

(a) Yield strength

(b) Ultimate strength

( c) Percentage reduction in area and

(d) percentage elongation.

14)

a) A mild steel R.S. Joist 200mm x 140mm with one 200mm x 10 mm plate symmetrically riveted to each flange is used as a stanchion. Find $I_{xx,}$ $I_{yy}$ and least radius of gyration for the compound section. Properties of R.S. Joist are,

Area of section = 3670 $mm^2$; $I_{xx}$= 2624.5 x $10^4$ $mm^4$; $I_{yy}$=329 x $10^4$ $mm^4$

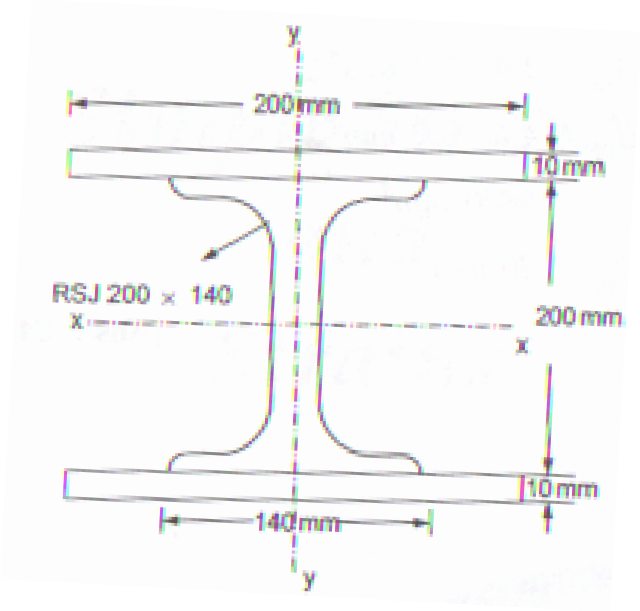


(OR)

b) An R.C. C column has square cross-section 400mm x 400mm. If it is reinforced with six steel bars each of 20 mm diameter. The column carries an axial compressive load of 630 kN. Determine stress in each material. Modular ratio is 15.

15)

a) A cylindrical bar is 25mm dia of 1.2m long. During a tensile test it is found that the linear strain is 4 times the lateral strain. Calculate the shear and bulk modulus if the bar is elongated 0.06mm under axial tensile load of 50kN.

(OR)

b) A steel bar 1.6 long is acted upon by forces as shown in fig. below. Find the elongation of the bar. Given E=200GPa.

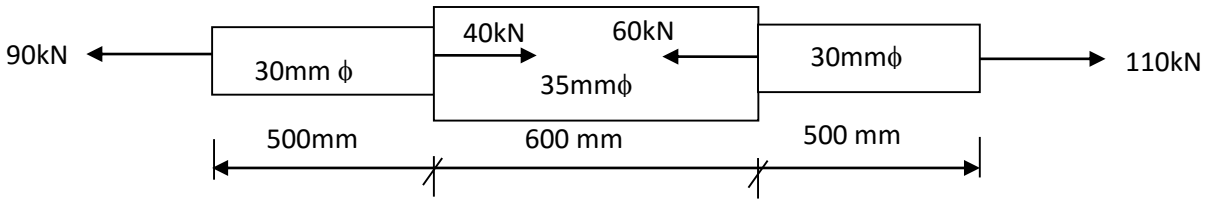


16)

a) Following are the details of a composite member formed by enclosing a copper rod in a steel tube:

Dia. of copper rod = 36mm

Internal dia. of steel tube = 40mm

External dia. of steel tube = 50mm

E for steel = 200 GPa, E for copper = 110 GPa ,$\alpha$ for steel 12 x $10^{-6}$ per $^0$C; $\alpha$for copper =16 x $10^{-6}$ Per $^0$C. Calculate the stress developed in each material if the combination is heated through

30°C.

(OR)

b) A copper rod 80mm in diameter is co-axially enclosed in a copper tube of internal dia. 90mm and external dia. 110mm, both of same length 480mm. The combination carries total axial thrust F. If the stress in the copper rod is 12 MPa compressive, find

(a) The stress in the tube (b) The value of F

**Building Materials & Construction Practice**

| | | | |
|---|---|---|---|
| Course Title: | **Building Materials & Construction Practice** | Course Code : | **18C-303C** |
| Semester: | **III Semester** | Course Group : | **Core** |
| Teaching Scheme in Periods(L:T:P): | **45:15:0** | Credits : | **3** |
| Methodology : | **Lecture + Assignments** | Total Contact Periods : | **60 Periods** |
| CIE : | **60 Marks** | SEE : | **40 Marks** |

**Course Outcomes**

Upon completion of the course, the student shall be able to

| | |
|---|---|
| CO1 | Explain the origin, types and uses of various building materials (Stones, bricks tiles and sand) and methods of testing of building materials as per standard procedures |
| CO2 | State and explain method of using different types of cement, cement mortar and cement concrete after testing their quality by standard procedures |
| CO3 | Comprehend timber and surface protective finishes and propose different market forms for appropriate field application |
| CO4 | Classify Buildings as per NBC, select suitable type of foundation and method of constructing masonry as per standards |
| CO5 | Propose a suitable Door, window, lintel, for a particular opening, identify suitable scaffolding for doing a particular work and select a suitable staircase |
| CO6 | Select a suitable roof and flooring, explain their method of construction and provide suitable protective and decorative finishes |

**Course Contents**

**UNIT-1: Stones, Bricks, tiles and sand Duration:10Periods (L: 7.5 – T:2.5)**

a) Classification of rocks, physical classification.

b) Characteristics of good building stone.

c) Common varieties of stones-granite, marble, Kadapa slab, Shahabad stones.

d) Dressing of stones – purpose.

e) Manufacture of bricks-Steps only

f) ISI specification for bricks IS-1077-1971(sizes).

g) Characteristics of good bricks.

h) Testing of bricks as per IS-3495-1966 – tests on water absorption and compressive strength of bricks.

i) Tiles –Types of tiles- roofing tiles (Mangalore tiles), floor tiles, Ceramic tiles, Vitrified tiles, Morbonite.

j) Characteristics of good tiles.

k) Characteristics of good sand,

l) Functions of sand.

m) Bulking of sand

**UNIT-2: Cement, Cement mortar and Concrete Duration: 10 Periods (L: 7.5 – T:2.5)**

a) Chemical composition of cement.

b) Method of manufacture of cement – Dry process(Flow chart only).

c) Classification of cement – ordinary Portland cement, quick setting cement, white cement – Rapid hardening cement, Low heat cement, High alumina cement, Blast furnace slag cement and Pozzolana cement – uses of different types of cement.

d) Tests for cement as per ISI – fineness, consistency, setting time, soundness tests.

e) Define Fine aggregate and course aggregate

f) Mortar – List Classification of mortar –Cement mortar, Surkhi Mortar, Blended mortar.

g) Different proportions of mortars for various works.

h) Preparation of cement mortar.

i) Ingredients of plain concrete.

j) Proportioning – usual proportions for different items of work -C.C.bed, Footings, Columns, Slabs & Beams for ordinary buildings.

k) Plain concrete and reinforced concrete.

l) Water cement ratio – factors effecting water cement ratio.

m) Workability – Slump test on fresh concrete, hardened concrete – compressive strength test on hardened concrete.

n) Admixtures –only definition – types – 1) Chemical admixtures – Plasticizers (water reducers), super plasticizers, air entraining agents, accelerators and retarders 2) Mineral admixtures – Pozzolanas -fly ash, blast furnace slag, silica fume and rice husk.

o) Method of preparation of concrete – Hand and machine mixing.

p) Procedure of mixing, conveyance, placing, compaction and curing of concrete.

q) Curing – methods – suitability

r) Introduction to ready mix concrete – Advantages and disadvantages.

s) Use of fly ash, robo sand.

**UNIT 3: Timber and Surface Protective Materials Duration:8 Periods(L:6 – T:2)**

a) Characteristics of good timber.

b) Seasoning of timber – Importance.

c) Common varieties of timber used for different items of work – Doors and windows, form work, centring with particular references of Telangana.

d) Composition of Paints, enamels, varnishes.

e) Types and uses of surface protective materials like Paints, Enamels, Varnishes, Distempers, Emulsion, French polish and Wax Polish.

**UNIT 4: Classification of Buildings ,foundations and types of masonry**

**Duration:12 Periods (L: 9 – T:3)**

a) Component parts of a building –Their functions.

b) Classification of buildings according to National building code.

c) Site investigation for foundation as per N.B.C, Trial pit, auger boring.

d) Bearing capacity of soils –safe and ultimate bearing capacity.

e) Spread footing for columns and walls

f) Raft foundation.

g) Pile foundation and uses.

h) Different loads to be considered for the design of foundation as per IS 875 – 1987.

i) Spread foundation – Depth of foundation by Rankine's formula– width of foundation – Thickness of concrete bed.

j) Construction of foundation – spread footing only.

k) Causes,effects and prevention of dampness at basement level.

l) Classification of stone masonry –Random rubble and Coursed Rubble Masonry – general principles to be observed while constructing stone masonry

m) Brick Masonry – Bonds in brick masonry – (English bond only) for one brick thick wall – General principles to be observed in construction of brick masonry.

**UNIT 5: Doors, Windows, Lintels, scaffolding and staircases**

**Duration: 10 Periods(L:7.5 – T:2.5)**

a) Doors and windows – parts of door window – positioning.

b) Common types of doors-panelled, Glazed and Flush doors.

c) Special types of doors – Flush doors with modern construction materials, revolving doors, collapsible doors, rolling shutters, sliding doors

d) Windows – Panelled and Glazed.

e) Ventilators – fixed, swinging type and louvered.

f) Lintels – Functions

g) Scaffolding – Purpose and types – tubular scaffolding only.

h) Location of stairs.

i) Types of stairs – straight, Quarter turn, half turn, Dog legged, open well, bifurcated, spiral, helical stair cases(only line diagrams)

**UNIT 6: Roofs ,Floorings ,protective and decorative finishes**

**Duration:10 Periods(L:7.5 – T:2.5)**

a) Roof – functions of roofs.

b) Classification of roofs – flat roofs – pitched roofs.

c) Different types of trusses – classification based on material and shape- King post truss, Queen post truss.

d) Weather proof course on R.C.C. roof-importance.

e) Types of flooring -Requirements of a good floor.

f) Methods of constructing flooring – Cement Concrete flooring, Cement Plaster flooring, Tiled flooring.

g) Plastering – purpose – Types of plastering – procedure for plastering. external finishing – sand faced, pebble dash, acoustic plastering and marble chips.

h) Pointing – purpose –Types of pointing

i) Painting – objects – method of painting new and old wall surfaces

j) White washing – colour washing – Distempering – internal and external walls.

**Reference Books**


1. Engineering Materials by S C Rangwala
2. Building materials by Kulakarni
3. Construction materials by N.Sreenivasulu
4. Building Materials by Duggal S. K.
5. Building Material & Construction by S.P. Arora& S. P. Bindra
6. Construction Technology by Sarkar Oxford University Press
7. Building materials & components by C B R I
8. National Building code by N.B.C
9. Building Construction by Sushil Kumar
10. Building Construction by S.C.Rangawala
11. SP20 Explanatory handbook on Masonry code


**Suggested E-learning references**

1. http://nptel.ac.in
2. https://www.youtube.com/watch?v=nMIl3krK-GI
3. https://www.youtube.com/watch?v=6OAHO9zgeXM
4. https://www.youtube.com/watch?v=j1bL_1NBvIc
5. https://www.youtube.com/watch?v=cQGDP8kWEMM
6. https://www.youtube.com/watch?v=rh1Z-i14-h0
7. https://www.youtube.com/watch?v=veF4uSUtrEY
8. https://www.youtube.com/watch?v=USat6LdENzU
9. https://www.nicee.org/EQTips.php

**Suggested Learning Outcomes**

**After completion of the course, the student shall be able to**

1.1 State the classification of rocks – Physical classification only.

1.2 State the characteristics of good building stone.

1.3 State the common varieties of stone used in different items of construction and their suitability for construction works – Granite, marble, Kadapa slabs, Shahabad stones.

1.4 Explain the purpose of dressing stones.

1.5 List the steps involved in the manufacture of bricks.

1.6 Common sizes of bricks – IS specifications.

1.7 State the characteristics of good bricks.

1.8 State the standard tests for bricks

1.9 Explain water absorption test and compressive strength test on bricks.

1.10 State the common variety of tiles used for different purposes.

1.11 State the characteristics of good tiles.

1.12 State the characteristics of good sand.

1.13 State the functions of building sand.

1.14 Explain the importance of bulking of sand..

2.1 State the chemical composition of cement.

2.2 State the steps in the manufacture of cement by dry process using flowchart.

2.3 State the classification of cements and their uses.

2.4 State and explain tests on cement for fineness, consistency, setting times and soundness of cement.

2.5 State grades of cement and their compressive strengths.

2.6 Understand the terms fine aggregate and coarse aggregate.

2.7 State the types of mortars.

2.8 State the different proportions of mortars for various works.

2.9 Explain the method of preparation of cement mortar

2.10 State the ingredients of plain and reinforced concrete.

2.11 State the usual proportions of plain and reinforced concrete for different items of work.

2.12 Define and explain the importance of Hydration of cement and water cement ratio

2.13 State the steps involved in the procedure of mixing, conveyance, placing, compaction and curing of concrete.

2.14 State the need of curing and list the methods of curing suitable for different purposes

2.15 Define workability and explain the method of conducting Slump test and Compressive strength test

2.16 State the definition and types of admixtures in concrete.

2.17 Explain ready mix concrete and state the advantages and disadvantages.

2.18 State the uses of Fly ash and Robo sand

3.1 State the characteristics of good timber.

3.2 State the importance of seasoning of timber.

3.3 Name the common varieties of timber used in Telangana for various Civil Engineering works.

3.4 State various types of wood products used in construction work.

3.5 State the composition of Paints, enamels, varnishes.

3.6 Explain the types and uses of surface protective materials like Paints, Enamels, Varnishes, Distempers, Emulsion, French polish and Wax Polish.

4.1 State the components of a building and their functions.

4.2 State the classification of buildings according to National Building Code(NBC) with examples.

4.3 Explain the investigations required for foundation as per N.B.C.

4.4 Explain the terms Bearing capacity of soil, Safe bearing capacity of soil and Ultimate bearing capacity of soil.

4.5 Describe with sketches – spread footings, raft and pile foundation.

4.6 State the loads to be considered in design of foundation.

4.7 State the rules for minimum depth, width of foundation and thickness of concrete bed for spread footing.

4.8 Explain the method of constructing spread footing

4.9 List the causes and effects of dampness at basement level and state the measures for prevention of dampness at basement level.

4.10 List different types of stone masonry.

4.11 Explain different types of stone masonry.

4.12 State the general principles to be observed in stone masonry construction

4.13 Explain the terms Bond, Course, Header and Stretcher related to brick masonry.

4.14 State the general principles to be observed in brick masonry construction.

4.15 Explain with sketches English bond of brick masonry for one brick thick wall.

5.1 State the principles of locating doors, windows and ventilators in buildings.

5.2 Explain with sketches common and special types of doors, windows and ventilators.

5.3 List the uses of different types of doors, windows and ventilators.

5.4 Explain the functions of lintels.

5.5 State the purpose of scaffolding.

5.6 Define scaffolding and mention the types.

5.7 List the component parts of tubular scaffolding.

5.8 Sketch and explain about tubular scaffolding.

5.9 State the principles of locating stairs.

5.10 Explain terms: rise, tread, landing, flight, going, hand rail, newal post, baluster and balustrade.

5.11 Draw the line diagrams of different stairs.

6.1 State the functions of roofs.

6.2 State the classification of roofs.

6.3 State the classification of trusses based on material and shape.

6.4 Explain with sketches king post truss and queen post truss.

6.5 State the importance of providing a weather proof course on R.C.C roof

6.6 State the types and functions of flooring.

6.7 State the requirements of good floor.

6.8 Explain method of construction of C.C flooring, cement plaster and tiled flooring

6.9 State the objects of plastering.

6.10 State the methods of plastering.

6.11 State the steps in providing cement plastering on masonry walls.

6.12 State the objects and types of pointing.

6.13 State the objects of painting.

6.14 Explain the method of painting new and old wall surfaces.

6.15 Explain briefly the method of white washing, colour washing, distempering the brick masonry wall.

**Suggested Student Activities**

1. Identify different types of construction materials available in market and study their properties
2. Collect and study different photographs of various foundations and prepare a report.
3. Collect and study different photographs of stairs.
4. Collect and study the different types of Damp Proofing materials and prepare a report.
5. Prepare models of various types of foundations.
6. Prepare models of different types of roof trusses.
7. Visit any nearby material testing laboratory and prepare a report on various tests conducted on building materials.
8. Prepare a report on prefabricated construction.
9. Prepare a report on the use of modern construction equipment in construction.
10. Tech fest/Srujana
11. Paper/Poster presentation
12. Quiz
13. Group discussion
14. Surprise Test

**CO-PO Mapping Matrix**

| | Basic knowledge | Discipline Knowledge | Experiments and practice | Engineering Tools | Engineer and society | Environment & sustainability | Ethics | Individual and Team work | Communication | Lifelong learning | Linked PO |
|---|---|---|---|---|---|---|---|---|---|---|---|
| CO | PO 1 | PO 2 | PO 3 | PO 4 | PO 5 | PO 6 | PO 7 | PO 8 | PO 9 | PO 10 | |
| CO1 | | 1 | 1 | 1 | | 1 | | 2 | 1 | 2 | 2,3,4,6,8,9,10 |
| CO2 | | 1 | 2 | | 2 | | | 1 | 1 | 2 | 2.3,5,8,9,10 |
| CO3 | | 1 | | | 2 | 2 | | | | 1 | 2,5,6,10 |
| CO4 | | 2 | 2 | 2 | 2 | | 1 | | | 2 | 2,3,4,5,7,10 |
| CO5 | | 3 | 2 | 2 | 2 | | | 2 | | 2 | 2,3,4,5,8,10 |
| CO6 | | 3 | 2 | 2 | | 1 | | | | 2 | 2,3,4,6,10 |

**Internal Evaluation**

| Test | Units | Marks |
|---|---|---|
| Mid Sem 1 | 1 and 2 | 20 |
| Mid Sem 2 | 3 and 4 | 20 |
| Slip Test 1 | 1 and 2 | 5 |
| Slip Test 2 | 3 and 4 | 5 |
| Assignments | | 5 |
| Seminars | | 5 |
| | Total | 60 |

**Course Content and Blue Print of Marks for SEE**

<table>
<tr><th rowspan="2">Unit No</th><th rowspan="2">Unit Name</th><th rowspan="2">Periods</th><th colspan="4">Questions to be set for SEE</th></tr>
<tr><th colspan="2">R</th><th>U</th><th>A</th></tr>
<tr><td>1</td><td>Stones, Bricks, tiles and sand</td><td>10</td><td rowspan="6">Q4</td><td colspan="2" rowspan="2">Q1</td><td rowspan="2">Q9(a)</td><td rowspan="2">Q13(a)</td></tr>
<tr><td>2</td><td>Cement, Cement mortar and concrete</td><td>10</td></tr>
<tr><td>3</td><td>Timber and Surface protective materials</td><td>8</td><td colspan="2" rowspan="2">Q2</td><td rowspan="2">Q10(a)</td><td rowspan="2">Q14(a)</td></tr>
<tr><td>4</td><td>Classification of buildings, foundations and masonry</td><td>12</td></tr>
<tr><td>5</td><td>Doors, windows, lintels, ,scaffolding and staircases</td><td>10</td><td rowspan="2">Q3</td><td>Q5,Q6</td><td>Q9(b), Q11(a), Q11(b)</td><td>Q14(b), Q15(a), Q15(b)</td></tr>
<tr><td>6</td><td>Roofs, floorings, Protective and decorative finishes</td><td>10</td><td>Q7,Q8</td><td>Q10(b), Q12(a), Q12(b)</td><td>Q13(b), Q16(a), Q16(b)</td></tr>
<tr><td colspan="2">Total</td><td>60</td><td colspan="2">8</td><td>8</td><td>8</td></tr>
</table>

## QUESTION PAPER PATTERN FOR MID SEMESTER EXAMS

| Sl.No | Description | Level | No of Questions | Marks for each question | Choice | Total Marks |
|---|---|---|---|---|---|---|
| 01 | Part-A | Remembering(R) | 4 | 1 | Nil | 4 Marks |
| 02 | Part-B | Understanding(U) | 4 | 3 | 2 | 6 Marks |
| 03 | Part-C | Application(A) | 4 | 5 | 2 | 10 Marks |
| Total Marks | | | | | | 20 Marks |

**MID SEM-I EXAM**

| S.No | Unit No | R | U | A | Remarks |
|---|---|---|---|---|---|
| 1 | Unit-I | 1,2 | 5(a) | 7(a) | |
| | | | 5(b) | 7(b) | |
| 2 | Unit-II | 3,4 | 6(a) | 8(a) | |
| | | | 6(b) | 8(b) | |
| Total Questions | | 4 | 4 | 4 | |

**MID SEM-II EXAM**

| S.No | Unit No | R | U | A | Remarks |
|---|---|---|---|---|---|
| 1 | Unit-III | 1,2 | 5(a) | 7(a) | |
| | | | 5(b) | 7(b) | |
| 2 | Unit-IV | 3,4 | 6(a) | 8(a) | |
| | | | 6(b) | 8(b) | |
| Total Questions | | 4 | 4 | 4 | |

**The length of answer for each question framed in respect of Part-A, B&C shall not exceed ¼ of a page,1 page and 2 pages respectively**

## QUESTION PAPER PATTERN FOR SEMESTER END EXAM

| Sl.No | Description | Level | No of Questions | Marks for each question | Choice | Total Marks |
|---|---|---|---|---|---|---|
| 01 | Part-A | Remembering(R) | 8 | 1 | Nil | 8 Marks |
| 02 | Part-B | Understanding(U) | 8 | 3 | 4 | 12 Marks |
| 03 | Part-C | Application(A) | 8 | 5 | 4 | 20 Marks |
| Total Marks | | | | | | 40 Marks |

| Unit No | Questions to be set for SEE | | | | |
|---|---|---|---|---|---|
| | R | | | U | A |
| I | Q4 | Q1 | | Q9(a) | Q13(a) |
| II | | | | | |
| III | | Q2 | | Q10(a) | Q14(a) |
| IV | | | | | |
| V | | Q3 | Q5,Q6 | Q9(b), Q11(a), Q11(b) | Q13(b), Q15(a), Q15(b) |
| VI | | | Q7,Q8 | Q10(b), Q12(a), Q12(b) | Q14(b), Q16(a), Q16(b) |
| Total Questions | 8 | | | 8 | 8 |

**State Board of Technical Education and Training, Telangana**
**Model Question paper**
**DCE III semester Mid Semester-I Examination**

**Corse Code:18C-303C** **Duration:1 hour**
**Course Name: Building Materials and Construction Practice** **Max.Marks:20 Marks**

---

## PART-A

Answer **all** questions, Each Question carries one mark **4x1 = 4 Marks**

1) State physical classification of rocks and also give an example for each
2) State the standard sizes for common building bricks as per Indian Standards.
3) Mention standard values for any three properties of Ordinary Portland Cement.
4) Define 'Admixture'**.**

## PART-B

Answer **two** questions. Each question carries three marks **2x 3 = 6 Marks**

5(a) State any three properties of granite stone

(or)

5(b) Define "Bulking of Sand". State the effects of bulking of sand on proportioning of concrete.

6(a) State the usual proportions of cement mortar for the following:

(a) Internal Plastering
(b)Top finishing of cement concrete flooring
(c) Stone masonry for ordinary buildings

(or)

6(b) What is water cement ratio? Explain its significance in strength and workability of concrete.

## PART-C

Answer **two** questions. Each question carries five marks **2x 5 = 10 Marks**

7(a) State ten important characteristics of good building stones.

(or)

7(b) Explain the test to be conducted for testing compressive strength of bricks

8(a) Explain tests to be conducted on cement to determine its normal consistency

(or)

8(b) Explain the procedures involved in Hand mixing and machine mixing of cement concrete.

**State Board of Technical Education and Training,Telangana**
**Model Question paper**
**DCE III semester Mid Semester-II Examination**

**Corse Code:18C-303C** **Duration:1 hour**
**Course Name: Building Materials & Construction Practice** **Max.Marks:20 Marks**

---

## PART-A

Answer **all** questions, Each Question carries one mark **4x1= 4 Marks**

1. State ingredients of paint.
2. Define 'seasoning of timber'.
3. Define bearing capacity of soil
4. State the different types of stone masonry

## PART-B

Answer **two** questions. Each question carries three marks **2x 3 = 6 Marks**

5(a) Mention any three characteristics of good paint.

(or)

5(b) List any five varieties of timber used in Telangana for different civil engineering works and give one use of each

6(a)Explain the causes and effect of dampness at basement level

(or)

6(b)State the general principles to be observed in stone masonry construction

## PART-C

Answer **two** questions. Each question carries five marks **2x 5 = 10 Marks**

7(a) State three characteristics of good timber and mention two common defects in timber.

(or)

7(b) State five important characteristics of a good varnish

8(a) State classification of buildings with examples

(or)

8(b) Explain brick masonry with sketch in English bond of one brick wall and one and half brick wall

**State Board of Technical Education and Training, Telangana**
**Model Question paper**
**DCE III Semester**
**Semester End Examination**

**Corse Code:18C-303C** **Duration:2 hours**
**Course Name: Building Materials & Construction Practice** **Max.Marks:40 Marks**

---

## PART-A

Answer **all** questions 8**x1 =8 Marks**

1) Define 'dressing of stones'.
2) State components of building
3) List any two types of windows
4) What is meant by hydration of cement.
5) State the different types of stairs based on geometry
6) State the purpose of scaffolding.
7) State the classification of roofs
8) State different types of pointing?

## PART-B

Answer **four** questions. Each question carries three marks. **4 x 3 = 12 Marks**

9(a) Define "Bulking of Sand". State the effects of bulking of sand on proportioning of concrete.

(or)

9(b) State advantages of tubular scaffolding

10(a) State any six characteristics of good timber.

(or)

10(b) State three objects of plastering a wall

11(a) Explain the terms:

i)Rise ii) tread iii) landing

(or)

11(b) State the principles of locating doors in buildings

12(a) Draw a neat sketch of king post truss and name the parts

(or)

12(b) Define prime coat in painting? State its necessity

## PART-C

Answer **four** questions. Each question carries five marks 4 **x 5 = 20 Marks**

13(a) What is meant by water-cement ratio? Explain the ill effects of increased and decreased water-cement ratio on workability and strength of concrete

(or)

13(b) Explain paneled doors and their uses with neat sketches

14(a) State the general principles to be observed in brick masonry construction

(or)

14(b) Explain briefly the method of construction of cement concrete floor

15(a) Explain about open well stair with neat sketch.

(or)

15(b) List different types of ventilators with their uses

16(a) List the requirements of good floor.

(or)

16(b) Describe the method of application of oil bound distemper on a masonry wall

**Advanced Surveying**

| | | | |
|---|---|---|---|
| Course Title: | **Advanced Surveying** | Course Code : | **18C-304C** |
| Semester: | **III Semester** | Course Group : | **Core** |
| Teaching Scheme in Periods(L:T:P): | **45:15:0** | Credits : | **3** |
| Methodology: | **Lecture+Assignments** | Total Contact Periods : | **60 Periods** |
| CIE : | **60 Marks** | SEE : | **40 Marks** |

**Pre requisites**

Knowledge of Chain, Compass surveying and Levelling

**Course outcomes**

Upon completion of the course, the student shall be able to

| | |
|---|---|
| CO1 | Explain the basic concepts and principles of Theodolite in any civil engineering projects before planning and during execution. |
| CO2 | Explain the working principles and use of Tachometric survey in rough terrain |
| CO3 | Interpret data from Theodolite and Total Station in setting out curves. |
| CO4 | Distinguish basic concepts and principles of GPS and GIS in Surveying |
| CO5 | Apply the knowledge of Total Station in different field activities. |

**Course Contents**

**UNIT 1: Theodolite Surveying** **Duration: 12 Periods(L:9 – T:3)**

Principles of Theodolite surveying - Component parts of Theodolite – Technical terms used in Theodolite surveying - Fundamental lines and relationship between fundamental lines - Temporary adjustments- Measurement of horizontal angles by repetition and reiteration method -Measurement of vertical angles - Measurement of magnetic bearings, deflection angles, direct angles and Prolonging a straight line - Errors in Theodolite surveying - Theodolite traversing by included angle method and deflection angle method -

Checks for closed and open traverse - Traverse computations, Latitude, Departure, closing error, balancing a closed traverse by Bowditch and Transit rules only, problems on Omitted measurements (Length/Bearing/ Length and Bearing of a line are omitted) - Area of closed traverse (Independent Co-ordinates method only).

**UNIT 2: Trigonometric levelling** **Duration:8 Periods (L:6– T:2)**

Trigonometric Levelling-Principle - Necessity -Elevations and distance of objects whose base is accessible and whose base is inaccessible with instrument stations in same vertical plane and different vertical planes.

**UNIT 3: Tacheometric Surveying** **Duration: 12 Periods (L: 9.0 – T:3.0)**

Principle of tacheometry - Methods of tacheometry - Uses of tacheometry compared to a theodolite - Stadia Tacheometry with staff held vertical and line of collimation horizontal or inclined - Elevations and distances of staff stations - Determination of Tacheometric constants - Tangential Tachometry: Finding elevations- Problems.

**UNIT 4:Elements of Simple Curves** **Duration: 8 Periods (L: 6.0 – T:2.0)**

Types of curves- Advantages and application -Designation of curve-Relationship between radius and degree of curve - Simple circular curve- elements of simple curve.

**UNIT 5: Curve setting** **Duration: 10 Periods (L:7.5 – T:2.5)**

Preparation of curve table and setting out curves by chain and tape by using different types of applications - single and double theodolite methods (Rankine method) - problems.

**UNIT 6: Advanced Surveying Instruments** **Duration: 10 Periods (L:7.5 – T:2.5)**

Principle and uses of EDM, Electronic Theodolite - Geographical-Information-System(GIS): - components-Spatial and Attribute data - application of GIS in Civil Engineering - Introduction to Photogrammetric surveying- types and basic principles of Photogrammetry, - Total Station**:** Introduction-Application - Component parts -Accessories used - Features - Total station characteristics - Electronic display and data reading - Instrument Preparation, Setting and measurement (Distance, angle, Bearing etc.) - field procedure for coordinate measurement - Global Positioning System**:** Introduction - Maps - Types of maps – Various satellites used by GPS - Differential GPS – Fundamental of GPS - G.P.S receivers - Functions - Field procedure - Observation and processing -G.P.S applications in Civil Engineering.

**Reference Books**


1. Surveying I& II by B.C.Punmia
2. Surveying by S.K. Husain
3. Surveying and levelling I& II by T.P.Kanetkar

4. Surveying by S.K.Duggal
5. Surveying by R.Agor(Khanna Publishers)
6. Surveying (McGrawhill) by N.N. Basak
7. Higher Surveying by A.M.Chandra (New Age Int.)
8. Remote sensing and GIS - Basudeb Bhatta ( Oxford Publications)
9. Advanced Surveying by R Agor (Khanna Publications)

**Suggested E-learning references**

1. http://nptel.ac.in
2. E- Lessons prepared by sbtet,TS

**Suggested Learning Outcomes**

Upon completion of the course, the student shall be able to

1.1 Identify the parts and functions of a Theodolite

1.2 List the fundamental lines of a Theodolite and their relationships.

1.3 List the steps involved in carrying out temporary adjustments for taking observations

1.4 Explain measuring of horizontal and vertical Angles.

1.5 Explain the method of conducting traverse survey

1.6 Compute the latitude, departure of lines and error of closure.

1.7 Types of omitted measurements

i) Length and bearing one side. ii) Length of one side and bearing of adjacent side.

iii) Length of two adjacent sides. iv) Bearing of two adjacent sides.

1.8 Closing error and balancing the same by Bowditch and transit rules.

1.9 Calculate the area of a closed traverse by Independent co-ordinates.

2.1 Calculate the height of an object when the base of the object is accessible.

2.2 Calculate the elevation of the object when the base of the object is inaccessible and instrument stations are in same vertical plane and in different vertical planes.

3.1 Explain the methods and advantages of Tacheometry.

3.1 Explain the principle of Tacheometry.

3.1 Determination of Tacheometric constants by field measurements.

3.1 Find vertical and horizontal distance of stations by Stadia observations.

3.1 Explain the principle of Tangential Tacheometry

3.1 Simple problems in Tangential Tacheometry

4.1 State the definition and notation of a simple curve.

4.2 Compute the elements of simple curve

4.3 Difference between types of curves

4.4 Relation between degree and radius of curves

5.1 Explain the procedure for setting out a simple curve by linear methods using Chain and Tape.

5.2 Explain the procedure for setting out a simple curve by Angular Methods- Single and Double Theodolite.

5 3 Solve problems on setting out a simple curve by linear and angular methods

6.1 Understand the principles and uses of Electronic Distance Meter (EDM) and Electronic Theodolite.

6.2 Understand Concept, application and uses of GIS in Civil Engineering

6.3 Brief introduction to Photogrammetric surveying

6.4 Understand principle, uses, application, features and field procedures of Total station

6.5 Understand principle, uses, application, fundamentals and field procedures of G.P.S.

**Suggested Student Activities**

1. Setting out sewer grades.
2. Compare Horizontal angles determined by repetition and reiteration methods between same points.
3. Calculate the height of a building by vertical angle method and verify by measuring the height with a tape taking BM as Plinth.
4. Determine RL's and heights of objects like chimneys and towers and compare the results by single plane and Double plane methods.
5. Demarcate the boundary of the given land using Total station.
6. Conduct a Closed Traverse survey and find out the area enclosed.
7. Plot the Curves executed on site and compare the parameters from plotted drawings and site execution.
8. Determine the height of the elevated objects by trigonometrical levelling.
9. Transfer the centre line alignment from Ground to inside of Tunnel using Total Station and Theodolite.
10. Indicate your college name and its specifications in google maps.
11. Conduct GIS enabled study of artificial recharge structures in a given locality and submit a report .

12. Prepare a base map for water and sewage network for your town using Remote sensing and Geographic Information System

**NOTE:**

Students should select any one of the above or other topics relevant to the subject approved by the concerned faculty, individually or in a group of 3 to 5.

**CO-PO Mapping Matrix**

| | Basic knowledge | Discipline Knowledge | Experiments and practice | Engineering Tools | Engineer and society | Environment & sustainability | Ethics | Individual and Team work | Communication | Lifelong learning | Linked PO |
|---|---|---|---|---|---|---|---|---|---|---|---|
| CO | PO 1 | PO 2 | PO 3 | PO 4 | PO 5 | PO 6 | PO 7 | PO 8 | PO 9 | PO 10 | |
| CO1 | 2 | 1 | 2 | 3 | 2 | 2 | 1 | 1 | | | 1,2,3,4,5,6,7,8 |
| CO2 | 2 | 2 | 2 | 2 | | | 1 | 2 | 2 | | 1,2,3,4,7,8,9 |
| CO3 | 2 | 2 | 2 | 2 | | | 1 | 2 | 2 | | 1,2,3,4,7,8,9 |
| CO4 | | 3 | 1 | 2 | | | 1 | 2 | 2 | | 2,3,4,7,8,9 |
| CO5 | | 3 | 1 | 2 | | | 1 | 2 | | 2 | 2,3,4,7,8,10 |

**Internal Evaluation**

| Test | Units | Marks |
|---|---|---|
| Mid Sem 1 | 1 and 2 | 20 |
| Mid Sem 2 | 3 and 4 | 20 |
| Slip Test 1 | 1 and 2 | 5 |
| Slip Test 2 | 3 and 4 | 5 |
| Assignments | | 5 |
| Seminars | | 5 |
| | Total | 60 |

**Course Content and Blue Print of Marks for SEE**

<table>
<tr><th rowspan="2">Unit No</th><th rowspan="2">Unit Name</th><th rowspan="2">Periods</th><th colspan="4">Questions to be set for SEE</th></tr>
<tr><th colspan="3">R</th><th>U</th><th>A</th></tr>
<tr><td>1</td><td>Theodolite Surveying</td><td>12</td><td rowspan="6">Q4</td><td colspan="2" rowspan="2">Q1</td><td>Q9(a)</td><td>Q13(a)</td></tr>
<tr><td>2</td><td>Trigonometric Levelling</td><td>08</td></tr>
<tr><td>3</td><td>Tacheometric Surveying</td><td>12</td><td colspan="2" rowspan="2">Q2</td><td rowspan="2">Q10(a)</td><td rowspan="2">Q14(a)</td></tr>
<tr><td>4</td><td>Elements of Simple Curves</td><td>8</td></tr>
<tr><td>5</td><td>Curve Setting</td><td>10</td><td rowspan="2">Q3</td><td>Q5,Q6</td><td>Q9(b),Q11(a), Q11(b)</td><td>Q13(b),Q15(a), Q15(b)</td></tr>
<tr><td>6</td><td>Advanced surveying instruments</td><td>10</td><td>Q7,Q8</td><td>Q10(b),Q12(a) , Q12(b)</td><td>Q14(b),Q16(a), Q16(b)</td></tr>
<tr><td colspan="2">Total</td><td>60</td><td colspan="3">8</td><td>8</td><td>8</td></tr>
</table>

**QUESTION PAPER PATTERN FOR MID SEMESTER EXAMS**

| Sl.No | Description | Level | No of Questions | Marks for each question | Choice | Total Marks |
|---|---|---|---|---|---|---|
| 01 | Part-A | Remembering(R) | 4 | 1 | Nil | 4 Marks |
| 02 | Part-B | Understanding(U) | 4 | 3 | 2 | 6 Marks |
| 03 | Part-C | Application(A) | 4 | 5 | 2 | 10 Marks |
| Total Marks | | | | | | 20 Marks |

**MID SEM-I EXAM**

| S.No | Unit No | R | U | A | Remarks |
|---|---|---|---|---|---|
| 1 | Unit-I | 1,2 | 5(a) | 7(a) | |
| | | | 5(b) | 7(b) | |
| 2 | Unit-II | 3,4 | 6(a) | 8(a) | |
| | | | 6(b) | 8(b) | |
| Total Questions | | 4 | 4 | 4 | |

**MID SEM-II EXAM**

| S.No | Unit No | R | U | A | Remarks |
|---|---|---|---|---|---|
| 1 | Unit-III | 1,2 | 5(a) | 7(a) | |
| | | | 5(b) | 7(b) | |
| 2 | Unit-IV | 3,4 | 6(a) | 8(a) | |
| | | | 6(b) | 8(b) | |
| Total Questions | | 4 | 4 | 4 | |

**The length of answer for each question framed in respect of Part-A, B&C shall not exceed ¼ of a page,1 page and 2 pages respectively**

**QUESTION PAPER PATTERN FOR SEMESTER END EXAM**

| Sl.No | Description | Level | No of Questions | Marks for each question | Choice | Total Marks |
|---|---|---|---|---|---|---|
| 01 | Part-A | Remembering(R) | 8 | 1 | Nil | 8 Marks |
| 02 | Part-B | Understanding(U) | 8 | 3 | 4 | 12 Marks |
| 03 | Part-C | Application(A) | 8 | 5 | 4 | 20 Marks |
| Total Marks | | | | | | 40 Marks |

| Unit No | Questions to be set for SEE | | | | |
|---|---|---|---|---|---|
| | R | | | U | A |
| I | Q4 | Q1 | | Q9(a) | Q13(a) |
| II | | | | | |
| III | | Q2 | | Q10(a) | Q14(a) |
| IV | | | | | |
| V | | Q3 | Q5,Q6 | Q9(b), Q11(a), Q11(b) | Q13(b), Q15a), Q15(b) |
| VI | | | Q7,Q8 | Q10(b), Q12(a), Q12(b) | Q14(b), Q16(a), Q16(b) |
| Total Questions | 8 | | | 8 | 8 |

**State Board of Technical Education and Training, Telangana**
**Model Question paper**
**DCE III semester**
**Mid Semester-I Examination**

**Corse Code:18C-304C** **Duration:1 hour**

**Course Name: Advanced Surveying** **Max.Marks:20**

---

## PART-A

**Answer all questions, Each Question carries *one* mark** **4x1 = 4 Marks**

1) Define the terms Telescope normal and Telescope inverted.
2) What are the fundamental lines of a theodolite.
3) Define trigonometric leveling.
4) Mention the three cases that occur in trignometric leveling.

## PART-B

**Answer two questions. Each question carries *Three* marks** **2x3 = 6 Marks**

5(a) What are the possible sources of errors while using a theodolite.

(OR)

5(b) Write the procedure to find the deflection angles.

6(a) How can the height of a tower be determined, when its base is inaccessible?

(OR)

6(b) State three differences between ordinary leveling and trigonometric leveling?

## PART-C

**Answer two questions. Each question carries *five* marks** **2x5 = 10Marks**

7(a) The following readings were obtained in a traverse survey, where the length and bearing of the last line were not recorded.

| Line | Length(m) | Bearing |
|---|---|---|
| AB | 75.50 | 30º 24’ |
| BC | 180.50 | 110º 36’ |
| CD | 60.25 | 210º 30’ |
| DA | ? | ? |

Compute the length and bearing of line DA.

(OR)

7(b)Find the area of the closed traverse having the following data, by co-ordinate method.

| Side | Latitude | Departure |
|---|---|---|
| AB | +225.50 | +120.50 |
| BC | -245.00 | +210.00 |
| CD | -150.50 | -110.50 |
| DA | +170.00 | -220.00 |

8(a) In order to ascertain the elevation of the top (Q) of the signal on a hill, observations were made from two instrument stations P and R at a horizontal distance of 100m. apart, the stations P and R being in line with Q. The angles of elevation of Q at P and R were 28º 42’ and 18º 6’ respectively. The staff readings upon the benchmark of elevation 287.28m. were respectively 2.870 and 3.750 when the instrument was a P and at R, the telescope being horizontal. Determine the elevation of the foot of the signal if the height of the signal above its base is 3m.

(OR)

8(b) A theodolite was set up at A and the angle of elevation to the top of tree was 8°-36’. The horizontal distance between the vertical axis of theodolite and projected position of the top of the tree was 200m. Determine the RL of the top of the tree if the RL of the instrument axis was 1609.89

**State Board of Technical Education and Training, Telangana**
**Model Question paper**
**DCE III semester**
**Mid Semester-II Examination**

**Corse Code:18C-304C** **Duration:1 hour**

**Course Name: Advanced Surveying** **Max.Marks:20 Marks**

---

## PART-A

**Answer all questions, Each Question carries *one* mark** **4x1 = 4 Marks**

1) Write the principle of tacheometry.
2) What is the difference between Theodolite and Tacheometer.
3) List the different types of curves.
4) What is a relation between the radius and degree of curve.

## PART-B

**Answer two questions. Each question carries *Three* marks** **2x3 = 6 Marks**

5(a) Describe the method of determining the constants of a Tacheometer from field measurements

(OR)

5(b) What are the sources of errors in Tacheometry. What are the permissible errors.

6(a) Draw a neat sketch of simple circular curve and indicate it's all notations.

(OR)

6(b) Define i) forward tangent ii) point of tangency.

## PART-C

**Answer two questions. Each question carries *five* marks** **2x5 = 10Marks**

7(a) The following readings were observed on a staff vertically held.

| Instrument Station | Staff Station | Vertical Angle | Hair readings (m) | Remarks |
|---|---|---|---|---|
| C | BM | -5º 20' | 1.500, 1.800, 2.450 | RL of BM is 750.50m |
| C | D | +8º 12' | 0.750, 1.500, 2.250 | |

Calculate the horizontal distance CD and RL of D, when the constants of instruments are 100 and 0.15.

(or)

7(b) The following readings were observed with a Transit Theodolite

| Instrument Station | Staff Station | Target | Vertical Angle | Staff Reading | Remarks |
|---|---|---|---|---|---|
| O | A | Lower | +4º 30’ | 0.950 | RL of the instrument axis is 255.50m |
| | | Upper | +6º 30’ | 3.250 | |

Calculate the horizontal distance between the instrument station and staff, and also the RL of staff station A.

8) a) Derive a relationship between a radius and degree of a curve.

(or)

b) What are different types of curves and write its suitable areas of application

**State Board of Technical Education and Training,Telangana**

**Model Question paper**

**DCE III semester**

**Semester End Examination**

**Corse Code:18C-304C** **Duration:2 hours**

**Course Name: Advanced Surveying** **Max.Marks:40 Marks**

---

## PART-A

**Answer all questions** **8x1 = 8 Marks**

1) Mention any six fundamental lines of transit theodolite.
2) List any two advantages of tangential tacheomertry.
3) Mention any two methods of setting out circular curve by chain and tape.
4) What is balancing?
5) Define Deflection angle?
6) Define Point of Commencement?
7) State the principle of EDM.
8) Define photogrammetry?

## PART-B

**Answer two questions** Each question carries three marks **4x 3 = 12 Marks**

9(a) Explain clearly the procedure of measurement of horizontal angles by repetition method?

(OR)

9(b) Two straights intersect at a chainage 1060 m and the angle of intersection is $120^0$.Calculate (a) Length of long chord(b) Tangent length (c) versed sine of the curve (d) Degree of the curve.

10(a) Explain how the additive and multiplying constants of a tacheometer determined in the field.

(or)

10(b) Write the uses of GPS in Civil Engineering.

11(a) Write the formulas for (i)apex distance (ii)tangent length (iii) length of the curve (iv)mid ordinate distance (v) degree of curve (vi)angle of intersection

(or)

11(b) Explain how a simple curve can be set out using chain and tape (any method)

12(a) Write the uses of GPS in Civil Engineering.

(OR)

12(b)Mention three advantages and three disadvantages of total station.

## PART-C

**Answer four questions. Each question carries five marks 4x 5 = 20 Marks**

13(a) The record of a closed traverse given below with one bearing and distance missing

| Line | Length(m) | Bearing |
|---|---|---|
| AB | 100 | ? |
| BC | 80.5 | 140°30’ |
| CD | 60 | 220°30, |
| DA | ? | 310°15’ |

Calculate the length of DA and bearing of AB

(OR)

13(b) Two tangents intersect at point B of chainage 380.00m, the deflection angle being $36^0$.Calculate all the data necessary for setting out a simple circular curve with a radius of 300m by Rankine’s method of deflection angles. Take peg interval 30m.

14(a) A Tacheometer fitted with an analytic lens was set up at a station A and the following readings were obtained on a vertically held staff.

| Station | Staff | Vertical Station Angle | Hair Readings |
|---|---|---|---|
| A | B.M | $-2^0 18'$ | 1.500,1.800,2.4500 |
| A | B | $+8^0 36'$ | 0.750,1.500,2.250 |

R.L of BM was 100.00 Calculate the horizontal distance AB and the R.L of B.

(OR)

14(b) Explain briefly five components of GIS

15(a) Two tangents intersect at point B of chainage 380.00m, the deflection angle being $36^0$.Calculate all the data necessary for setting out a simple circular curve with a radius of 300m by Rankine’s method of deflection angles. Take peg interval 30m.

(OR)

15(b) Calculate the perpendicular offsets at 20m interval along the tangents to set out first five pegs of simple circular curve of 250m radius.

16(a) Explain briefly five components of GIS?

(OR)

16(b) What are the four basic functions of the EDM instrument?

**Transportation Engineering**

| | | | |
|---|---|---|---|
| Course Title: | **Transportation Engineering** | Course Code : | **18C-305C** |
| Semester: | **III Semester** | Course Group : | **Core** |
| Teaching Scheme in Periods(L:T:P): | **45:15:0** | Credits : | **3** |
| Methodology : | **Lecture+Assignments** | Total Contact Periods : | **60 Periods** |
| CIE : | **60 Marks** | SEE : | **40 Marks** |

**Pre requisites**

Knowledge of Surveying and Construction materials.

**Course outcomes**

**Upon completion of the course, the student shall be able to**

| | |
|---|---|
| CO1 | Classify roads as per Indian Road Congress and describe the principles of highway alignment. |
| C02 | Identify the highway geometric elements. |
| CO3 | Examine the functions of components of highway and permanent way of Railways. |
| CO4 | Realize the significance of road safety by incorporating the concepts of traffic engineering. |
| CO5 | Differentiate between types of pavements, their construction and design principles. |

**Course Contents**

**UNIT 1: Introduction to Transportation Engineering, Highway Alignment and Surveys:**

**Duration 10 Periods (L: 7.5 – T: 2.5)**

a) Importance of transportation engineering –Different modes of transportation – Characteristics of Road Transport.

b) Highway development in India: Jayakar committee Recommendations – Functions of I.R.C. – Classification of roads as per I.R.C - Twenty year Road plans, their targets and achievements.

c) Alignment – Factors influencing alignment of road in plain and hilly areas – Highway surveys – Reconnaissance, preliminary and final location surveys.

**UNIT 2: Highway Geometrics** **Duration 10 Periods (L: 7.5 – T: 2.5)**

a) Highway cross-section in embankment and cutting - Width of pavement, shoulder, formation width, right of way, road boundaries – road widths for different classification of roads, traffic lane widths-camber – recommended I.R.C values of camber for different roads.

b) Gradients – Ruling gradient, limiting and exceptional gradients – Recommended I.R.C values of gradients.

c) Super elevation – Necessity – Curves – necessity of curves in roads –transition curves – details of alignment for horizontal and vertical curves.

d) Sight distance – Stopping sight distance –Overtaking sight distance – formula for calculation of Stopping sight distance - simple problems.

**UNIT 3: Traffic Engineering** **Duration 10 Periods (L: 7.5 – T: 2.5)**

a) Traffic studies and its importance.

b) Road intersections – grade intersections-Types–Traffic islands –Channelizing islands – Round about – Interchange – Fly over – Diamond Intersections – Clover Leaf junction.

c) Pavement marking and Kerb markings.

d) Traffic signs – Informatory signs – Mandatory signs – Cautionary signs

**UNIT 4: Highway construction and Maintenance** **Duration 10 Periods (L: 7.5 – T: 2.5)**

a) Purpose of road drainage – Surface and sub-surface drainage – Typical cross section of highway in cutting and embankment.

b) Water bound macadam roads – Materials used – Machinery used in the construction – Construction procedure – Maintenance of W.B.M road.

c) Bitumen roads-Different types – Surface dressing –interface treatments-seal coat, tack coat, prime coat, premix – Full grout and semi-grout – methods – Construction procedure.

d) Cement concrete roads-Longitudinal joints–Transverse joints –Construction joints – Construction of cement concrete roads – Machinery used for construction.

**UNIT 5: Principles of Pavement Design:** **Duration 10 Periods (L: 7.5 – T: 2.5)**

a) Pavement – Types of pavement –Functions of different components of pavements - White topping roads and its Merits.

b) Methods for design of flexible and rigid pavements – CBR test

c) Design principles of flexible pavement by CBR method.

**UNIT 6: Introduction to permanent way in Railways Duration 10 Periods (L: 7.5 – T: 2.5)**

a) Importance of Railways – Gauge – Types of gauges.

b) Structure of permanent way-Different types of rails- requirements of a good rail.

c) Rail joints – Types of joints – Requirements of good rail joint – Fixtures and fastenings of rails – coning of wheels.

d) Sleepers – Functions –-Types of sleepers–characteristics of a good sleeper – Spacing of sleepers – Sleeper density.

e) Ballast – Definition – Function – Characteristics of good ballast.

f) General description and sketches for turnout – General layout of a simple left hand and right hand turnout and different crossings.

**Reference Books**


1. Highway Engineering – S.K.Khanna & C.E.G.Justo
2. Principles of Transportation Engineering – Chakraborty
3. Principles & practices of Highway Engineering – L.R.Kadiyali
4. Introduction to Transportation Engineering – J.H.Banks
5. Text book of Highway & Traffic Engineering – Subhash C Saxena
6. Railway Engineering - Satish Chandra and M.M Agarwal


**Suggested E-learning references**

1. http://nptel.ac.in

**Suggested Learning Outcomes**

**Upon completion of the course, the student shall be able to**

1.1. State the importance and characteristics of transportation engineering.

1.2. List the different modes of transportation.

1.3. State the Jayakar committee Recommendation for Road development in India.

1.4. State the importance and functions of I.R.C

1.5. State the classification of roads as per I.R.C

1.6. State the highlights of first, second and third twenty-year Road development plans.

1.7. Define the term alignment of road.

1.8. State the factors influencing selection of alignment for a road in plain and hilly areas.

1.9. Explain various engineering surveys conducted to fix the alignment of a road.

2.1 Sketch the Highway cross-section in embankment and cutting and label its elements.

2.2 Define the terms: width of pavement, shoulder, formation width, right of way, camber, gradient, super elevation, sight distance, stopping sight distance and over taking sight distance.

2.3 Calculate the Stopping sight distance (calculation of sight distances at slopes not required)

2.4 State the different types of gradients and their recommended values.

2.5 State the necessity of providing super elevation and write the formula.

2.6 Solve simple problems on super elevation.

2.7 State the necessity of curves in highways.

2.8 State the different types of horizontal and vertical curves adopted in road

3.1. List the various traffic surveys.

3.2. State the importance of each traffic survey.

3.3. Explain with neat sketches traffic islands and Interchanges.

3.4. State the functions and types of pavement markings with sketches.

3.5. State the types of traffic signs and their purpose and give sketches.

4.1 State the necessity of road drainage.

4.2 Explain the methods of providing surface and sub-surface drainage.

4.3 State the materials used in construction of different types of roads

4.4 State the equipment/machinery used in construction of different roads.

4.5 Explain the methods of construction of different types of roads.

4.6 Explain the maintenance of WBM roads.

4.7 Explain the different types of joints used in C.C roads with sketches.

4.8 State the need for joints in C.C roads.

5.1. State the types of pavement.

5.2. Distinguish between flexible pavement and rigid pavement.

5.3. State the advantages of White topping roads over Black toping roads (Bituminous roads).

5.4. Sketch the Cross section of a pavement structure.

5.5. State the functions of components of a pavement.

5.6. State the factors affecting pavement design.

5.7. List the methods for design of flexible pavements and rigid pavements.

5.10 Explain the California Bearing Ratio (CBR) test.

5.11 Explain the design principle of flexible pavement by California Bearing Ratio (CBR) method.

6.1 State the advantages of Railways.

6.2 Define gauge and state the classification of gauges.

6.3 State the component parts of a permanent way and functions of each component.

6.4 State the requirements of good rail, rail joint, sleeper and ballast.

6.5 State the different types of rails, joints, rail fittings, sleepers, ballast, used in Indian Railways with sketches.

6.6 Describe the coning of wheels.

6.7 Describe different types of turnouts and crossings with sketches.

**Suggested Student Activities**

1. Prepare a comparative chart showing various types of roads such as WBM, Bituminous roads, Concrete roads.
2. Visit a highway construction site, identify various types of soils, the test procedures as per relevant IS codes and inference based on the test results.
3. Draw the cross-sectional details of Village roads, MDR, SH, NH using AUTO CAD and prepare a chart.
4. Collect the parameters of road intersection in the locality and prepare a model.
5. Prepare a model showing the cross-sectional details of various types of roads such as bituminous and concrete roads.
6. Prepare a chart showing the various road signs used by collecting the information from nearby RTO and prepare a report.
7. Collect information regarding various types of railway gauges used in India and other countries, prepare a chart and present it.
8. Collect videos showing the various forces acting on a railway track and present in the class.
9. Collect photographs and videos of crossings and prepare a presentation on it.
10. Collect videos related to track laying procedure and give seminar in the class.
11. Give a presentation on production of railway sleepers.
12. Collect different IRC codes pertaining to highway geometric design and prepare a chart.
13. Prepare a model of a typical railway track.
14. Collect the information regarding various railway divisions in India and their functions.

***NOTE***

Students should select any one of the above or other topics relevant to the subject approved by the concerned faculty, individually or in a group.

**CO-PO Mapping Matrix**

| | Basic knowledge | Discipline Knowledge | Experiments and practice | Engineering Tools | Engineer and society | Environment & sustainability | Ethics | Individual and Team work | Communication | Lifelong learning | Linked PO |
|---|---|---|---|---|---|---|---|---|---|---|---|
| CO | PO 1 | PO 2 | PO 3 | PO 4 | PO 5 | PO 6 | PO 7 | PO 8 | PO 9 | PO 10 | |
| CO1 | | 1 | | | 1 | 2 | | | | 1 | 2,5,6,10 |
| CO2 | 1 | 2 | | | | | | | | 2 | 1,2,10 |
| CO3 | | 2 | | 2 | 2 | | 1 | | | 2 | 2,4,5,7,10 |
| CO4 | | 3 | | | 2 | 2 | | | | 2 | 2,5,6,10 |
| CO5 | 2 | 3 | 2 | | 2 | 2 | | | | 3 | 1,2,3,5,6,10 |

**Internal Evaluation**

| Test | Units | Marks |
|---|---|---|
| Mid Sem 1 | 1 and 2 | 20 |
| Mid Sem 2 | 3 and 4 | 20 |
| Slip Test 1 | 1 and 2 | 5 |
| Slip Test 2 | 3 and 4 | 5 |
| Assignments | | 5 |
| Seminars | | 5 |
| | Total | 60 |

**Course Content and Blue Print of Marks for SEE**

<table>
<tr><th rowspan="2">Unit No</th><th rowspan="2">Unit Name</th><th rowspan="2">Periods</th><th colspan="4">Questions to be set for SEE</th></tr>
<tr><th colspan="3">R</th><th>U</th><th>A</th></tr>
<tr><td>1</td><td>Introduction to Transportation Engineering, Highway Alignment and Surveys</td><td>10</td><td rowspan="6">Q4</td><td colspan="2">Q1</td><td>Q9(a)</td><td>Q13(a)</td></tr>
<tr><td>2</td><td>Highway Geometrics</td><td>10</td></tr>
<tr><td>3</td><td>Traffic Engineering</td><td>10</td><td colspan="2">Q2</td><td rowspan="2">Q10(a)</td><td rowspan="2">Q14(a)</td></tr>
<tr><td>4</td><td>Highway construction and maintenance</td><td>10</td></tr>
<tr><td>5</td><td>Principles of Pavement Design</td><td>10</td><td rowspan="2">Q3</td><td>Q5,Q6</td><td>Q9(b),Q11(a), Q11(b)</td><td>Q13(b),Q15(a), Q15(b)</td></tr>
<tr><td>6</td><td>Introduction to permanent way in Railways</td><td>10</td><td>Q7,Q8</td><td>Q10(b),Q12(a), Q12(b)</td><td>Q14(b),Q16(a), Q16(b)</td></tr>
<tr><td colspan="2">Total</td><td>60</td><td colspan="3">8</td><td>8</td><td>8</td></tr>
</table>

## QUESTION PAPER PATTERN FOR MID SEMESTER EXAMS

| Sl.No | Description | Level | No of Questions | Marks for each question | Choice | Total Marks |
|---|---|---|---|---|---|---|
| 01 | Part-A | Remembering(R) | 4 | 1 | Nil | 4 Marks |
| 02 | Part-B | Understanding(U) | 4 | 3 | 2 | 6 Marks |
| 03 | Part-C | Application(A) | 4 | 5 | 2 | 10 Marks |
| Total Marks | | | | | | 20 Marks |

**MID SEM-I EXAM**

| S.No | Unit No | R | U | A | Remarks |
|---|---|---|---|---|---|
| 1 | Unit-I | 1,2 | 5(a) | 7(a) | |
| | | | 5(b) | 7(b) | |
| 2 | Unit-II | 3,4 | 6(a) | 8(a) | |
| | | | 6(b) | 8(b) | |
| Total Questions | | 4 | 4 | 4 | |

**MID SEM-II EXAM**

| S.No | Unit No | R | U | A | Remarks |
|---|---|---|---|---|---|
| 1 | Unit-III | 1,2 | 5(a) | 7(a) | |
| | | | 5(b) | 7(b) | |
| 2 | Unit-IV | 3,4 | 6(a) | 8(a) | |
| | | | 6(b) | 8(b) | |
| Total Questions | | 4 | 4 | 4 | |

**The length of answer for each question framed in respect of Part-A, B&C shall not exceed ¼ of a page,1 page and 2 pages respectively**

## QUESTION PAPER PATTERN FOR SEMESTER END EXAM

| Sl.No | Description | Level | No of Questions | Marks for each question | Choice | Total Marks |
|---|---|---|---|---|---|---|
| 01 | Part-A | Remembering(R) | 8 | 1 | Nil | 8 Marks |
| 02 | Part-B | Understanding(U) | 8 | 3 | 4 | 12 Marks |
| 03 | Part-C | Application(A) | 8 | 5 | 4 | 20 Marks |
| Total Marks | | | | | | 40 Marks |

| Unit No | Questions to be set for SEE | | | | |
|---|---|---|---|---|---|
| | R | | | U | A |
| I | Q4 | Q1 | | Q9(a) | Q13(a) |
| II | | | | | |
| III | | Q2 | | Q10(a) | Q14(a) |
| IV | | | | | |
| V | | Q3 | Q5,Q6 | Q9(b), Q11(a), Q11(b) | Q13(b), Q15(a), Q15(b) |
| VI | | | Q7,Q8 | Q10(b), Q12(a), Q12(b) | Q14(b), Q16(a), Q16(b) |
| Total Questions | 8 | | | 8 | 8 |

**State Board of Technical Education and Training, Telangana**

**Model Question paper**

**DCE III semester Mid Semester-I Examination**

**Corse Code: 18C-305C** **Duration:1 hour**

**Course Name: Transportation Engineering** **Max.Marks:20 Marks**

---

## PART-A

Answer **all** questions, Each Question carries one marks **4x1= 4 Marks**

1) List any two recommendation of jayakar committee for road development in India.

2) Define term alignment of road.

3) Define a) gradient b) shoulders

4) Define over taking sight distance

## PART-B

Answer **two** questions. Each question carries three marks **2x 3 = 6 Marks**

5(a) Compare targets and achievements of the road development plans in India.

OR

5(b) State the classification of roads as per I.R.C

6(a) State the necessity of curves in highways.

OR

6(b) Calculate the value of stopping sight distance for a highway with a design speed of 65 kmph. Assume suitably all the data required.

## PART-C

Answer **two** questions. Each question carries five marks **2x 5 = 10 Marks**

7(a) Explain briefly engineering surveys conducted to fix the alignment of highway.

OR

7(b) List any five factors that are influencing selection of alignment of road in hilly areas.

8(a) State the necessity of providing transition curve in highways.

OR

8(b) The radius of horizontal circular curve is 100m. The design speed is 50 kmph and the design coefficient of lateral friction is 0.15.

i) Calculate the super elevation required if full friction is assumed to develop.

ii) Calculate the coefficient of friction needed if no super elevation is provided.

**State Board of Technical Education and Training, Telangana**
**Model Question paper**
**DCE III semester Mid Semester-II Examination**

**Corse Code: 18C-305C** **Duration:1 hour**
**Course Name: Transportation Engineering** **Max.Marks:20 Marks**

---

## PART-A

Answer **all** questions, Each Question carries one mark **4x1= 4 Marks**

1) List any four traffic studies.
2) List any four types of pavement markings.
3) State the materials used for construction of W.B.M roads.
4) List any four machineries required for construction of roads.

## PART-B

Answer **two** questions. Each question carries three marks **2x 3 = 6 Marks**

5(a) State the purposes of traffic signs.

OR

5(b) State any three functions of pavement markings.

6(a) State the necessity of road drainage.

OR

6(b) State the need for providing joints C.C roads.

## PART-C

Answer **two** questions. Each question carries five marks **2x 5 = 10 Marks**

7(a) Explain briefly about round about.

OR

7(b) Explain briefly about clover leaf intersection with sketch.

8(a) Explain the construction procedure for bituminous surface dressing.

OR

8(b) Enumerate the steps in the construction of cement concrete pavements

**State Board of Technical Education and Training, Telangana**
**Model Question paper**
**DCE III Semester End Examination**

**Corse Code: 18C-305C** **Duration: 2 hours**
**Course Name: Transportation Engineering** **Max.Marks:40 Marks**

---

## PART-A

Answer **all** questions, Each Question carries one mark **8x1= 8 Marks**

1. What are the different modes of transportation?
2. List the different types of horizontals curves used in road construction.
3. List any two advantages of white topping roads.
4. List any four traffic surveys.
5. State any two functions of sub-grade in road structure.
6. List any two types of pavements.
7. List any four advantages of railways.
8. Define term gauge in railways.

## PART-B

Answer **four** questions, Each Question carries three marks 4 **x 3 = 12 Marks**

9 (a) State the importance of Transportation engineering.

OR

9 (b) State any three factors which are affecting the pavement design.

10 (a) State the importance of any three traffic surveys.

OR

10 (b) State any three characteristics of good ballast.

11(a) State any three merits of white topping roads over black toping roads.

OR

11(b) Sketch the cross section of a pavement structure and label each layer.

12(a) Sketch the cross section of a permanent way and label the components.

OR

12(b) Write a short notes on coning of wheel.

## PART-C

Answer **four** questions, Each Question carries five marks 4 **x 5 = 20 Marks**

13(a) State any five factors that are influencing alignment of a roads in plain area.

OR

13(b) State the design principles of flexible pavement by CBR method.

14(a) Explain the procedure for construction of W.B.M roads.

OR

14(b) Describe the diamond crossing with neat sketch.

15(a) Explain the California Bearing Ratio (CBR) test.

OR

15(b) Compare flexible pavement and rigid pavements in any five aspects.

16(a) Explain about different types of rail joints with sketch.

OR

16(b) Describe right hand turnout with the help of a neat sketch.

**Building Drawing**

| | | | |
|---|---|---|---|
| Course Title: | **Building Drawing** | Course Code : | **18C-306P** |
| Semester: | **III Semester** | Course Group : | **Practical** |
| Teaching Scheme in Periods(L:T:P): | **15:0:30** | Credits : | **1.5** |
| Methodology : | **Lecture+ Practical** | Total Contact Periods : | **45Periods** |
| CIE : | **60 Marks** | SEE : | **40 Marks** |

**Pre requisites**

This course requires the basic knowledge of Engineering drawing

**Course Outcomes**

On completion of the course, the student should be able to;

| | |
|---|---|
| CO1 | **Draw the conventional signs and component parts of the residential building** |
| CO2 | **Draw plan, cross section and elevation of Residential buildings of load bearing walls** |
| CO3 | **Draw plan, cross section and elevation of Residential buildings of framed structures** |
| CO4 | **Draw line diagrams of Public buildings.** |

**Course Contents**

**UNIT 1: Introduction to building drawing Duration: 15 Periods(L:5-P:10)**

a) Sketch the Conventional signs for materials like bricks, stone, concrete, wood, glass, earth, steel - water supply and sanitary fixtures like tap, wash basin, sink, W.C pan (Indian and European type), shower, flush tank.
b) Cross section of a load bearing wall showing all the components below and above the ground level.
c) Plan and cross section of column footing.
d) Plan of one brick wall meeting at a corner showing odd and even courses in English bond.
e) Elevation of a fully panelled door and label the parts
f) Elevation of fully panelled window and glazed window and label the parts
g) Elevation of King post truss and label the parts with the given data.(details of the joints not required)
h) Plan and elevation of Dog legged stair case

**UNIT 2: Residential Buildings** **Duration: 15 Periods(L:5-P:10)**

a) Plan, section and elevation of single storied load bearing type residential building from the given line diagram and set of specifications.

(i) One room (ii) One bedroom house (iii) Two bedroom house

b) Plan, section and elevation of single storied (framed structure) residential building

c) Plan, section and elevation of Two-storied residential building (framed structure type)

**UNIT 3: Public buildings** **Duration: 15 Periods(L:5-P:10)**

a) Plan of a Sanitary block of a large building showing internal water supply and sanitary fittings

b) Plan of Primary school building for 250 students (line diagram only) showing the functional requirements

c) Plan of Hostel building for 100 students (line diagram only) showing the functional requirements

d) Plan of Rural hospital building for 10 beds capacity(line diagram only) showing the functional requirements.

**Recommended Books**


1. Civil Engineering Drawing-I by Chakraborthy
2. Civil Engineering Drawing-I by N.Srinivasulu.
3. .S.C.Rangwala ,"Civil Engineering Drawing


**Suggested E-learning references**

1. http://nptel.ac.in

**Suggested Learning Outcomes**

**Upon completion of the course, the student shall be able to**

1.1. Sketch the conventional signs of various Civil Engineering materials and plumbing

1.2 Draw the cross section of load bearing wall and name all components below and above ground level.

1.3 Draw the plan and cross section of column footing below and above ground level

1.4 Draw the plan of one brick wall (English bond)

1.5. Draw the elevation of fully panelled door and label the parts

1.6 Draw the elevation of fully panelled window and glazed window and label the parts

1.7. Draw elevation of King post truss and label the parts with the given data.

1.8 Draw plan and section of a dog legged staircase with given specifications.

2.1. Draw the plan, section and elevation of single storied load bearing type residential building from the given line diagram and set of specifications. A) one room B) one bedroom house C) two bedroom house

2.2. Draw the plan, section and elevation of single storied residential building (framed structure) from the given line diagram and set of specifications.

2.3 Draw the plan, section and elevation of two storied residential building (framed structure) from the given line diagram and set of specifications

3.1 Draw the plan and cross section of sanitary block showing internal water supply and sanitary fittings.

3.2 Draw the line diagram of Primary school building for 250 students .

3.3 Draw the line diagram of a Hostel building for 100 students.

3.4 Draw the line diagram of a Rural hospital building for 10 beds capacity.

**Suggested Student Activities**

1. Tech fest/Srujana
2. Surprise Test
3. Group discussion
4. Prepare a case study of nearby small public buildings verify and draw the various views and judge the prevailing bye-laws.
5. Prepare a plan, elevation and section of your college main block.
6. Prepare a plan of temporary construction shed and draw various views.
7. Prepare a plan of vehicle parking shed and draw various views.
8. Study the difference between framed structure and a load bearing structure and present it.
9. Incorporate the concepts of Green building technology in your institute building.
10. Draw the plan elevation and sectional views of a pitched roof residential building.

**CO-PO Mapping Matrix**

| | Basic knowledge | Discipline Knowledge | Experiments and practice | Engineering Tools | Engineer and society | Environment & sustainability | Ethics | Individual and Team work | Communication | Lifelong learning | Linked PO |
|---|---|---|---|---|---|---|---|---|---|---|---|
| CO | PO 1 | PO 2 | PO 3 | PO 4 | PO 5 | PO 6 | PO 7 | PO 8 | PO 9 | PO 10 | |
| CO1 | 1 | 2 | 3 | 1 | 2 | | | 2 | 2 | | 1,2,3,4,5,8,9 |
| CO2 | 2 | 2 | 3 | 2 | 2 | | | 2 | 2 | | 1,2,3,4,5,8,9 |
| CO3 | 2 | 3 | 3 | 2 | 2 | | | 2 | 2 | 2 | 1,2,3,4,5,8,9,10 |
| CO4 | 2 | 3 | 3 | 3 | 3 | | | 2 | 2 | 2 | 1,2,3,4,5,8,9,10 |

**Course Content and Blue Print of Marks for SEE**

| Unit No | Unit Name | Periods | Questions to be set for SEE | | |
|---|---|---|---|---|---|
| | | | R | U | A |
| 1 | Introduction to building drawing | 15 | 1 | 3 | |
| 2 | Residential Buildings | 15 | | | 1 |
| 3 | Public Buildings | 15 | | | 1 |
| | Total | 45 | 1 | 3 | 2 |

## QUESTION PAPER PATTERN FOR MID SEMESTER EXAMS

| Sl.No | Description | Level | No of Questions | Marks for each question | Choice | Total Marks |
|---|---|---|---|---|---|---|
| 01 | Part-A | Remembering(R) and Understanding(U) | 2 | 5 | Nil | 10 Marks |
| 02 | Part-B | Application(A) | 2 | 10 | 1 | 10 Marks |
| | | | | Total Marks | | 20 Marks |

## QUESTION PAPER PATTERN FOR SEMESTER END EXAM

| Sl.No | Description | Level | No of Questions | Marks for each question | Choice | Total Marks |
|---|---|---|---|---|---|---|
| 01 | Part-A | Remembering(R) and Understanding(U) | 4 | 5 | Nil | 20 Marks |
| 02 | Part-B | Application(A) | 2 | 20 | 1 | 20 Marks |
| | | | | Total Marks | | 40 Marks |

**State Board of Technical Education and Training, Telangana**

**Mid Sem-I Model Question paper**

**DCE III semester**

**Corse Code:18C-306 P** **Duration:1 hour**

**Course Name: Building Drawing** **Max.Marks:20**

**PART-A**

**Answer all questions** **2 x 5= 10 Marks**

1. Sketch the conventional signs for the following .
    a) Bricks
    b) Wood cross section
    c) Stone Masonry
    d) W.C pan (Indian type)
2. Sketch the plans of odd course and even course of one Brick wall of English Bond meeting at corner and name the components.

**PART-B**

**Answer any one question** **1 x 10 = 10 Marks**

3. Draw the cross section of load bearing wall and Name any 8 components below and above the ground level.(assume suitable dimensions)
4. Draw the elevation of fully panelled door of size 1200mm X 2100mm (not to scale) and labels the parts.

**State Board of Technical Education and Training, Telangana**
**Mid Sem-II Model Question paper**
**DCE III semester Examination**

**Corse Code:18C-306 P** **Duration:1 hour**
**Course Name: Building Drawing** **Max.Marks:20**

## PART-A

**Answer all questions** **2 x 5= 10 Marks**

1. Draw the plan of a single room of size 4 m x 3 m. Take wall thickness as 300mm
2. Draw the cross section of load bearing wall with foundation. Wall thickness is 300 mm.

   Assume suitable dimensions

## PART-A

**Answer any 1question** **1x10 = 10 Marks**

1. The line sketch of a small residential building is shown in Fig. Draw to scale of 1:100 the following views :
   i. Dimensioned Plan 10 marks

   Specifications:-

   a) All the dimensions in line sketch are internal measurements.
   b) Foundation : 1200mm below the ground level and 1000mm wide
   c) C.C Bed : 1000mm wide and 300mm deep
   d) Footings : 2 Nos. With suitable offsets using RR Masonry in CM (1:6)
   e) Basement : 450mm height with suitable width of Stone masonry in CM (1:6)
   f) Super structure : walls 300mm thick Height from top of the floor to bottom of the roof slab is 3000mm. All walls are of BW in CM(1:6)
   g) RCC roof slab 120mm thick.
   h) Doors , Windows, Ventilators and Lintels may be suitably provided.
   i) Parapet : 150mm thick, Height 750mm.
   j) Sunshades for all external doors and windows are to be suitably provided.

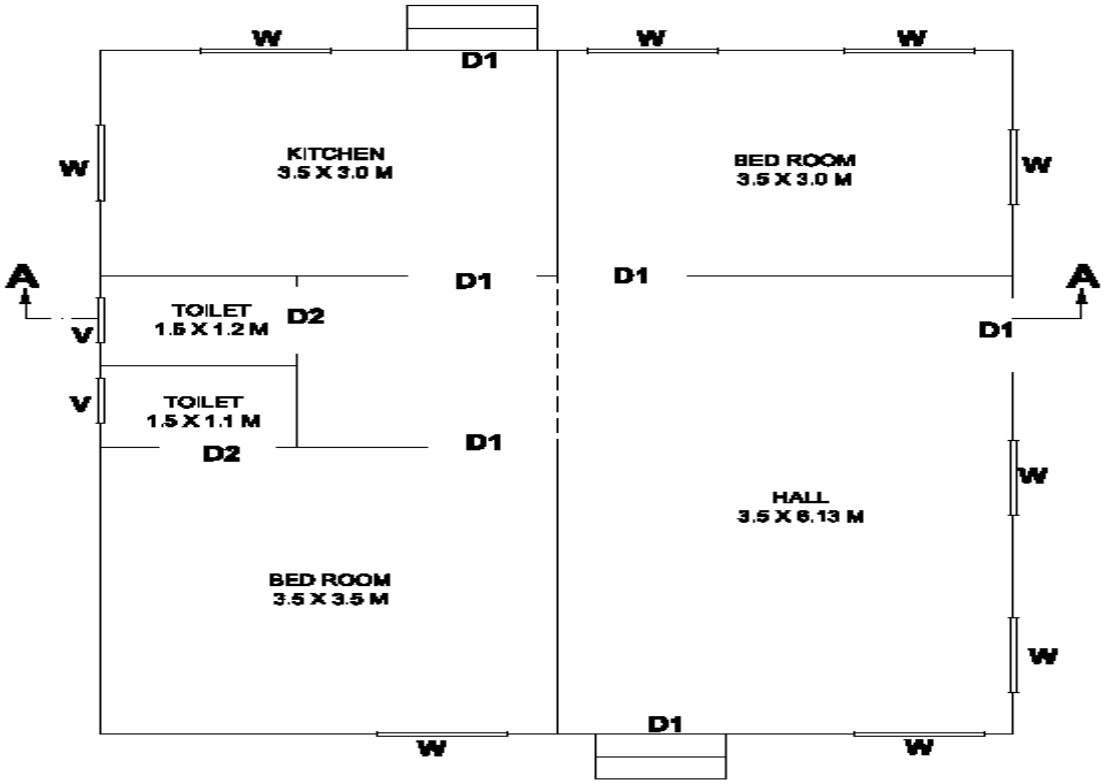


2. The line sketch given below shows the plan of a residential building. The dimensions given in the sketch are internal dimensions of the rooms. Draw the Cross section along ABCD of the given line sketch to a scale of 1:100

Specifications

i. Foundations :- The depth of foundation shall be 1000mm below ground level. Plain cement concrete (1:4:8) bed in the foundation will be 800mm wide and 200mm deep. Width of first and second footings will be 500mm and 400mm respectively. Whereas the depth of both the footings will be 400mm each using stone masonry in C.M (1:8).

ii. Basement:- The height of the basement is 600mm. Damp proof course of walls in the basement is 150mm thick.

iii. Super structure: - All the walls except the partition wall between the toilets are 200mm thick. The partition wall is 100mm thick.

iv. A square brick pillar 200mm X 200mm is provided at left corner in front veranda.

v. Lintels and Sunshades :- Lintels with RCC (1:2:4) are provided on all openings and depth of 150mm with a bearing of 150mm on either side. Sunshades 100mm thick at the wall face and 75mm thick at the free end are provided projecting 600mm from lintels over all exterior openings. A continuous sunshade is provided both sides of front veranda.

vi. Veranda: In front veranda RCC beam 200mm X 250mm is laid over the brick pillar, the bottom of the beam being at 2100mm from the floor level.

vii. Height of super structure : The walls in the super structure are taken to a height of 3300mm.

viii. Roofing : Roofing consists of RCC (1:2:4) slab 110mm thick and weather proof course 50mm thick.

ix. Flooring : Flooring shall be of Shahabad stone 25mm thick over 80mm thick CC bed of (1:3:6) over a sand filling in the basement.

x. Parapet : Parapet is 100mm thick and 700mm height.

xi. Assume suitable sizes for steps, doors, windows and ventilators.

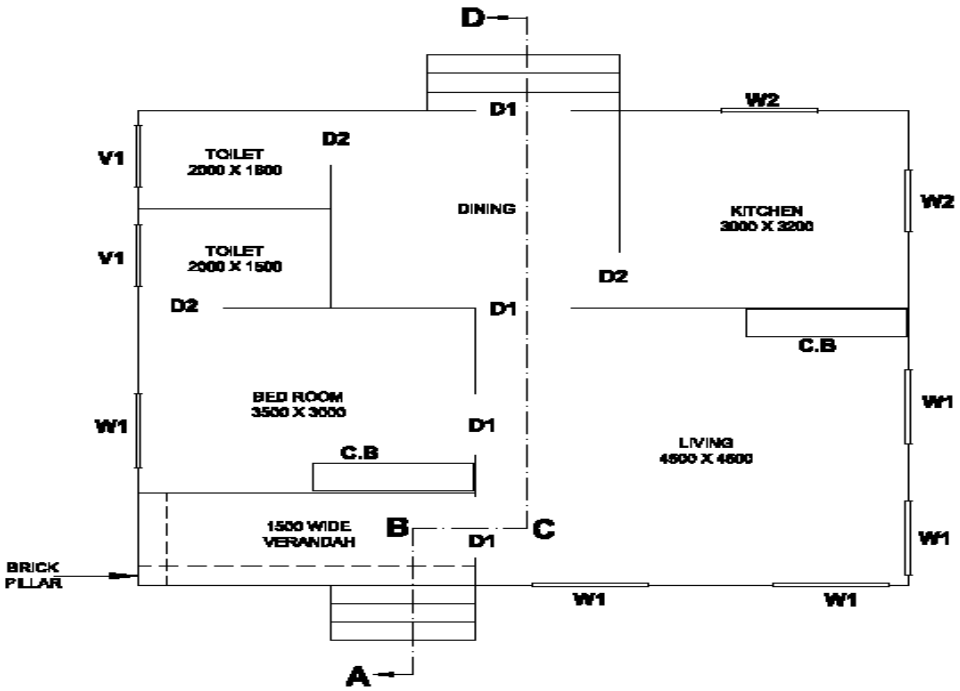

**State Board of Technical Education and Training,Telangana**
**Semester End Examination Model Question paper**
**DCE III semester**

**Corse Code:18C-306 P** **Duration:2 hours**
**Course Name: Building Drawing** **Max.Marks:40**

## PART-A

**Answer all questions each question carries 5 marks .** **4x5=20 Marks**

1. Sketch the conventional signs for the following materials,

   a).Stone masonry
   b) Wood longitudinal section
   c) Wash basin
   d) Glass
   e) Concrete

2. Draw the cross section of load bearing wall and Name any 6 components below And above the ground level.
3. Draw the elevation of king post truss and labels the parts
4. Draw the elevation of fully panelled window of size 1000mm x 1400 mm (not to scale)and label the parts

## PART- B

**Answer any one question** **1x20=20 Marks**

5. The line sketch given below shows the plan of a Single storied two bedroom load bearing residential building. The dimensions given in the sketch are internal dimensions of the rooms. Draw to a scale of 1:100

   a) Plan
   Specifications:

i. Foundation :- 1.0m wide and 1.0m deep
ii. Levelling course :- 1.0m wide and 0.2m height in CC 1:4:8
iii. First footing :- 0.75m wide and 0.4m height in stone masonry in C.M (1:8)
iv. second footing :- 0.60m wide and 0.4m height in stone masonry in C.M (1:8)
v. Basement :- 0.45m wide and 0.6m height in stone masonry in C.M (1:8)
vi. Flooring :- 20mm thick Marble flooring set in 20mm thick C.M (1:4) over a bed of C.C (1:5:10) and 150mm thick sand cushion.

vii. Super structure :- 300mm thick brick masonry in C.M (1:6), Height 3000mm
viii. Parapet wall :- 150mm thick and 0.75m height in brick masonry in C.M (1:6)
ix. Lintels :- 150mm thick in R.C.C (1:2:4)
x. Sunshades :- 75mm thick flat, projecting 0.60m from face of wall.
xi. Roofing :- R.C.C slab 120mm thick all over with full bearing.
xii. Doors :- MD= D=1.0m X 2.0m; D1=0.9m X 2.0m
xiii. Windows :- W= 1.0m X 1.22m;
xiv. Ventilators :- V 0.45m X 0.75m

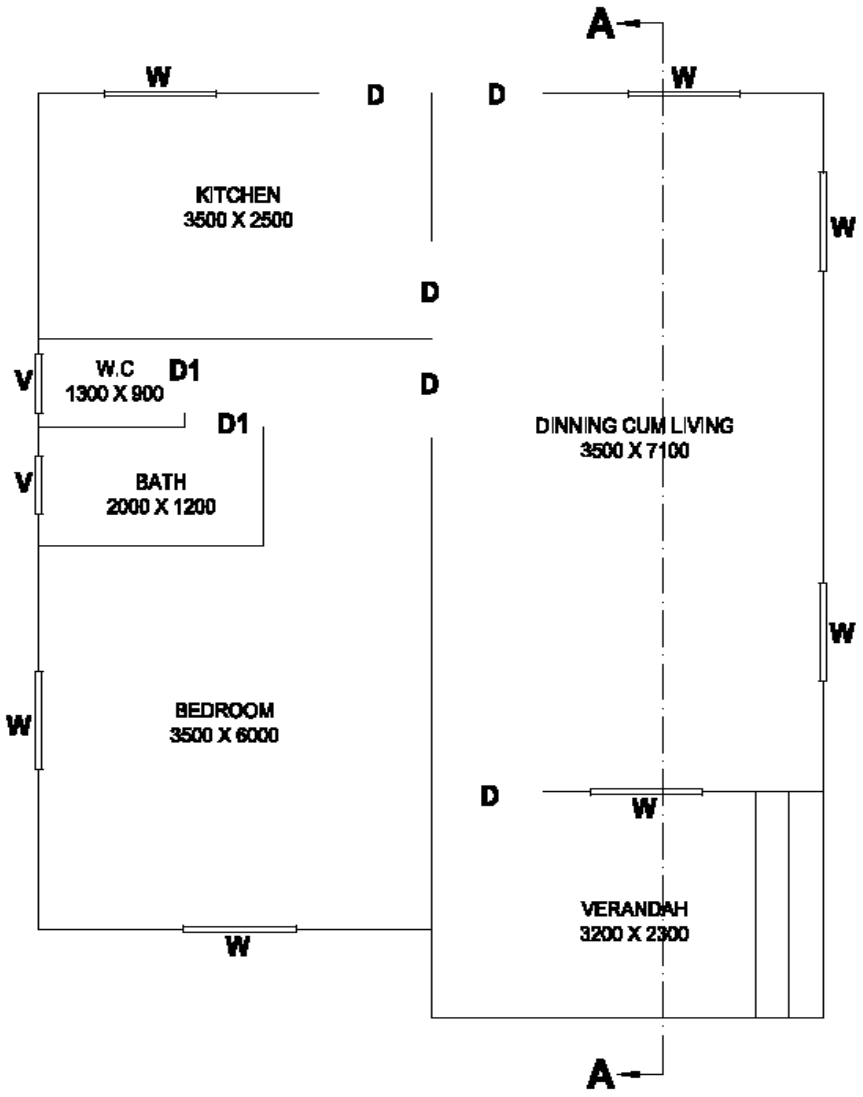


6.a) Draw a line diagram for a proposed Rural hospital of 10 beds capacity. ( to a suitable scale) showing the functional requirements 20

# Material Testing Lab

| | | | |
|---|---|---|---|
| Course Title: | **Material Testing Lab** | Course Code : | **18C-307P** |
| Semester: | **III Semester** | Course Group : | **Practical** |
| Teaching Scheme in Periods(L:T:P): | **15:0:30** | Credits : | **1.5** |
| Methodology : | **Lecture+ Practical** | Total Contact Periods : | **45 Periods** |
| CIE : | **60 Marks** | SEE : | **40 Marks** |

**Pre requisites**

This course requires the knowledge of Construction Materials

**Course Outcomes**

Upon the completion of the course, the student shall be able to

| | |
|---|---|
| CO1 | Select suitable sample of material for testing based on BIS |
| CO2 | Test Bricks to check their suitability for construction works as per IS specification |
| CO3 | Check suitability of Ordinary Portland cement for a particular work as per standards |
| CO4 | Select suitable sample of aggregate based on tests for use in mortar and concrete |

**Course Content**

| Unit No | Unit Name | Periods |
|---|---|---|
| 1 | Tests on Bricks | 15 |
| 2 | Tests on Cement | 15 |
| 3 | Tests on Aggregates | 15 |
| | Total | 45 |

**Course Contents**

**UNIT 1: Tests on Bricks** **Duration: 15 Periods(L:5-P:10)**

a) Dimension Test
b) Water absorption,
c) Crushing strength
d) Efflorescence.

**UNIT 2: Tests on Cement** **Duration: 15 Periods(L:5-P:10)**

a) Fineness test
b) Normal consistency test
c) Initial and final setting times of cement.
d) Compressive strength of cement.

**UNIT 3: Tests on Aggregates** **Duration:15 Periods(L:5-P:10)**

a) Water absorption of Sand,
b) Bulking of Sand,
c) Percentage of voids in Coarse and fine aggregates,
d) Sieve analysis of course and fine aggregates
e) Fine Silt in aggregate

**KEY Competencies to be achieved by the student**

| S. No | Experiment Title | Key Competencies |
|---|---|---|
| 1 | Dimension Test on Bricks | Taking dimensions |
| 2 | Water Absorption on bricks | Taking weight of dry bricks and wet bricks |
| 3 | Crushing strength test on bricks | 1.Preparation of 1:1 cement mortar and application of cement mortar over top and bottom faces of brick |
| | | 2.Application of load gradually at the rate 14 $N/mm^2$ per minute till failure occurs |
| | | 3.Recording the load at FAILURE |
| 4 | Efflorescence test on bricks | 1.Examining the bricks for traces of efflorescence |
| 5 | Fineness test on cement | 1.Taking weight of cement sample and its residue |
| 6 | Normal consistency test on cement | 1.Measurement of required percentage of water to cement accurately |
| | | 2.Preparation of sample in the mould |

| | | |
|---|---|---|
| | | 3.Noting down the plunger penetration on vicat's scale |
| 7 | Setting times of cement | 1.Measurement of required percentage of water to cement accurately |
| | | 2.Preparation of sample. |
| | | 3.Noting down the needle penetration on Vicat's scale |
| | | 4.Recording time at required needle penetration |
| 8 | Compressive strength test on cement | 1.Taking weights of different grades of standard sand and cement accurately |
| | | 2.Addition of required percentage of water to cement accurately |
| | | 3.Application of load at required rate and recording of load at failure accurately |
| 9 | Water absorption of sand | Accurate weighing of dry sand and wet sand |
| 10 | Bulking of sand | 1.Measuring the volume of sand and water accurately |
| | | 2.Addition of water to sand in accurate increments |
| | | 3.Measuring the increase in volume of sand |
| 11 | Percentage of voids in coarse and fine aggregates | 1.Taking the weight of cylindrical measure accurately |
| | | 2.Calculating the bulk density of coarse/ fine aggregates both in loose and compacted states |
| | | 3.Taking the weight of coarse/ fine aggregate and containers |
| 12 | Sieve analysis of coarse and fine aggregate | 1.Correct arrangement of sieves used for the sieve analysis of fine or coarse aggregate |
| | | 2.Weighing the residue in each sieve accurately |
| 13 | Fine Silt in Aggregate | 1.Observation of silt layer above the sand layer and taking its thickness |

**Reference Books**


1. Laboratory manual on Testing of Engineering Materials by Hemant Sood, New Age International Publishers, New Delhi
2. Building and Construction materials Testing and Quality Control by M.L.Gambhir and Neha Jamwal, McgrawHill,India
3. Material Testing Laboratory manual by C.B.Kukreja, Kishore.K and Ravi Chawla, Standard Publishers Distributors

**Suggested E-learning references**

1. http://nptel.ac.in
2. https://docslide.us/documents/som-bmt-lab-manual-final.html
3. http://www.nitttrchd.ac.in/sitenew1/nctel/civil.php

**Suggested Learning Outcomes**

**Upon completion of the course, the student shall be able to**

1.1 State the significance of Dimension test on bricks

1.2 State the standards on Dimensions of bricks used for various construction works

1.3 Explain the procedure for conducting dimension test on bricks

1.4 Conduct dimension test on bricks

1.5 State the significance of water absorption test on bricks

1.6 State the standards on water absorption of bricks used for various construction works

1.7 Explain the procedure for conducting water absorption test on bricks

1.8 Perform water absorption test on bricks

1.9 State the significance of crushing strength test on bricks

1.10 State the standards on crushing strength of bricks used for various construction works

1.11 Explain the procedure for conducting crushing strength test on bricks

1.12 Determine crushing strength of bricks by testing

1.13 Compare observations of crushing tests conducted on different types of bricks like clay bricks, fly ash bricks, concrete blocks

1.14 State the importance of efflorescence test on bricks

1.15 State the standards on efflorescence of bricks used for various construction works

1.16 Explain the procedure for conducting efflorescence test on bricks

1.17 Determine the percentage of efflorescence by conducting efflorescence test on bricks

1.18 Compare observations of efflorescence tests conducted on different types of bricks like clay bricks, fly ash bricks, concrete blocks

2.1 State the significance of workability and Compression tests in field.

2.2 State the method of preparing sample and the number of samples required for given work

2.3 Use apparatus required for conducting fineness test on cement

2.4 State the standards on fineness of cement

2.5 Explain the procedure for conducting the fineness test on cement

2.6 Conduct the fineness test on cement and record the observation

2.7 State the significance of normal consistency of cement

2.8 Use apparatus required for conducting normal consistency test on cement sample

2.9 Explain the procedure for conducting normal consistency test on cement sample

2.10 Find the normal consistency of given cement sample

2.11 Draw the inference from the observations of normal consistency of fresh cement and old cement samples of same and different grades

2.12 State the significance of setting times on construction activity

2.13 State the standards on initial and final settings times of various types of cement

2.14 Use apparatus required for conducting initial and final setting times of given cement sample

2.15 Explain the procedure for conducting initial and final setting times of given cement sample

2.16 Find the initial setting time of given cement sample

2.17 Draw the inference from the observations of initial setting times of fresh and old cement samples of same and different grades

2.18 State the significance of compressive strength of cement used for various civil engineering works

2.19 State various grades of cement available in the market based on compressive strength of the cement

2.20 State the standards on compressive strengths of different types of cements used in construction

2.21 Use apparatus required for conducting compressive strength test on given cement sample

2.22 Explain the procedure for conducting compressive strength test on given cement sample

2.23 Find the compressive strength of given cement sample

2.24 Draw the inference by comparing the observations of compressive strength test on fresh and old cement samples

3.1 State the significance of water absorption of sand used for construction

3.2 State standards on water absorption of sand

3.3 Use apparatus required for conducting water absorption test on given sand sample

3.4 Explain the procedure for conducting water absorption test on given sand sample

**3.5** Find water absorption test on given sand sample

3.6 Explain the effect of bulking of sand on quantities of material and quality mortar and concrete

3.7 State the significance of bulking of sand on strength and durability properties of mortar and concrete

3.8 Use apparatus required for conducting bulking of sand test on given sand sample

3.9 Explain the procedure for conducting bulking of sand test on given sand sample

3.10 Draw the inferences from the observations of bulking of sand tests conducted on fine, medium and coarse sands

3.11 Explain the field method of adjustment for bulking of fine aggregate

3.12 Use apparatus required for conducting test to determine bulk density of coarse and fine aggregate

3.13 Find the bulk density of given sample of coarse and fine aggregate

3.14 Explain the effect of voids in coarse and fine aggregates on strength and durability properties of mortar and concrete

3.15 Use apparatus required for conducting tests to find percentage of voids present in aggregate

3.16 Find the percentage of voids present in given sample of aggregate

3.17 State the significance sieve analysis of fine and coarse aggregates on properties of concrete

3.18 State the grading limits of fine aggregate as per IS: 383-1970

3.19 Use apparatus required for conducting sieve analysis of fine aggregate

3.20 Calculate the fineness modulus of given sample of aggregate

3.21 State the effect of silt in aggregate on properties of cement mortar and concrete

3.22 Use apparatus required for determining the silt content in aggregate

3.23 Explain the field method to determine quantity of silt content in aggregate

3.24 Find the content of fine silt in aggregate

**Suggested Student Activities**

1. Collect the information with proper justification for the fine aggregates used for different constructional activities such as foundation, plastering, concreting etc mentioning zonal classification.
2. Collecting different samples of materials from market and testing in lab
3. Collecting Specifications of various materials and correlate with standards.
4. Collecting and study of various IS codes regarding testing of materials
5. Field tests on various building materials such as cement, sand, brick etc as per codes.
6. Tech fest/Srujana
7. Paper/Poster presentation
8. Quiz
9. Group discussion
10. Surprise Test

**CO-PO Mapping Matrix**

| | Basic knowledge | Discipline Knowledge | Experiments and practice | Engineering Tools | Engineer and society | Environment & sustainability | Ethics | Individual and Team work | Communication | Lifelong learning | Linked PO |
|---|---|---|---|---|---|---|---|---|---|---|---|
| CO | PO 1 | PO 2 | PO 3 | PO 4 | PO 5 | PO 6 | PO 7 | PO 8 | PO 9 | PO 10 | |
| CO1 | | 2 | 1 | 2 | | | 1 | 2 | | 1 | 2,3,4,7,8,10 |
| CO2 | | 2 | 2 | 2 | | | 1 | 2 | 2 | 1 | 2,3,4,7,8,9,10 |
| CO3 | | 2 | 3 | 3 | | | 1 | 2 | 2 | 1 | 2,3.4,7,8,9,10 |
| CO4 | | 2 | 3 | 3 | | | 1 | 2 | 2 | 1 | 2,3.4,7,8,9,10 |

**State Board of Technical Education and Training,Telangana**
**Mid Sem-I Model Question paper**
**DCE III semester**

**Corse Code:18C-307 P** **Duration:1 hour**
**Course Name: Material Testing Lab** **Max.Marks:20 Marks**

---

***Instructions to the Candidate:*** 1 x 20 =20 Marks

***(i)Pick and Answer any One of the following Questions from the given list.***
***(ii) Check the suitability of the given construction material by drawing suitable inference***

1) Check the suitable of given sample of bricks by conducting dimension test
2) Calculate the water absorption of given sample of bricks
3) Calculate the crushing strength of given sample of bricks
4) Determine the effect of efflorescence on given sample of bricks

**State Board of Technical Education and Training,Telangana**
**Mid Sem-II Model Question paper**
**DCE III semester**

**Corse Code:18C-307 P** **Duration:1 hour**
**Course Name: Material Testing Lab** **Max.Marks:20 Marks**

---

***Instructions to the Candidate:*** 1 x 20 =20 Marks

***(i) Pick and Answer any One of the following Questions from the given list .***
***(ii) Check the suitability of the given construction material by drawing suitable inference***

1) Calculate the fineness of given sample of cement
2) Determine the Standard consistency of given sample of cement
3) Determine the initial setting time of cement
4) Calculate the compressing strength of given cement mortar cubes

**State Board of Technical Education and Training,Telangana**
**Semester End Examination**
**Model Question paper**
**DCE III Semester**

**Corse Code:18C-307 P** **Duration:2 hours**
**Course Name: Material Testing Lab** **Max.Marks:40 Marks**

---

***Instructions to the Candidate:*** 1 x 40 =40 Marks

***(i) Pick and Answer any One of the following Questions from the given list***
***(ii) Check the suitability of the given construction material by drawing suitable inference***

1) Check the suitable of given sample of bricks by conducting dimension test
2) Calculate the water absorption of given sample of bricks
3) Calculate the crushing strength of given sample of bricks
4) Determine the effect of efflorescence on given sample of bricks
5) Calculate the fineness of given sample of cement
6) Determine the Standard consistency of given sample of cement
7) Determine the initial setting time of cement
8) Calculate the compressing strength of given cement mortar cubes
9) Calculate the water absorption of given sample of sand
10) Determine the percentage of bulking in given sample of sand by field method
11) Calculate the percentage of voids in given sample of aggregate
12) Calculate the fineness modulus of given sample of aggregate
13) Calculate the percentage of fine silt in given sample of aggregate

**Advanced Surveying Lab**

| | | | |
|---|---|---|---|
| Course Title: | **Advanced Surveying Lab** | Course Code : | **18C-308P** |
| Semester: | **III Semester** | Course Group : | **Practical** |
| Teaching Scheme in Period(L:T:P): | **15:0:30** | Credits : | **1.5** |
| Methodology : | **Lecture+ Practical** | Total Contact Periods : | **45Periods** |
| CIE : | **60 Marks** | SEE : | **40 Marks** |

## Pre requisites

Basics of chain surveying, compass surveying and levelling

**Course Outcomes**

| | |
|---|---|
| CO1 | Use and operate Theodolite in the field |
| CO2 | Apply the knowledge of Theodolite in different operations of civil engineering projects |
| CO3 | Apply the knowledge of principles and purpose of tacheometry in finding out the constants |
| CO4 | Formulate the setting out of curve by linear and angular methods |

**Course Content**

| Unit No | Unit Name | Periods |
|---|---|---|
| 1 | Theodolite Surveying and Trigonometric Levelling | 15 |
| 2 | Tacheometric Surveying | 15 |
| 3 | Curve Setting | 15 |
| Total | | 45 |

**Course Contents**

**UNIT 1**

**a) Theodolite surveying** **Duration: 9Periods(L:3.0-P:6.0)**

Study of transit Theodolite- Temporary adjustments of Theodolite - Measurement horizontal angles by reiteration and repetition method - Measurement of vertical angles - Determination of inaccessible horizontal distance involving two Instrument stations.

**b) Trigonometric levelling** **Duration: 6 Periods(L:2.0-P:4.0)**

Determination of height and reduced level of the top and bottom of accessible object - Determination of distance and elevation of an inaccessible object involving two instrument stations.

**UNIT 2**

**a) Tacheometry** **Duration: 15Periods(L:5.0-P:10.0)**

Determination of constants of Tacheometry - Determination of horizontal distance and elevation by Stadia Tacheometry.

**Unit 3**

**Curve setting:** **Duration: 15 Periods(L:5.0-P:10.0)**

Setting out a simple curve by chain and tape method. - Setting out a simple curve by one Theodolite and two Theodolite methods.

| S.No | Experiment Title | Key Competency |
|---|---|---|
| 1 | Study of transit Theodolite | Holding the instrument and fixing on tripod<br>Identifying parts and their functions<br>Conducting operations like swinging and transiting |
| 2 | Temporary adjustments | Spreading the tripod on ground properly for easy levelling and stability<br>Centering the instrument exactly over station using plumb bob and by moving legs<br>Operating foot screws to level<br>Eyepiece adjustment<br>Focusing the object glass |
| 3 | Measurement of horizontal angle by<br>Repetition method<br>Reiteration method and<br>Measurement of bearing | Operating lower and upper clamps and their tangent screws reading the Vernier accurately<br>Recording the observations at their appropriate positions on page of theodolite field book |

| | | |
|---|---|---|
| 4 | Measurement of Vertical angles | Operating vertical circle clamp and its tangent screw<br>Recording the observations at their appropriate positions on page of theodolite field book |
| 5 | Determination of inaccessible horizontal distance involving two instrument stations | Measuring the horizontal angles accurately and calculating the distance |
| 5 | **Trigonometric Levelling** - | 1.Determination of height and reduced level of the top and bottom of accessible object.<br>2.Determination of distance and elevation of an inaccessible object involving two instrument stations. |
| 8 | Field Exercises using Tacheometer | • Calculates constants K &C<br>• Finds the height and reduced level of an object whose base is accessible<br>• Finds the height and reduced level of an object whose base is inaccessible |
| 9 | Setting out curves | • Sets out a given simple curve using chain and tape by<br>(i)Offsets from long chord<br>(ii) Offsets from successive bisection of chords,<br>(iii) radial and perpendicular offsets from tangent and<br>(iv) Offsets from chord produced<br>• Sets out a given simple curve using one Theodolite<br>• Sets out a given simple curve using Two Theodolite |

**Reference Books**


1. Surveying I& II by B.C.Punmia
2. Surveying by S.K. Husain
3. Surveying and levelling I& II by T .PKanetkar

4. Surveying by S.K.Dugal
5. Surveying by R.Agor(Khanna Publisher)
6. Surveying (McGrawhill) by N.N. Basak
7. Higher Surveying by A.M.Chandra (New Age Int)

**Suggested E-learning references**

1. http://nptel.ac.in

**Suggested Learning Outcomes**

After the completion of course, the student should be able to

1.1 Know the parts of Theodolite
1.2 Perform temporary adjustment.
1.3 Measurement of horizontal and vertical angles
1.4 Record the observations in the field book.
1.5 Computation of included angles, latitudes and departures from field notes
2.1 Determine constants of a given Tachometer in the field
2.2 Take Tacheometric observations.
2.3 Compute heights and distances from field observations.
2.4 Determine horizontal and vertical distances of accessible objects by using a Theodolite.
2.5 Determine horizontal and vertical distances of inaccessible objects by using two Theodolite stations.
3.1 Compute the elements of curve.
3.2 Sets out simple curve by chain and tape
3.3 Setting out simple circular curve by one Theodolite and two Theodolite methods.

**Suggested Student Activities**

1. Road survey (at least for 150m) by total station.
2. Conduct a traverse survey of a given plot and find out the area.
3. Prepare the contour maps of the given area in your locality.
4. Set out a center line of a given building using theodolite.
5. Find out the parameters of a curve for an existing road in your locality

7. Detailed study report on telescope used in surveying instrument.

8. To set out two parallel lines along both the sides of an obstacle by using theodolite

9. To find the distance between two inaccessible points by using trignometric levelling.

10. Make a presentation on refraction error, curvature error caused by telescope

11. Prepare a report on any one of the following. Arial survey, photogrammetric survey, hydrographic survey, military survey and mine survey.

**CO-PO Mapping Matrix**

| | Basic knowledge | Discipline Knowledge | Experiments and practice | Engineering Tools | Engineer and society | Environment & sustainability | Ethics | Individual and Team work | Communication | Lifelong learning | Linked PO |
|---|---|---|---|---|---|---|---|---|---|---|---|
| CO | PO 1 | PO 2 | PO 3 | PO 4 | PO 5 | PO 6 | PO 7 | PO 8 | PO 9 | PO 10 | |
| CO1 | 1 | 2 | 3 | 3 | | | | 2 | 1 | | 1,2,3,4,8,9 |
| CO2 | 2 | 2 | 3 | 3 | | | | 2 | 2 | | 1,2,3,4,8,9 |
| CO3 | 2 | 3 | 3 | 3 | | | | 3 | 2 | | 1,2,3,4,8,9 |
| CO4 | 3 | 3 | 3 | 3 | | | | 2 | 3 | | 1,2,3,4,8,9 |

**State Board of Technical Education and Training, Telangana**

**MID SEMESTER -I Model Question paper**

**DCE III Semester**

**Course Code: 18C-308P** **Duration:1 hour**

**Course Name: Advanced Surveying Lab** **Max.Marks:20 Marks**

---

***Instructions to the Candidate:***

***Pick and Answer any One of the following Questions from given list.***

1.Measurement of horizontal angle by Reiteration method

2. Measurement of horizontal angle by repetition method

3. Measure vertical angle by using theodolite.

4. Perform the temporary adjustments of a theodolite in field.

5. Find the RL of the top of a electric pole using a transit theodolite.

**State Board of Technical Education and Training, Telangana**

**MID SEMESTER-II Model Question paper**

**DCE III Semester**

**Corse Code:18C-308P** **Duration:1 hour**

**Course Name: Advanced Surveying Lab** **Max.Marks:20 Marks**

---

***Instructions to the Candidate:***

***Pick and Answer any One of the following Questions from given list***

1. Determination of Stadia constants.
2. Determination of horizontal distance by Horizontal sight.
3. Determination of Horizontal distance and elevation for inclined sight with staff held vertical by Stadia hair method.
4. Determination of height of an object whose base is accessible
5. Determination of height of an object whose base is inaccessible

**State Board of Technical Education and Training, Telangana**

**Semester End Examination**

**Model Question paper**

**DCE III Semester**

**Corse Code:18C-308 P** **Duration:2 hours**

**Course Name: Advanced Surveying Lab** **Max.Marks:40 Marks**

---

***Instructions to the Candidate:***

***Pick and Answer any One of the following Questions from given list.***

1. Measurement of horizontal angle by Reiteration method
2. Measurement of horizontal angle by repetition method
3. Measure vertical angle by using theodolite.
4. Determination of height of an object whose base is accessible
5. Determination of Stadia constants.
6. Determination of horizontal distance by Horizontal sight.
7. Determination of Horizontal distance and elevation for inclined sight with staff held vertical by Stadia hair method.
8. Setting out simple curve by Offsets from Long chord method
9. Setting out simple curve by Rankine's method using Theodolite.
10. Setting out Compound curves given two Radii by Deflection angle method

## Civil Engineering CAD Lab

| | | | |
|---|---|---|---|
| Course Title: | **Civil Engineering CAD Lab** | Course Code : | **18C-309P** |
| Semester: | **III Semester** | Course Group : | **Practical** |
| Teaching Scheme in Periods (L:T:P): | **15:0:30** | Credits : | **1.5** |
| Methodology : | **Lecture+ Practical** | Total Contact Periods : | **45 Periods** |
| CIE : | **60 Marks** | SEE : | **40 Marks** |

**Pre requisites**

Knowledge of basic CAD and advanced CAD ( CAD 2D & 3D) and knowledge of Building drawing and Building services.

**Course Outcomes**

**After completion of the course, the student shall be able to**

| | |
|---|---|
| CO1 | Develop 2D drawings for civil engineering building drawings using CAD |
| CO2 | Apply the concept of layers to show various building services |
| CO3 | Create 2D drawings for various building services using CAD |
| CO4 | Develop 3D drawings and models for civil engineering drawings using CAD |

**Course Content**

| Unit No | Unit Name | Periods |
|---|---|---|
| 1 | 2-D drawings using CAD Software | 15 |
| 2 | Service drawings using CAD Software | 15 |
| 3 | 3-D drawings using CAD Software | 15 |
| Total | | 45 |

**Course Contents**

**UNIT 1:2-D Drawings using CAD Software** **Duration: 15 Periods(L: 5 – P: 10)**

Draw conventional signs & symbols used in civil engineering drawing – Elevation of fully panelled door, partly glazed and partly panelled door/window shutter – Section of a load bearing wall, isolated column footing – Plan and sectional elevation of a dog-legged stair case – Building Drawings 2BHK building with site plan – Plan of Primary school building – Plan of Rural Hospital building – Typical floor plan of Apartment consisting G+5 floors

**UNIT 2: Service drawings using CAD Software** **Duration: 15 Periods(L: 5 – P: 10)**

Introduction to layers, – Preparation of a simple water supply and sanitary layout – Preparation of Firefighting layout for college building – Preparation of foundation plan for a residential building and framed structure – Preparation of Plan and Section of a Manhole and Septic tank with soak pit – Shallow well Rain water harvesting & Solar water heater for terrace

**UNIT 3: 3-D Drawings using CAD Software** **Duration: 15 Periods(L: 5 – P: 10)**

Draw the Isolated Column footing in 3D – load bearing wall foundation in 3D – Single bed roomed building in 3D – double bed roomed building in 3D.

**Reference Books**


1) Learn AUTOCAD in a easy way by Sunil K. Pandey,Unitech books
2) Mastering AUTOCAD by George Omura and Brain C.Benton
3) Online manuals and tutorials-AUTODESK


**Suggested E-learning references**

1. http://nptel.ac.in
2. www.sketchup.com
3. www.autodesk.in/products/3ds-max/overview

**Suggested Learning Outcomes**

**After completion of the course, the student shall be able to**

1.1 Draw conventional signs used in civil engineering using CAD

1.2 Draw cross section of Load bearing wall using CAD

1.3 Draw isolated column footing showing different components using CAD

1.4 Draw Plan and section elevation of a dog-legged staircase using CAD

1.5 Prepare drawing Plan, Elevation, section and site plan of 2BHK building using CAD

1.6 Draw a plan of a primary school using CAD

1.7 Create drawing Plan of Rural Hospital using CAD

1.8 Practice drawing typical floor Plan of Apartment consisting G+5 floors using CAD

2.1 Create various layers with different properties in CAD

2.2 Create a layer of a simple water supply and sanitary layout of a building using CAD

2.3 Create a layer showing fire fighting arrangements in a building using CAD

2.4 Create a layer showing the foundation plan for a residential building using CAD

2.5 Draw plan and section of a manhole and septic tank with a soak pit using CAD

2.6 Draw shallow well rain water harvesting structure using CAD

2.7 Draw solar water heater using CAD

3.1 Create 3D model of isolated column footing using CAD

3.2 Develop 3D drawing of load bearing wall foundation using CAD

3.3 Prepare the 3D drawing of a single bed roomed building using CAD

3.4 Prepare the 3D drawing of a double bed roomed building in using CAD

**Suggested Student Activities**

1. Collect information regarding various CAD softwares available and give a presentation on them.
2. Visit an Engineering consultancy which deals with building design and drafting and prepare a report based on the observations made.
3. Collect videos showing 3D models of various buildings.
4. Visit a construction site of a building and match drawings with the execution of work and give a seminar based on the observations made.
5. Tech fest/Srujana
6. Paper/Poster presentation
7. Quiz
8. Group discussion
9. Surprise test

**CO-PO Mapping Matrix**

| | Basic knowledge | Discipline Knowledge | Experiments and practice | Engineering Tools | Engineer and society | Environment & sustainability | Ethics | Individual and Team work | Communication | Lifelong learning | Linked PO |
|---|---|---|---|---|---|---|---|---|---|---|---|
| CO | PO 1 | PO 2 | PO 3 | PO 4 | PO 5 | PO 6 | PO 7 | PO 8 | PO 9 | PO 10 | |
| CO1 | | 3 | 3 | 3 | | | 1 | | 2 | 2 | 2,3,4,7,9,10 |
| CO2 | | 3 | 3 | 3 | | | 1 | | 2 | 1 | 2,3,4,7,9,10 |
| CO3 | | 3 | 3 | 3 | | | 1 | | 2 | 1 | 2,3,4,7,9,10 |
| CO4 | | 3 | 3 | 3 | | | 1 | 2 | | 2 | 2,3,4,7,8,10 |

**State Board of Technical Education and Training, Telangana**

**MID SEM-I Examination**

**Model Question paper**

**DCE III Semester**

**Corse Code:18C-309P** **Duration:1 Hour**

**Course Name: Civil Engineering CAD Lab** **Max.Marks:20**

---

***Instructions to the Candidate:***

***(i)Pick and Answer any One of the following Questions from given lot.*** **1x20=20M**

1) Prepare a drawing showing the section and elevation of a doglegged staircase in CAD
2) Prepare drawing Plan, Elevation, section and site plan of 2BHK building in CAD
3) Create drawing Plan of Rural Hospital in CAD
4) Draw a typical floor plan of Primary School in CAD
5) Draw the typical floor Plan of Apartment (consisting of 4flats for G+5 floors) in CAD

**State Board of Technical Education and Training, Telangana**

**MID SEM-II Examination**

**Model Question paper**

**DCE III Semester**

**Corse Code:18C-309P** **Duration:1 Hour**

**Course Name: Civil Engineering CAD Lab** **Max.Marks:20**

---

***Instructions to the Candidate:***

***(i)Pick and Answer any One of the following Questions from given lot.*** **1x20=20M**

1) Draw Plan, Elevation, section and site plan of given 2BHK building in CAD
2) Create a layer showing the water supply and sanitary layout for the given plan of a building in CAD
3) Create a layer showing the Firefighting layout for college building in CAD
4) Prepare the foundation plan for the given framed structure in another layer in CAD
5) Using layer show the Plan and Section of a Manhole and Septic tank with soak pit for the given building in CAD
6) Create another layer showing Shallow well rain water harvesting &Solar water heater on terrace for the given building in CAD

**State Board of Technical Education and Training, Telangana**

**Semester End Examination**

**Model Question paper**

**DCE III Semester**

**Corse Code:18C-309P** **Duration:2 hours**

**Course Name: Civil Engineering CAD Lab** **Max.Marks:40**

---

***Instructions to the Candidate:***

***(i)Pick and Answer any One of the following Questions from given lot.*** **1x40=40M**

1) Prepare a drawing showing the section and elevation of a doglegged staircase in CAD
2) Prepare drawing Plan, Elevation, section and site plan of 2BHK building in CAD
3) Create drawing Plan of Rural Hospital in CAD
4) Draw a typical floor plan of Primary School in CAD
5) Draw the typical floor Plan of Apartment (consisting of 4flats for G+5 floors) in CAD
6) Draw Plan, Elevation, section and site plan of given 2BHK building in CAD
7) Create a layer showing the water supply and sanitary layout for the given plan of a building in CAD
8) Create a layer showing the Firefighting layout for college building in CAD
9) Prepare the foundation plan for the given framed structure in another layer in CAD
10) Using layer show the Plan and Section of a Manhole and Septic tank with soak pit for the given building in CAD
11) Create another layer showing Shallow well rain water harvesting &Solar water heater on terrace for the given building in CAD
12) Create drawing of isolated column footing in 3D with given dimensions in CAD
13) Develop drawing of load bearing wall foundation in 3D with given dimensions in CAD

**Communication Skills and Life Skills**

| | | | |
|---|---|---|---|
| Course Title | **Communication Skills and Life Skills** | Course Code | **18C- 310 P** |
| Semester | **III** | Course Group | **Foundation** |
| Teaching Scheme in Periods- L: T:P | **15:0:30** | Credits | **1.5** |
| Methodology | **Lecture + Practical** | Total Contact Hours | **45 Periods (3 Periods per Week)** |
| CIE | **60 Marks** | SEE | **40 Marks** |

## Rationale:

This course is designed to impart communication skills and life skills to the students of diploma which will help them a great deal in personal and professional fronts.

## Prerequisites:

This course requires the basic knowledge of vocabulary, grammar, and four language learning skills, viz. Listening, Speaking, Reading and Writing.

## Course Outcomes:

| | At the end of the course the students will have the ability to: |
|---|---|
| **Listening Skills** | Identify the main or the central idea.<br>Listen for specific details.<br>Learn the pronunciation. |
| **Communication Skills – I** | Learn relevant vocabulary to make introductions.<br>Learn to introduce oneself in formal and informal situations.<br>Learn vocabulary and expressions useful for describing objects<br>Describe objects |
| **Communication Skills – II** | Learn vocabulary to talk about the past<br>Describe the incidents that happened in the past<br>Learn the techniques of organising the matter / content for one-minute speech.<br>Speak fluently and accurately using appropriate body language. |
| **Life Skills – I** | Think positively.<br>Develop positive attitude.<br>Overcome negative attitude.<br>Know the importance of setting goals.<br>Set goals using SMART features. |
| **Life Skills – II** | Know the reasons for a problem.<br>Learn to overcome problems.<br>Learn the various techniques to solve the problems.<br>Learn to make proper decisions on time.<br>Think ‘out of the box’.<br>Learn to be creative.<br>Think innovatively.<br>Think critically. |

| | |
|---|---|
| **Life Skills – III** | Know how to be a leader.<br>Learn the qualities of a good leader.<br>Learn the qualities of a good team.<br>Learn the advantages and disadvantages of a team.<br>Manage time effectively.<br>Learn various time management techniques.<br>Learn the importance of prioritisation. |

## CO-PO Matrix

| | Course Outcome | | Linked PO |
|---|---|---|---|
| **CO 1** | Listening for main idea and specific details | **R/U/A** | **1, 2, 3, 4, 5,7,8, 9,10** |
| **CO 2** | Introduce oneself and Describe Objects | **R/U/A** | **1,2,3,8,9,10** |
| **CO 3** | Talk about the past and speak fluently for one minute | **R/U/A** | **1,2,3,7,8.9,10** |
| **CO 4** | Develop positive attitude and set short term and long term goals | **R/U/A** | **1,2,3,7,8,9,10** |
| **CO 5** | Learn to solve a problem, make decisions and think innovatively | **R/U/A** | **1,2,3,7,8,9,10** |
| **CO6** | Learn to become a good team member and leader | **R/U/A** | **1,2,3,7,8,9,10** |

## Course Contents:

**I. Listening Skills** **Duration: 9**

1. Listening – I
    - Digital Camera
    - A Dialogue
    - Wild Animal / Human conflict
2. Listening – II
    - A Recipe
    - A Telephone conversation
    - An Interview

**II. Communication Skills – I** **Duration:6**

3. Introducing Oneself
4. Describing Objects

**III. Communication Skills – II** **Duration:6**

5. Talking About the Past
6. Just A Minute

**IV. Life Skills – I** **Duration:6**

7. Attitude
8. Goal Setting

**V. Life Skills – II** **Duration:9**

9. Problem Solving and Decision-Making Skills
10. Critical Thinking & Creativity

**VI. Life Skills – III** **Duration:9**

11. Leadership and Teamwork
12. Time Management

**Suggested Student Activities:**

- Listening Comprehension
- Seminars
- Paper Presentations
- Line ups for introducing oneself
- Describing persons / places / things
- Picture description
- Role Plays
- Dumb charades
- What is in the bag? (Identify the objects)
- Games using Online Dictionaries
- Sharing the information using emails, chats and groups
- Just A Minute
- Writing diary events
- Find a solution to the problem
- Making innovative things through recycling
- Creating advertisements
- Five-minute activities on Life Skills
- Watching videos on life skills and making presentations
- Case studies

**Evaluation Pattern:**

**I. Continuous Internal Examination:** **60 Marks**

a. **Mid Sem- I** 20 marks

Syllabus:

i. Listening Skills
ii. Communication Skills - I

b. **Mid Sem – II** 20 Marks

Syllabus:

i. Communication Skills - II

ii. Life Skills - I

c. **Internal assessment**: 20 marks

| | |
|---|---|
| i. Seminars: | 10 marks |
| ii. Assignments: | 5 marks |
| iii. Lab record submission: | 5 marks |

**II. Semester End Examination : 40 Marks**

| | |
|---|---|
| a. Listening: | 10 Marks |
| *b.* JAM or Role plays: | 15 Marks |
| c. *Viva Voce* on any life skills topic : | 15 Marks |

**References:**


Flint, Chrisand Jamie Flockhart*Listening: A2 (Collins English for Life: Skills)*Collins. 2013

*Brown, Stephen E. English in Everyday Life. McGraw-Hill Education.2008*

Mohanraj, Jayashree. *Let Us Hear Them Speak: Developing Speaking-Listening Skills in English*.Sage. 2015

Susan Earle – Carlin. *Q Skills for Success: Listening and Speaking 5: Student Book with Online Practice*. Oxford University Press. 2013

Kumar, Sanjay and Pushpa Latha. *Communication Skills: A Work Book*.Oxford University Press. 2018

Carnegie, Dale.*The Leader in You*. Simon & Schuster: 1995

Carnegie, Dale.*The Art of Public Speaking*. Prabhat Prakashan. NewDelhi.2013

Kaye, Martin. *Goal Setting (Workbook Included): Goals & Motivation: Introduction To A Complete & Proven Step-By-Step Blueprint For Reaching Your Goals (Goal Setting Master Plan 1).* Kindle Edition. MK Coaching.2016.

West, Steven. *Critical Thinking Skills: Practical Strategies for Better Decision making, Problem-Solving and Goal Setting.* Kindle Edition.2018

Tracy, Brain. *Goals*. Berret-Koehler PublishersInc. San Francisco. 2017

Tracy, Brain. *Master your Time Master your Life.* Penguin Random House Inc. New York. 2017

Sean Covey . *The 7 Habits of Highly Effective Teens.* Simon and Schuster,2011

**E-Learning Resources:**

http://www.bbc.co.uk/worldservice/learningenglish/youmeus/learnit/learnitv39.shtml

https://www.examenglish.com/leveltest/listening_level_test.htm

https://www.oxfordonlineenglish.com/listening?utm_referrer=https%3A%2F%2Fwww.google.co.in%2F

https://takeielts.britishcouncil.org/prepare-test/free-ielts-practice-tests/listening-practice-test-1

https://learnenglish.britishcouncil.org/en/listening

https://www.cambridgeenglish.org/learning-english/activities-for-learners/?skill=listening

https://www.businessenglishsite.com/business-english-listening.html

**BOARD DIPLOMA EXAMINATION (C-18)**

**THIRD SEMESTER 18 COMMON-310P**

**COMMUNICATION SKILLS AND LIFE SKILLS**

**MID SEM - I**

**Time : 1 Hour** **Total Marks: 20 Marks**

**Part – A** **10 marks**

1. Listening Comprehension: 5 X 2 = 10

*(Teacher should give the questions before reading the passage given below)*

Florence Nightingale was an English social reformer and a statistician, and the founder of modern nursing. She was born in Florence, Italy, on May 12, 1820. Part of a wealthy family, Nightingale defied the expectations of the time and pursued what she saw as her God-given calling of nursing during the Crimean War. She and a team of nurses improved the unsanitary conditions at a British base hospital, greatly reducing the death count. Her writings sparked worldwide health care reform, and in 1860 she established St. Thomas' Hospital and the Nightingale Training School for Nurses. A revered hero of her time, she died on August 13, 1910, in London. Nightingale came to prominence while serving as a manager and trainer of nurses during the Crimean War, in which she organized care for wounded soldiers. She gave nursing a favourable reputation and became an icon of Victorian culture, especially in the persona of "The Lady with the Lamp" making rounds of wounded soldiers at night.

**Questions:**

1. Who was Florence Nightingale?
2. When and where was she born?
3. What does the passage convey?
4. When did she pass away?
5. Where did she establish nursing school?

**PART- B** **10 Marks**

**Instruction: Answer any one of the questions in 150 words.**

2. How do you introduce yourself formally in an interview?
3. Describe your polytechnic.

**BOARD DIPLOMA EXAMINATION (C-18)**

**THIRD SEMESTER 18 COMMON-310P**

**COMMUNICATION SKILLS AND LIFE SKILLS**

**MID SEM - II**

**Time : 1 Hour** **Total Marks: 20 Marks**

**Part – A** **10 marks**

**Instruction: Answer any one of the following questions in 150 words.**

1. Describe how you have spent your summer vacation.

2. What are the features of good JAM presentation? What precautions do you before speaking for one minute on the given topic?

**Part – B** **10 marks**

**Instruction: Answer any one of the following questions in 150 words.**

3. What is positive attitude? Give examples of positive attitude from your life.

4. Mention your long term goal with SMART features. How do you achieve it?

**BOARD DIPLOMA EXAMINATION (C-18)**
**THIRD SEMESTER 18 COMMON-310P**
**COMMUNICATION SKILLS AND LIFE SKILLS**
**SEMESTER END EXAM**

**Time : 3 Hours** **Total Marks: 40 Marks**

**Part – A** **10 marks**

**1.** Listen to the following passage and answer the questions give below it**. 5 X 2 = 10**

(Teacher should give the questions before reading the passage)

Answer the following questions after teacher reads the following paragraph.

Prof. Jayashankar was born to Mahalaxmi and Laxmi Kantha Rao on 6th August 1934 in Akkampet village, Warangal District. He was a Doctorate in Economics. He worked as a Vice-Chancellor of Kakatiya University. He worked in many capacities. He was popularly known as "Pedda Sir." He inspired many a people to fight for the cause of Telangana Statehood.

At the age of twelve, Jayashankar refused to sing songs in praise of the Nizam and insisted on singing Vande Mataram instead. As an intermediate student, in 1952, he protested against State Reorganization Committee plan to merge with the Andhra Rashtra. He took an active part in the agitations of "Non – Mulki go back" and " Idli Sambar go back." He took an active part in Telangana separate statehood agitation in 1969 too. In 1999, Prof. Jayashankar started the Telangana Development Forum in the USA which helped to propagate the injustice, discrimination and exploitation meted out to Telangana region and people in the aspects of employment, funds and water resources. He relentlessly put his efforts to end the struggle of Telangana people. He passed away on June 21, 2011. He was 76 years old at the time of his death.

**Questions:**

1. Where was Prof. Jayashankar born?
2. Why didn't he sing songs in praise of the Nizam?
3. Why did Jayashankar start the Telangana Development Forum in USA?
4. What are the two agitations in which he took an active part?
5. What is the meaning of 'relentlessly'?

**Part – B** **15 marks**

2. JAM / Role Plays

**Part – C** **15 marks**

3. Viva Voce on Life Skills topics

| | | | |
|---|---|---|---|
| Course Title: | **Skill Upgradation** | Course Code : | |
| Semester: | **III Semester** | Course Group : | **Practical** |
| Teaching Scheme in Periods(L:T:P): | **0:0:105** | Credits : | **2.5** |
| Type of Course : | **Practicals** | Total Contact Periods : | **105 Periods** |

# SKILL UPGRADATION(SUGGESTED STUDENT ACTIVITIES)

# ACTIVITIES IN APPLIED ENGINEERING MATHEMATICS

## ACTIVITIES

1 .Write a short notes on different types of integrals.

2. Prepare a notes on different methods to evaluate integrals.

3. List out Properties of definite integrals.

4. List out and explain various applications of definite integrals.

5. Explain the procedure to solve problems on Areas using integration

6. Explain the procedure to find volumes of irregular shapes of solids of revolution using integration.

7. Prepare a presentation to find Mean values and R.M.S values of any given function.

8. Explain the procedure to calculate approximate area by using Trapezoidal rule.

9. Explain the procedure to calculate approximate area by Simpson's 1/3 rule

10. Prepare a presentation on solving $1^{st}$ order differential equations using any suitable method.

## Rubrics for Activity assessment(in Applied Engineering Mathematics)

| CATEGORY | 4 | 3 | 2 | 1 |
|---|---|---|---|---|
| **Mathematical Concepts** | Explanation shows complete understanding of the mathematical concepts used to solve the problem(s). | Explanation shows substantial understanding of the mathematical concepts used to solve the problem(s). | Explanation shows some understanding of the mathematical concepts needed to solve the problem(s). | Explanation shows very limited understanding of the underlying concepts needed to solve the problem(s) OR is not written. |
| **Procedures** | Typically, uses an efficient and effective procedure to solve the problem(s). | Typically, uses an effective procedure to solve the problem(s). | Sometimes uses an effective procedure to solve problems, but does not do it consistently. | Rarely uses an effective procedure to solve problems. |
| **Explanation** | Explanation is detailed and clear. | Explanation is clear. | Explanation is a little difficult to understand, but includes critical components. | Explanation is difficult to understand and is missing several components OR was not included. |
| **Working with Others** | Student was an engaged partner, listening to suggestions of others and working | Student was an engaged partner but had trouble listening to others | Student cooperated with others, but needed prompting to stay on-task. | Student did not work effectively with others. |

| | | | | |
|---|---|---|---|---|
| | cooperatively throughout lesson. | and/or working cooperatively. | | |
| **Mathematical Errors** | 90-100% of the steps and solutions have no mathematical errors. | Almost all (85-89%) of the steps and solutions have no mathematical errors. | Most (75-84%) of the steps and solutions have no mathematical errors. | More than 75% of the steps and solutions have mathematical errors. |

**SKILL UPGRADATION ACTIVITIES IN ENGINEERING SUBJECTS**

1. Prepare a report on the significance of centroid of electric fan, moving vehicles and rotating shafts.
2. Visit any nearby construction site and participate in various construction activities and write a report.
3. Make regular visits to ongoing Metro Rail Works and observe the advanced construction techniques used in Civil engineering and submit a report.
4. Collect and study different photographs of various types of foundations of Civil engineering works and prepare a report.
5. Prepare a residential layout in AUTOCAD for a colony taking into account the requirement of approach roads, tree plantations, water supply and sanitation.
6. Compare the measured angles, Levels and Contours of the college campus obtained from Total station and the data obtained from Traditional Surveying instruments.
7. Prepare a presentation explaining the procedure of setting out centre lines of Column footings of a Framed Structure by using Total Station and Theodolite.
8. Visit a highway construction site and prepare cross sectional drawings and topo sheets and prepare a power point presentation with photographs and videos.
9. Visit a nearest railway station and collect detailed information regarding railway track such as ballast, sleeper, gauge and signals and prepare a presentation and submit a report.

**Note:**

1. **The above activities are indicative. The teacher may assign any other activity relevant to the course based on resources available.**
2. **Rubrics for student activities can be generated by subject teacher**