6451

BOARD DIPLOMA EXAMINATION, (C-16)

MARCH/APRIL-2019

DME - FOURTH SEMESTER EXAMINATION

PRODUCTION DRAWING

Time: 3Hrs Max. Marks: 60

PART-A

4x5=20M

Instructions: 1) Answer all questions. Each question carries five marks
2) Draw neatly with proportionate dimensioning.
3) Use of production drawing tables are allowed.

1) For each of the following hole and shaft assembly.

$\begin{matrix} +0.040 \\ +0.000 \end{matrix}$ Hole :150 $\qquad$ $\begin{matrix} +0.068 \\ +0.043 \end{matrix}$ Shaft:150

Calculate:

a) Hole tolerance b) Shaft tolerance
c) Minimum material condition d) Maximum material condition
e) Type of fit

2) Draw the conventional symbols for the following:

a) Flatness b) Cylindricity
c) Angularity d) Profile of a surface
e) Run-out

3) Write the surface roughness value for the following:

a) Hot rolling b) Filling
c) Honing d) Sand casting
e) Drilling

4) Write the meaning of following symbols/specifications:

a) Fe 410 Cu k b) 30 C5 B0
c) Hex bolt M 30x1.0x100 lSl36454.6 d) 0.Ring 10/2.5, vifor
d) Bearing no.305

PART-B

40M

Instructions: 1) Answer any one question.
2) Each question carries Forty marks.
3) Priority should be given to the accurancy,neatness and dimensioning

5) Study the given assembly drawing of the screw jack shown in fig.1
a) Draw the part drawings of body and screw. 20M
b) Apply suitable tolerances and fits. 5M
c) Prepare the process chart for screw. 7M
d) Show the surface roughness symbols 4M
e) Indicate suitable geometrical tolerances 4M

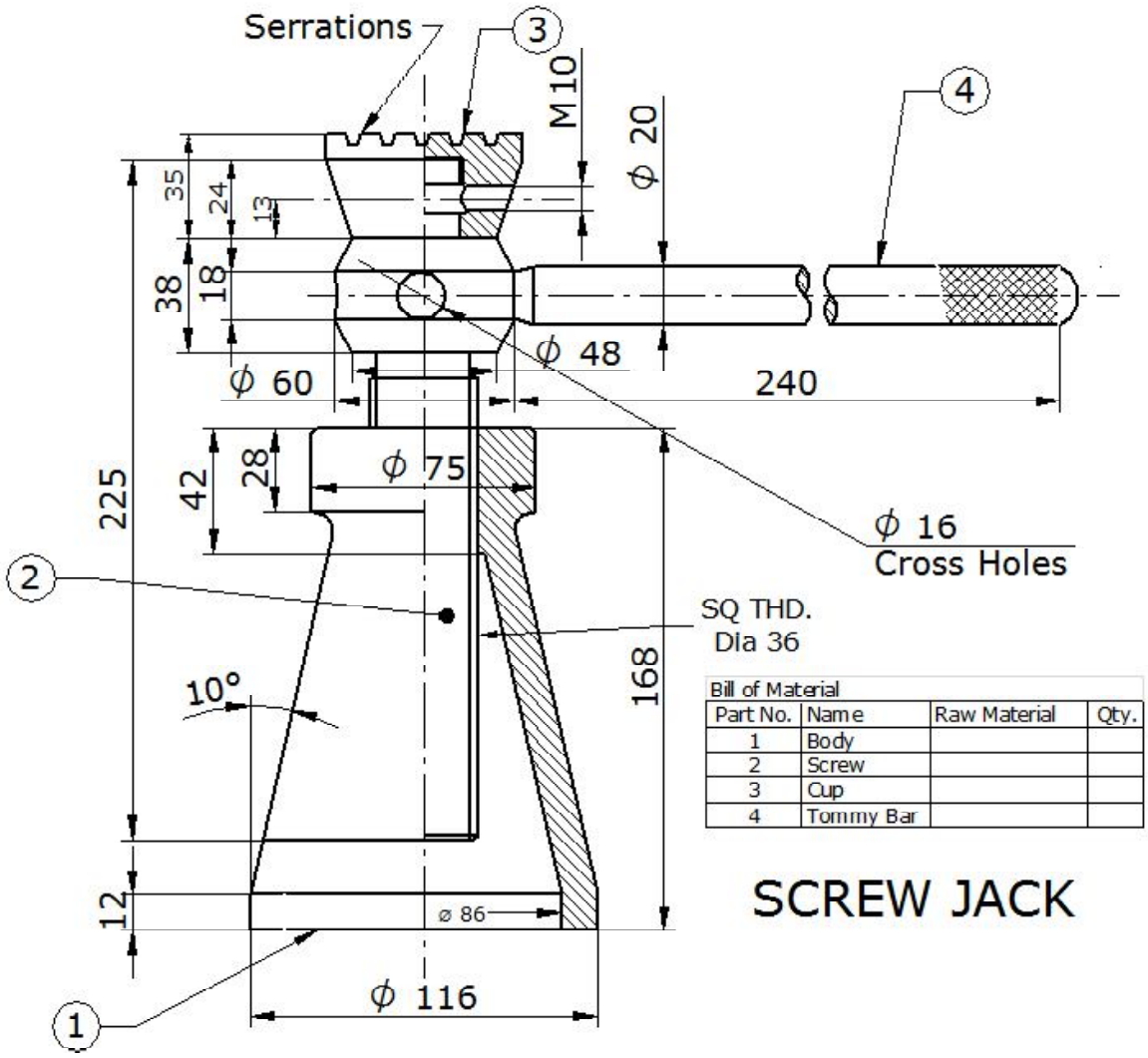

Bill of Material

Part No.	Name	Raw Material	Qty.
1	Body		
2	Screw		
3	Cup		
4	Tommy Bar		

SCREW JACK

6) Study the given assembly drawing of the Eccentric shown in fig.2

a) Draw the part drawings of strap and shrave(2)

b) Apply duitable tolearance and fits. 20

c) Prepare the process chart for strap4 7

d) Shoe the surface roughness symbols. 4

e) Indicate suitable geometrical tolerances 4

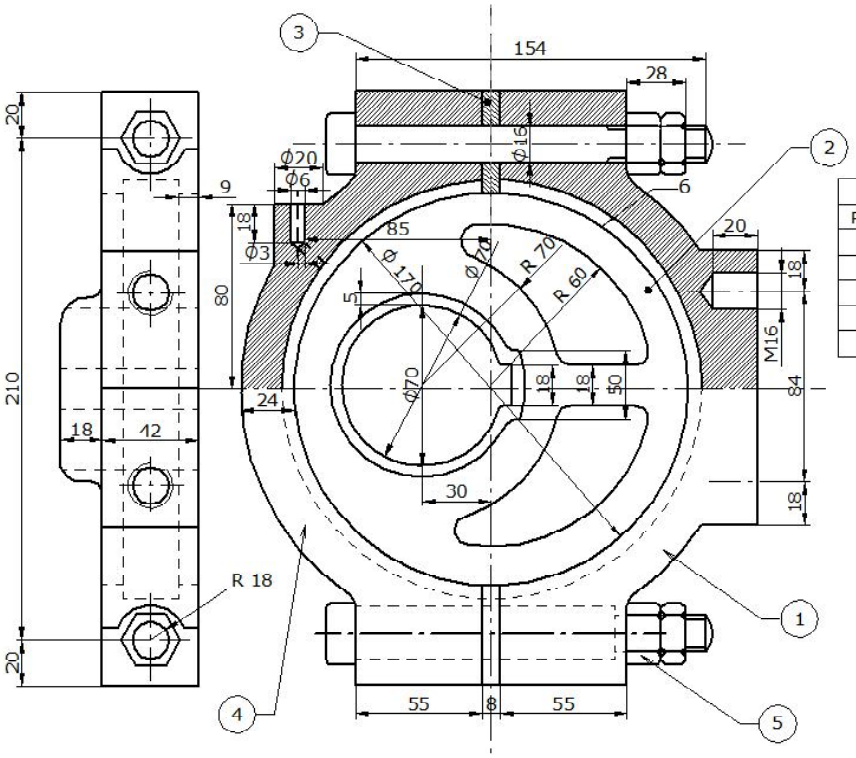

Bill Of Material			
Part No	Name	Material	Qty
1	Strap		
2	Sheave		
3	Shim		
4	Strap		
5	Bolt with Nut		

ECCENTRIC

* * *