6426

BOARD DIPLOMA EXAMINATION

MARCH/APRIL - 2019

DIPLOMA IN CIVIL ENGINEERING

QUANTITY SURVEYING

FOURTH SEMESTER EXAMINATION

Time: 3 Hours **Total Marks: 80**

PART - A (3m x 10 = 30m)

Note 1:Answer all questions and each question carries 3 marks

2:Answers should be brief and straight to the point and shall not exceed 5 simple sentences

1. Define estimate and write any two objects of preparing quantity surveying

2. Write the formats for preparation of detailed estimation &abstract estimation

3. For a hipped roof shown in the figure below, calculate the following

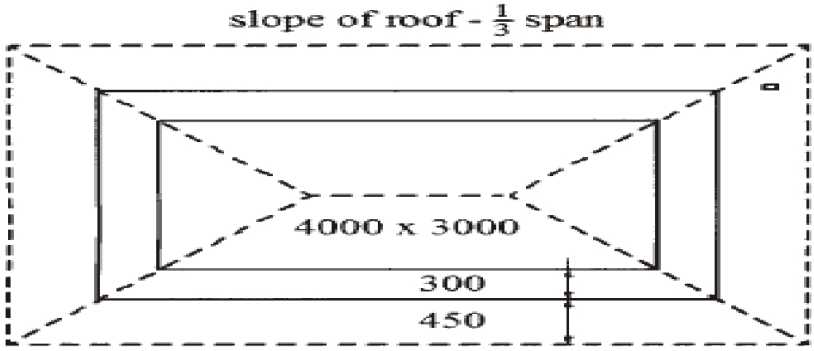

Note : All dimensions are in mm.

(a) Length of ridge piece
(b) Length of common rafters
(c) Length of eaves board

4. The Fig. shown below the plan and section of a compound wall. Calculate the quantity of earthwork excavation for

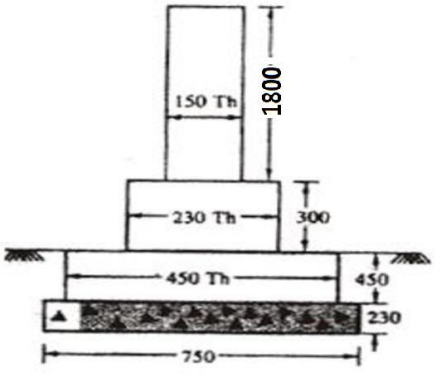

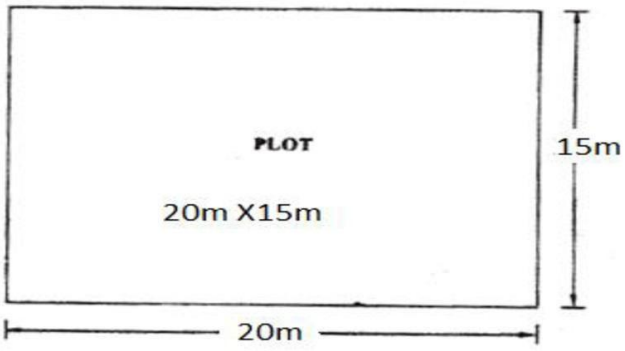

foundation.[All dimensions in section are in mm] the centre line dimension of the plot is 20mX15m

5. Calculate the quantity of cement required in bags for brick masonary in CM (1:6) using country bricks for 19.5m^3 of work, if 0.38 m^3 of mortar required for 1m^3 of masonary

6. Calculate the weight of two legged stirrup of 6mm dia for a simply supported beam of size 300X450mm.Concrete cover at all sides is 40mm and unit weight of rod is 0.23 kg/m

7. **Find the volume of earth work in an embankment of length 1.5km, top width of road is 3.75m and depth is 2m, side slope 1.5:1**

8. The elevation of VRCC brace of OHSR shown in the figure below. Calculate the VRCC (1 : 2 : 4) brace beam , if the section at mid-span is 45 cm x 65 cm

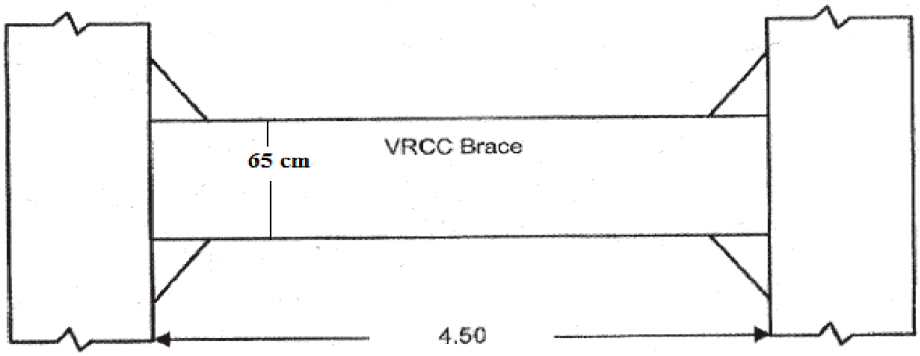

9. Write short notes on Book value

10. The cost of a newly constructed building including all provision is Rs 20, 00,000/-. Calculate monthly rent, if the reasonable interest on capital is 10%

PART - B (10m x 5 = 50m)

Note 1:Answer any five questions and each carries 10 marks

2:The answers should be comprehensive and the criteria for valuation is the content but not the length of the answer

11. Prepare the detailed estimate for the following items of work from the given Fig (a) Earth work excavation for all column footings

(b) P.C.C. (1:4:8) using 40mm H.B.G metal for foundations (under Columns only)

(c) R.C.C (1:1.5:3) using H.B.G metal for all column footings

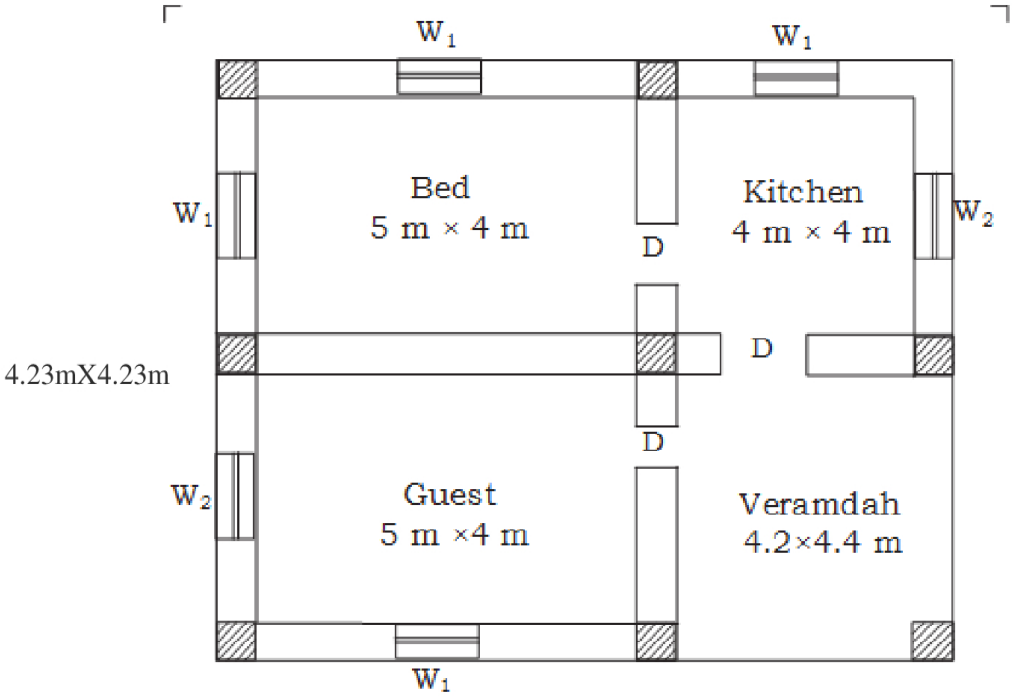

PLAN

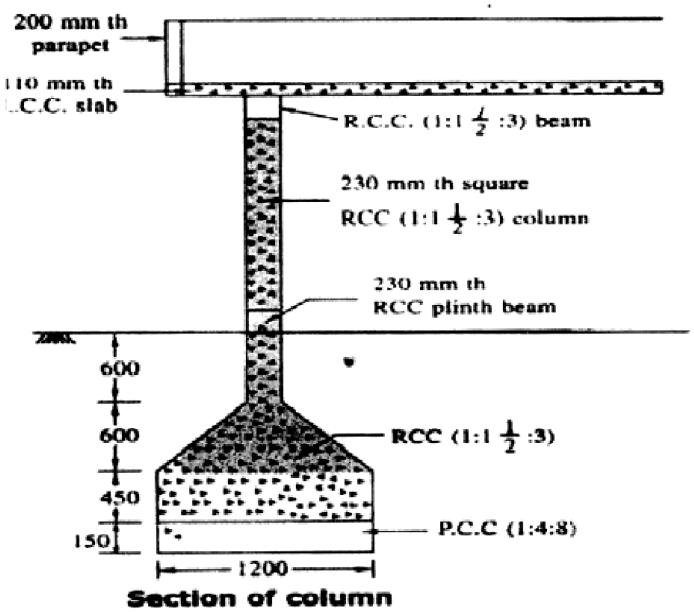

Section of column

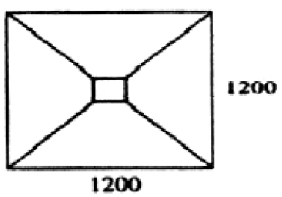

Plan of column

12. Prepare the detailed estimate for the following items of work from the plan and section shown in the Fig. below

(a) Flooring with polished stones

(b) Plastering in CM (1: 4) for external walls including parapet without deductions

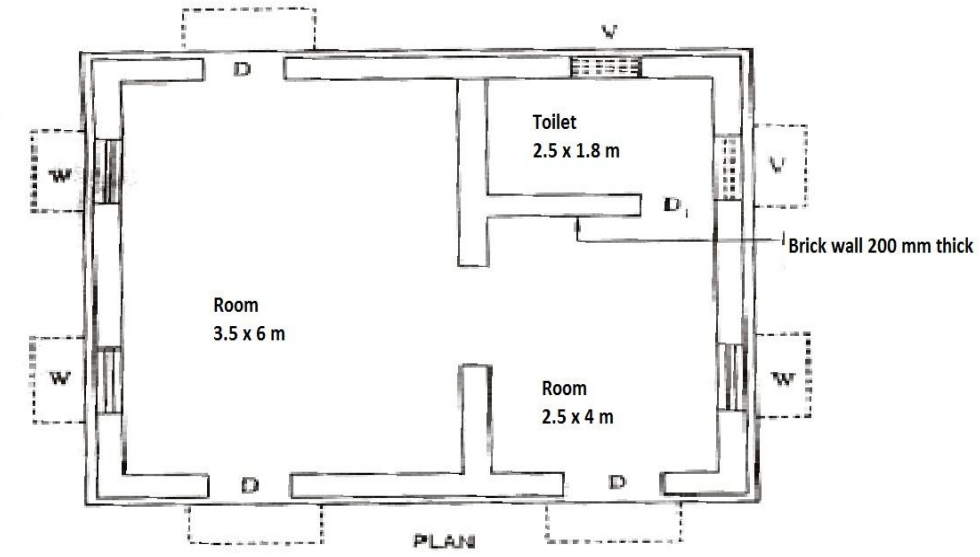

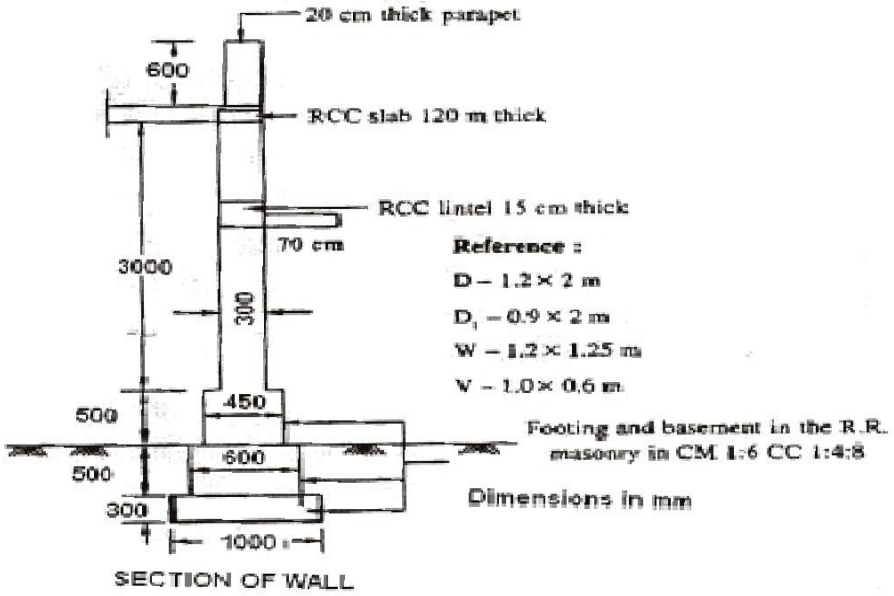

13. Prepare the data sheet and calculate the cost of items given below:
(a) Cement concrete (1:4:8) using 40 mm HBG metal unit—1m^3
(b) RR masonry in CM (1:6) unit—1m^3
Materials and labour required:

CC (1:4:8) using 40 HBG metal—1cu.m

0.92m^3 40 mm HBG metal
0·46m^3 Sand
0·115m^3 Cement
0·2 nos. Mason
3·2 nos. Mazdoors
LS Sundries

RR masonry in CM (1:6)—1 cu.m.

1.1m^3 Rough stone
0·34m^3 CM (1:6)
1·8 nos. Mason
2·8 nos. Mazdoors
LS Sundries

Lead statement of materials:

Sl.No.	Materials	Rate at source(inRs)	Leads(in km)	Conveyancechanges/km
1	40 mm HBG metal	500 per m^3	10km	Rs. 2 per km/ m^3
2.	Sand	90 per m^3	8 km	Rs. 2 per km/ m^3
3.	Rough stone	180 per m^3	5 km	Rs. 3 per km/ m^3
4.	Cement	3200 per MT	Local —	

Labour charges :
(i) Mason first class Rs. 223·00 per day
(ii) Mason second class Rs. 217·00 per day
(iii) Mazdoor Rs. 212·00 per day
(iv) Hand mixing charges of cement mortar Rs. 34·00 per m^3

14. Prepare the data sheet and calculate the cost for the following items of work.

(a) RR masonry with CM (1: 8) unit—1 m^3

1·05 m^3 Rough stone
0·34 m^3 CM (1: 8)
1·8 no. Mason
2·8 nos. Men mazdoor
LS Sundries

(b) Pointing to RR masonry in CM (1: 5) unit—10 m^2

0·09 m^3 CM (1: 5)
2·28 nos. Mason
0·5 nos. Men mazdoor
1·1 nos. Women mazdoor
LS Sundries

Lead statement of materials :

Sl.No	Materials	Rate at source(in Rs)	Leads(in km)	Conveyancecharges/km
1	Rough stone	320/ m3	15 km	4·00/m3/Km
2	Sand	95/ m3	10 km	3·00/ m3/Km
3	Cement	2,500/10 kN	(1 tonne)	At site

Labour charges :
Mason Rs 225·00/day
Men mazdoor Rs180·00/day
Women mazdoor Rs 180·00/day
Mixing charges for CM Rs 40·00/m^3

15. The ground level along the contour lines of a road are given below.

Chainage in m	0	20	40	60	80	100	120	140	160
G.L in m	30.8	31.25	31.85	32.25	33.00	33.65	34.50	34.85	35.50

The formation level at chainage zero is 32.00 m &having rising gradient of 1 in 120. The transverse slope of the ground is level, calculate the volume of earth work by prismoidal rule

16. Prepare the detailed estimate for the cement concrete road of 1.50 km length for the following items of work as shown in the figure below :
(i) Wearing coat of CC (1:2:4) with 20 mm size HBG metal 100 mm thick
(ii) Base coarse of CC (1:4:8) with 40 mm size HBG metal 150 mm thick.

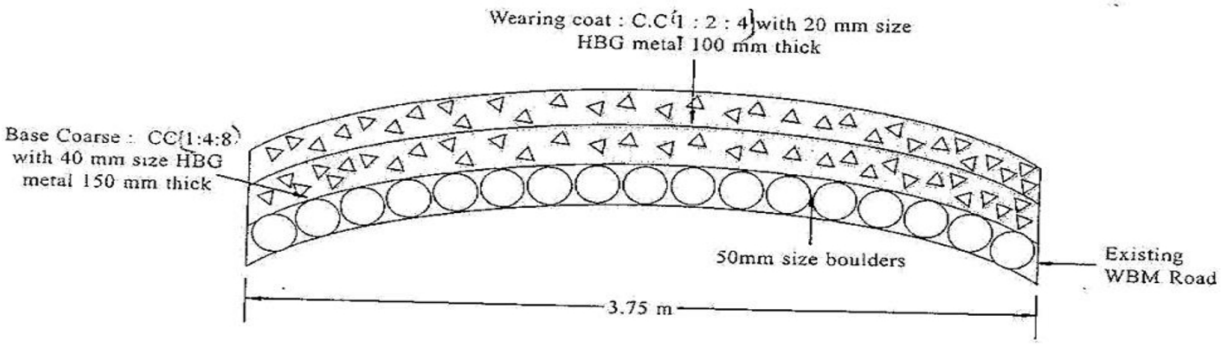

Prepare the detailed estimate for the following items of work for a slab culvert shown in the figure :
(a) Earth work excavation for foundation for abutments and returns.
(b) CC (1:4:8) for abutment and returns.
(c) RCC (1:2:4) for deck slab.

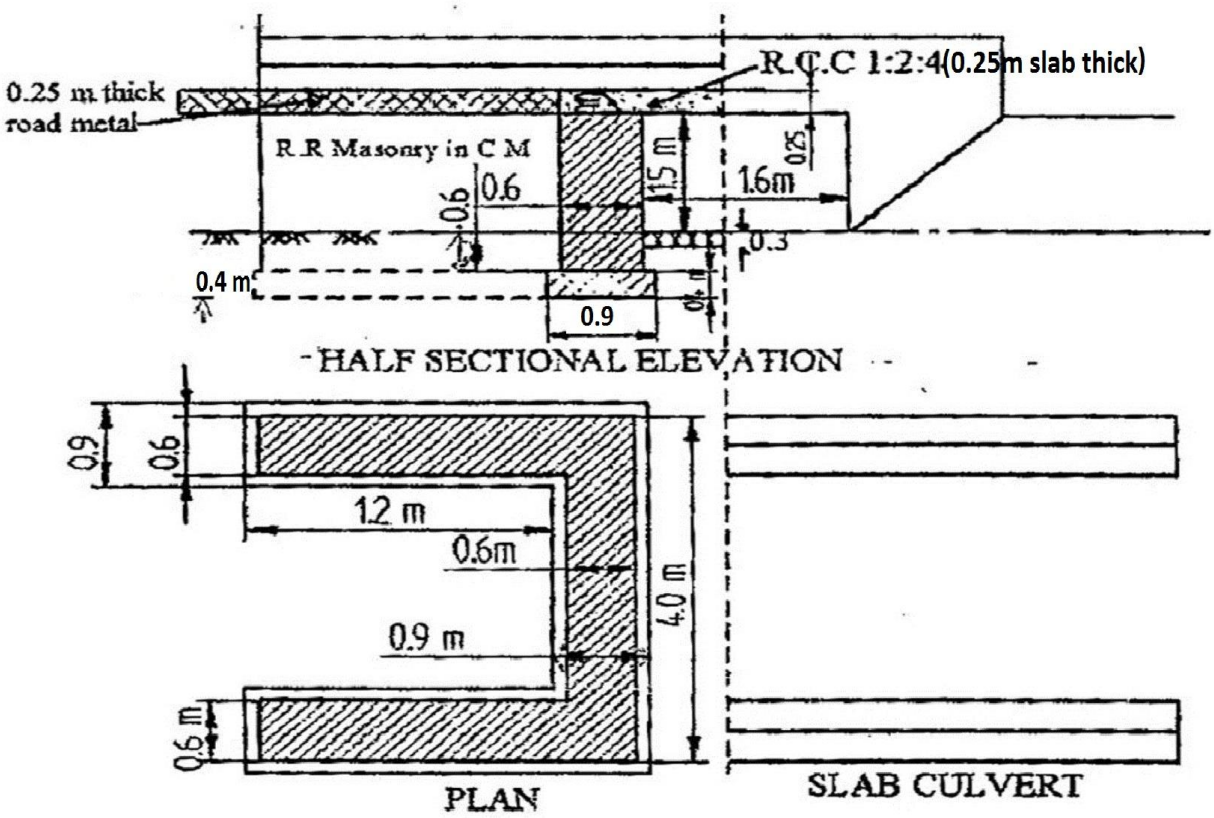

18. Residential building Construction 12 year ago is situated on plot whose total area is 500m^2. The plinth area of the building is 300m^2. The present cost of construction of the building is RS 3,30,00/- and the cost of the land is RS 210/-m^2. The rate of depreciation for the value of the building is 2%. Calculation to total value of property