6239

BOARD DIPLOMA EXAMINATION
MARCH/APRIL - 2019
DIPLOMA IN ELECTRICAL AND ELECTRONICS ENGINEERING
ELECTRICAL CIRCUITS
THIRD SEMESTER EXAMINATION

Time: 3 Hours **Total Marks: 80**

PART - A (3m x 10 = 30m)

Note 1:Answer all questions and each question carries 3 marks

2:Answers should be brief and straight to the point and shall not exceed 5 simple sentences

1. State the principle of basic Potentiometer
2. Find the equivalent star connected resistance of a given delta connected load with R_{AB}=10 Ω, R_{BC}=20 Ω,R_{CA}=30 Ω
3. Define the following terms of an Electric network
   a)Lumped parameters b)Unilateral Circuit
4. Convert the voltage source in the below figure into current sources

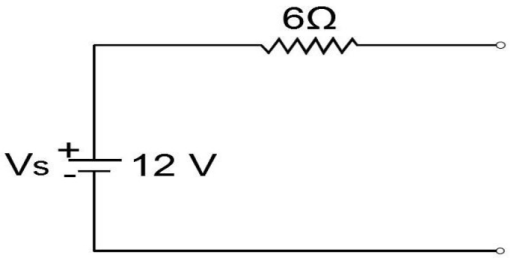

5. Define the terms relating to an alternating quantity
   i) leading ii) lagging
6. A R-C series circuit has an impedance of 30Ω and the current lead the voltage by 60°. Calculate the resistance and capacitance of the circuit
7. The current flowing through a pure inductor is 25A. Find the inductance and power consumption when the voltage applied across the inductor is V=150sin314t volts
8. Define Q factor for a parallel resonant circuit
9. A 3phase, 415V 50HZ supply is given to a balanced delta connected load. The current in each branch circuit is 30A and phase angle is 30° lag find
   (i) The line current (ii) Total power

10. The phase voltage of 3 Phase, 5MVA star connected Alternator is 6500 volts calculate.

(i) The line voltage (ii) Full load line current of the alternator

PART - B (10m x 5 = 50m)

Note 1:Answer any five questions and each question carries 10 marks

2:The answers should be comprehensive and the criteria for valuation is the content but not the length of the answer

11. Explain the method of measurement of earth resistance using Earth Megger

12. Find the current supplied by the battery to the network shown in fig

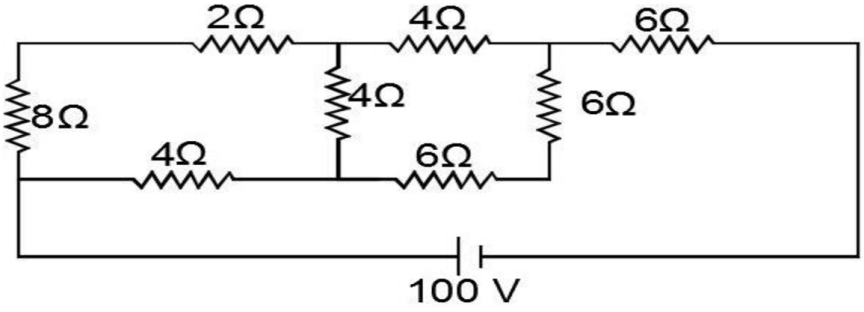

13. An alternating voltage V=200sin314t is applied to a device which offers an ohmic resistance of 20Ω to the flow of current in one direction while entirely preventing the flow of current in the opposite direction. Calculation the R.M.S value , Average value and form factor

14. A coil having a resistance of 6Ω and an inductance if 0.8mH is connected in series with a capacitor having a capacitance of 50μf. A.C. supply of 230V,50Hz is applied across the circuit. Calculate

i) Inductive reactance ii) capacitance reactance iii) total impedance

iv) current v) power consumed

15. a) A series R-L circuits whose resistance is 10Ω, inductance 0.1H is connected across a 230V,50Hz supply. Find i)inductive reactance ii)impedance iii)current

b)A R-L series circuit has an inductance of 0.04H and an impedance of 40Ω with sinusoidal applied voltage. The current lags behind the voltage by 60°. Calculate the frequency of the alternating voltage

16. a) Explain resonance in parallel circuits and derive an expression for resonance frequency.

    b) A coil has an inductive reactance of 20Ω at 50Hz and its p.f is 0.8. Determine the value of the capacitor to be shunted with the coil to produce resonance at 100Hz, also calculate the Q-factor of the circuit

17. a) When the three identical coils are supplied with 440 v, 50Hz, 3 phase supply, the single phase wattmeter whose current coil is connected in line (R- Phase) and pressure coil across phase R & neutral reads 6Kw and the ammeter connected in R phase reads 30A.find

    i)Resistance & Reactance of the coil

    ii)Power factor of the load

18A. Find the currents in 3 Ω resistor in the network shown below using super position theorem

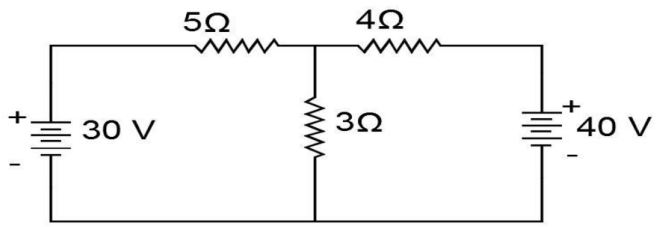

B. Derive the equation for Power factor of the three phase load using Two wattmeter method

- xxx -